This is a digital copy of a book that was preserved for generations on library shelves before it was carefully scanned by Google as part of a project to make the world's books discoverable online.

It has survived long enough for the copyright to expire and the book to enter the public domain. A public domain book is one that was never subject to copyright or whose legal copyright term has expired. Whether a book is in the public domain may vary country to country. Public domain books are our gateways to the past, representing a wealth of history, culture and knowledge that's often difficult to discover.

Marks, notations and other marginalia present in the original volume will appear in this file - a reminder of this book's long journey from the publisher to a library and finally to you.

Usage guidelines

Google is proud to partner with libraries to digitize public domain materials and make them widely accessible. Public domain books belong to the public and we are merely their custodians. Nevertheless, this work is expensive, so in order to keep providing this resource, we have taken steps to prevent abuse by commercial parties, including placing technical restrictions on automated querying.

We also ask that you:

+ *Make non-commercial use of the files* We designed Google Book Search for use by individuals, and we request that you use these files for personal, non-commercial purposes.

+ *Refrain from automated querying* Do not send automated queries of any sort to Google's system: If you are conducting research on machine translation, optical character recognition or other areas where access to a large amount of text is helpful, please contact us. We encourage the use of public domain materials for these purposes and may be able to help.

+ *Maintain attribution* The Google "watermark" you see on each file is essential for informing people about this project and helping them find additional materials through Google Book Search. Please do not remove it.

+ *Keep it legal* Whatever your use, remember that you are responsible for ensuring that what you are doing is legal. Do not assume that just because we believe a book is in the public domain for users in the United States, that the work is also in the public domain for users in other countries. Whether a book is still in copyright varies from country to country, and we can't offer guidance on whether any specific use of any specific book is allowed. Please do not assume that a book's appearance in Google Book Search means it can be used in any manner anywhere in the world. Copyright infringement liability can be quite severe.

About Google Book Search

Google's mission is to organize the world's information and to make it universally accessible and useful. Google Book Search helps readers discover the world's books while helping authors and publishers reach new audiences. You can search through the full text of this book on the web at http://books.google.com/

T
7
.I6
v.1-

INTERNATIONAL LIBRARY OF TECHNOLOGY

A SERIES OF TEXTBOOKS FOR PERSONS ENGAGED IN THE ENGINEERING PROFESSIONS AND TRADES OR FOR THOSE WHO DESIRE INFORMATION CONCERNING THEM. FULLY ILLUSTRATED AND CONTAINING NUMEROUS PRACTICAL EXAMPLES AND THEIR SOLUTIONS

LATHE WORK
PLANER WORK
SHAPER AND SLOTTER WORK
DRILLING AND BORING
MILLING MACHINES

SCRANTON:
INTERNATIONAL TEXTBOOK COMPANY

I-B

Copyright, 1901, by THE COLLIERY ENGINEER COMPANY.
Copyright, 1903, by INTERNATIONAL TEXTBOOK COMPANY.

Entered at Stationers' Hall, London.

Lathe Work, Parts 1-5: Copyright, 1901, by THE COLLIERY ENGINEER COMPANY. Entered at Stationers' Hall, London.

Lathe Work, Parts 2 and 4: Copyright, 1903, by INTERNATIONAL TEXTBOOK COMPANY. Entered at Stationers' Hall, London.

Planer Work: Copyright, 1901, by THE COLLIERY ENGINEER COMPANY. Copyright, 1903, by INTERNATIONAL TEXTBOOK COMPANY. Entered at Stationers' Hall, London.

Shaper and Slotter Work: Copyright, 1901, by THE COLLIERY ENGINEER COMPANY. Copyright, 1903, by INTERNATIONAL TEXTBOOK COMPANY. Entered at Stationers' Hall, London.

Drilling and Boring, Parts 1-3: Copyright, 1901, by THE COLLIERY ENGINEER COMPANY. Entered at Stationers' Hall, London.

Drilling and Boring, Part 3: Copyright, 1903, by INTERNATIONAL TEXTBOOK COMPANY. Entered at Stationers' Hall, London.

Milling-Machine Work, Parts 1-4: Copyright, 1901, by THE COLLIERY ENGINEER COMPANY. Entered at Stationers' Hall, London.

Milling-Machine Work, Parts 3-5 Copyright, 1903, by INTERNATIONAL TEXTBOOK COMPANY. Entered at Stationers' Hall, London.

All rights reserved.

*lt*1B*a*

BURR PRINTING HOUSE,
FRANKFORT AND JACOB STREETS,
NEW YORK.

PREFACE

The International Library of Technology is the outgrowth of a large and increasing demand that has arisen for the Reference Libraries of the International Correspondence Schools on the part of those who are not students of the Schools. As the volumes composing this Library are all printed from the same plates used in printing the Reference Libraries above mentioned, a few words are necessary regarding the scope and purpose of the instruction imparted to the students of—and the class of students taught by—these Schools, in order to afford a clear understanding of their salient and unique features.

The only requirement for admission to any of the courses offered by the International Correspondence Schools is that the applicant shall be able to read the English language and to write it sufficiently well to make his written answers to the questions asked him intelligible. Each course is complete in itself, and no textbooks are required other than those prepared by the Schools for the particular course selected. The students themselves are from every class, trade, and profession and from every country; they are, almost without exception, busily engaged in some vocation, and can spare but little time for study, and that usually outside of their regular working hours. The information desired is such as can be immediately applied in practice, so that the student may be enabled to exchange his present vocation for a more congenial one or to rise to a higher level in the one he now pursues. Furthermore, he

wishes to obtain a good working knowledge of the subjects treated in the shortest time and in the most direct manner possible.

In meeting these requirements, we have produced a set of books that in many respects, and particularly in the general plan followed, are absolutely unique. In the majority of subjects treated the knowledge of mathematics required is limited to the simplest principles of arithmetic and mensuration, and in no case is any greater knowledge of mathematics needed than the simplest elementary principles of algebra, geometry, and trigonometry, with a thorough, practical acquaintance with the use of the logarithmic table. To effect this result, derivations of rules and formulas are omitted, but thorough and complete instructions are given regarding how, when, and under what circumstances any particular rule, formula, or process should be applied; and whenever possible one or more examples, such as would be likely to arise in actual practice —together with their solutions—are given to illustrate and explain its application.

In preparing these textbooks, it has been our constant endeavor to view the matter from the student's standpoint, and to try and anticipate everything that would cause him trouble. The utmost pains have been taken to avoid and correct any and all ambiguous expressions—both those due to faulty rhetoric and those due to insufficiency of statement or explanation. As the best way to make a statement, explanation, or description clear is to give a picture or a diagram in connection with it, illustrations have been used almost without limit. The illustrations have in all cases been adapted to the requirements of the text, and projections and sections or outline, partially shaded, or full-shaded perspectives have been used, according to which will best produce the desired results. Half-tones have been used rather sparingly, except in those cases where the general effect is desired rather than the actual details.

It is obvious that books prepared along the lines mentioned must not only be clear and concise beyond anything

heretofore attempted, but they must also possess unequaled value for reference purposes. They not only give the maximum of information in a minimum space, but this information is so ingeniously arranged and correlated, and the indexes are so full and complete, that it can at once be made available to the reader. The numerous examples and explanatory remarks, together with the absence of long demonstrations and abstruse mathematical calculations, are of great assistance in helping one to select the proper formula, method, or process and in teaching him how and when it should be used.

Four of the volumes of this library are devoted to subjects pertaining to shop and foundry practice. The present volume, the first of the series, treats on the following subjects: lathe work, planer work, shaper and slotter work, drilling and boring, and milling machines. The subjects named have been treated from the standpoint of the man running the various tools described, and the text is therefore suited not only to the wants of the apprentice and the journeyman, but meets fully the requirements of the foreman, superintendent, or any one else desiring an intimate knowledge of the operation of machine tools. This volume, together with the others on shop and foundry practice, will prove of great value to all persons engaged in handling, operating, manufacturing, or designing machinery.

The method of numbering the pages, cuts, articles, etc. is such that each subject or part, when the subject is divided into two or more parts, is complete in itself; hence, in order to make the index intelligible, it was necessary to give each subject or part a number. This number is placed at the top of each page, on the headline, opposite the page number; and to distinguish it from the page number it is preceded by the printer's section mark (§). Consequently, a reference such as § 37, page 26, will be readily found by looking along the inside edges of the headlines until § 37 is found, and then through § 37 until page 26 is found.

INTERNATIONAL TEXTBOOK COMPANY.

CONTENTS

LATHE WORK	Section	Page
Historical	3	1
Classes of Lathes	3	3
The Engine Lathe	3	3
Plain Cylindrical Turning	3	11
Centering	3	12
Squaring the Ends of Work	3	18
Turning to a Diameter	3	24
Taper Turning	3	32
Taper Attachment	3	41
Boring in the Lathe	4	1
Use of Chucks	4	4
Measuring Bored Holes	4	13
Chucking Tools	4	14
Boring Bars	4	20
Boring a Taper	4	25
Radial Facing	4	26
Screw Cutting	4	29
Shapes of Screw Threads	4	32
Standard Threads	4	36
Cutting Screw Threads	4	41
Bolt Cutters	4	43
Cutting Screws on the Lathe	4	47
The Threading Tool	4	59
Special Threads	4	5
Cutting Double or Triple Threads	5	11
Inside Screw Cutting	5	12
Threading Tapered Work	5	15

LATHE WORK—*Continued*	*Section*	*Page*
Theory of Cutting Tools	5	19
Shape of Cutting Tools	5	25
Side Rake	5	29
Forms of Cutting Tool	5	33
Toolholders	5	37
Hand Tools	5	47
Tool Grinders	5	49
Cutting Speeds	6	1
Cutting Feed	6	10
Errors in Lathe Work	6	16
Spring of Lathe Tools	6	16
Spring of the Work	6	20
Spring Due to Methods of Driving	6	21
Lathe Centers	6	26
Errors in Screw Cutting	6	30
Sliding Fits	6	33
Driving Fits	6	35
Forced Fits	6	36
Shrinking Fits	6	38
Arbors or Mandrels	6	40
Ball Turning	6	50
Turning Cranks	6	50
Turning Ovals	6	53
The Turret Lathe	7	1
Hand Screw Machine	7	3
Turret Tools and Their Uses	7	5
Monitor Lathes	7	22
Special Forms of Turret Lathe	7	24
Automatic Screw Machines	7	31
Special Forms of Lathes	7	32
Polishing	7	42
Filing	7	43
Use of Emery	7	45
Use of Steady Rest	7	47
Follower Rests	7	49
Straightening Work	7	51
Using a Rotating Tool	7	55

	Section	Page
Planer Work		
Work of the Planer	8	1
The Planing Machine	8	1
Fastening Work to the Platen	8	7
Planer Tools	9	1
Planer Operations	9	9
Cutting Speed of the Planer	9	20
Accuracy of Planer Work	9	24
Special Planer Work	9	28
Open-Side Planers	9	41
Shaper and Slotter Work		
The Shaper	9	45
Classes of Shapers	9	46
Column Shapers	9	46
Traveling-Head Shaper	9	50
Shaper Operations	9	53
Shaper Tools	9	54
Holding the Work	9	54
Taking the Cut	9	55
Spring of the Machine and Work	9	60
The Draw-Cut Shaper	9	61
Open-Side Plate Planer	9	62
Shapers for Special Work	9	64
The Slotting Machine	9	68
Slotting Operations	9	70
Examples of Slotter Work	9	75
Keyway Cutters	9	79
Drilling and Boring		
Drilling	10	1
Development From the Lathe	10	2
Essential Parts of Drilling Machines	10	3
Principal Functions of Drilling Machines	10	4
Forms of Tools and Their Uses	10	6
Drilling Tools	10	6
Machine-Shop Drills	10	9
Lubrication of Drills	10	18

Drilling and Boring—*Continued*	*Section*	*Page*
Reamers	10	20
Countersinks	10	28
Counterbores	10	30
Spot Facing	10	33
Taps	10	34
Devices for Holding Tools	10	35
Securing Work to the Table of the Simple Drilling Machine	10	42
Types of Drilling Machines and Their Uses	11	1
Boring Machines	11	23
Horizontal Drilling and Boring Machines	11	29
Cylinder Boring	11	40
Boring Spherical Bearings	11	44
Drilling-Machine Operations	12	1
Lubricating	12	7
Drill Grinding	12	8
Drilling and Boring Jigs and Fixtures	12	11
Miscellaneous Tools and Fixtures	12	24
Tables	12	29
Morse Taper Shank	12	30
Morse Tapers	12	31
Speed and Feed of Drills	12	32
Cutting Speeds	12	33
Tap Drills	12	34
Twist Drills for Pipe Taps	12	35
Recent Tests of Twist Drills	12	35
Milling-Machine Work		
Definitions	13	1
Construction of Machine	13	4
Advantages of Milling Machines	13	9
Milling Cutters	13	10
Classification of Cutters	13	10
Construction of Cutters	13	11
Face Milling Cutters	13	11
Side Milling Cutters	13	18

MILLING-MACHINE WORK—*Continued*	*Section*	*Page*
Angular Milling Cutters	13	23
End Milling Cutters	13	25
Form Milling Cutters	13	26
Care of Milling Cutters	13	30
Holding Cutters	13	31
Preparation of Stock	13	39
Cutting Speeds	13	40
Feeds	13	42
Table of Feeds and Speeds	13	45
Lubrication	14	1
Selection of Cutter	14	6
Limitations and Errors	14	10
Holding Work	14	12
Simple Indexing	15	21
Compound Indexing	15	27
Differential Indexing	16	5
Fractional Indexing	16	12
Spiral Work	16	19
Natural Functions	16	37
Special Milling Attachments	16	41
Taking the Cut	16	50
Setting the Machine	16	64
Special Uses of the Milling Machine	16	75
Comparison of Milling Machines	16	79

LATHE WORK.

(PART 1)

THE LATHE.

HISTORICAL.

1. Early Forms of Lathes.—The art of turning, or the production of circular or cylindrical pieces by the aid of a machine and special tools, has long been known. One of the earliest forms of machines of which there is record was one used for this purpose. It consisted of a crude wooden frame in which the piece to be turned was held by pointed wooden or metal pegs passing through the frame and into the ends of the piece. The piece was made to rotate upon these pegs by wrapping a cord or band about one end of the piece. One end of the cord was fastened to a weight or a spring pole, while the other was held by the operator or an assistant. By pulling the cord, the work was made to rotate in one direction, the weight or spring pole pulling it back as soon as the forward pressure was released. The tools for cutting were held in the hand and presented to the work in such a way as to cause them to cut the various shapes desired. These early machines were called **lathes,** and the simple principle that they involved, i. e., of revolving the work upon its axis while being operated upon by the cutting tool, is still the fundamental principle in the most modern lathes.

For notice of copyright, see page immediately following the title page.

2. Slide Rest.—It was not, however, until the invention of the **slide rest** and its application to the lathe, and, subsequently, to other forms of machine tools, that the rapid growth and improvement in machine-tool construction began. The credit for this invention is universally bestowed upon Mr. Henry Maudslay, an Englishman, who was born in the year 1771 and died in 1831. His slide rest was first applied to lathes in 1794.

His method was to fix the cutting tool rigidly in a block that was fitted into a groove or slide in such a manner that it could be moved only in one direction, it being held rigidly against all forces tending to move it in any other direction. A uniform speed or feed along this line of free motion was given by the use of a screw. These few simple principles are the ones still employed, and their use has made possible the rapid improvements and developments in machine construction that have resulted in the wonderfully high type represented in the automatic machines of the present day.

3. Development of Lathes.—The early lathe was more rapidly developed than the other metal-working machines, and consequently was called on to perform many operations that could now be more easily performed on other types of machines. It not only had to perform its own characteristic functions of producing cylindrical, tapered, or conical and radial surfaces, but it had to act in the capacity of drill press, boring mill, milling machine, and grinding machine as well.

These special forms of machines, which are for the most part branches from the original lathe, have now become so fully developed and adapted to their special work that the lathe has been greatly relieved of abnormal duties and can now be used almost exclusively in performing its normal functions. While the lathe is now assuming its particular line of work, it does not follow that its work is less complicated or of less importance; it simply admits of a greater development and a greater amount of skill.

CLASSES OF LATHES.

4. Lathe work probably embraces a greater variety of operations than the work of any other machine, and because of this fact lathes are divided into different sizes and classes specially designed to operate upon some particular class of work. Chief among these classes is the *engine lathe*, which might be considered as the typical metal-workers' lathe. This same type of lathe, when made with particular care and supplied with some extra attachments, is sometimes classed as a *toolmakers' lathe*. Other types of lathes that possess some peculiar characteristic are the *gap lathe*, *axle lathe*, *wheel lathe*, *turret lathe*, *bench* or *precision lathe*, and some other types specially designed for a particular duty, all of which will be described.

In operating any of the above-named lathes, it will be found that the underlying principles necessary for successfully completing a piece of work on any machine are similar, and that if the engine lathe be thoroughly mastered, the others may be successfully handled with a little practice. The principal differences will be found to arise from the size and peculiar shapes of the work.

THE ENGINE LATHE.

GENERAL DESCRIPTION.

5. In discussing the work of the lathe, the standard engine lathe of medium size, from 16-inch to 24-inch swing, will be considered first.

The term **engine lathe** generally indicates that the lathe is driven by some power other than foot power, that the tool motion is controlled by power feeds, and that the lathe is equipped with a leadscrew used for cutting screw threads.

6. Names of Parts.—Fig. 1 represents a standard type of screw-cutting engine lathe with the various parts numbered, and their respective names and duties are as follows:

A A is the bed or shears; *B*, the headstock complete; *C*, the tailstock complete; *D*, the carriage; *F*, the apron; *E*, *E*, the legs; *1*, the live center; *2*, the dead center; *3*, the driving cone; *4*, the driving gear keyed to spindle; *5*, the back gear;

FIG. 1.

6, the handle for throwing the back gears "in" or "out"; *7*, the face plate; *8*, the stud, or spindle; *9*, a feed-cone on stud; *10*, the large feed-cone on feed-rod; *11*, the feed-rod;

12, a change gear on stud used in screw cutting; *13*, a change gear on leadscrew used in screw cutting; *14*, an intermediate gear for connecting gears *12* and *13*; *15*, the leadscrew used in screw cutting; *16*, a hand crank for traversing carriage by hand; *17*, a knob for throwing in automatic feed from feed-rod; *18*, a lever for throwing in automatic feed from leadscrew; *19*, a hand crank for operating cross-slide; *20*, a knob for throwing in automatic cross-feed; *21*, the tool post for holding the cutting tool; *22*, a nut for clamping tailstock to the bed *A*; *23*, a hand wheel for adjusting tailstock spindle and dead center; *24*, a lever in headstock for reversing direction of feed-motion; *25*, a feed-rack securely fastened to the lathe bed; *26*, a handle for operating compound rest cross-feed; and *27*, an adjusting screw for setting over tailstock spindle.

7. The Carriage.—The carriage is divided into two parts. The upper part *D* is called the **saddle.** It is carefully fitted and gibbed to the top of the lathe bed, carries the cross-slide and the tool, and receives all the strain and thrust exerted in cutting the work. The second part *F* is called the **apron.** This is secured to the saddle by screws. It hangs in front of the bed and contains the gearing through which the feed-motion is transmitted from the feed-rod *11* to the feed-rack *25* and the split nut which engages the leadscrew when cutting threads.

8. The Feed.—To operate the **feed** or cause the carriage to move automatically along the lathe bed, the knob *17* is turned, thus operating a friction clutch inside the apron. This operation throws in the feed and power is then transmitted from the stud cone *9* to the feed-rod cone *10* by means of a belt, and so along the rod to the carriage. The direction of the feed-motion may be changed by introducing another gear into the train of gearing either in the apron or in the headstock.

If we have a train of gears, as shown in Fig. 2, in which power is applied to rotate No. *1* in the direction indicated by the arrow, it will be observed that gears Nos. *3* and *5* rotate

in the same direction, while gears Nos. *2* and *4* rotate in the opposite direction. From this we may see that if the number of gears in a train are even, the first and last gears revolve in opposite directions, while if the number of gears are odd, the first and last gears revolve in the same direction.

FIG. 2.

FIG. 3.

Fig. 3 shows an end view of a headstock and the gears by which the direction of the feed-motion is controlled.

Fig. 4 is a detailed end view of the same headstock. Gear No. *1* is keyed to the spindle, while gear No. *3* is keyed to the stud or change-gear spindle *6*. An arm pivoted on the stud spindle *6* carries the gears *2* and *4*. When the handle *5* is up, motion is transmitted from the gear on the headstock spindle, through gear *2* to gear *3* Then, having three gears in the train, the first and last gear have the same direction. When the handle *5* is pushed down, as in Fig. 5,

gear *2* is moved away from gear *1*, and gear *4*, which was before revolving idly, is brought against gear *1*. Motion is then transmitted from gear *1* to *4*, from *4* to *2*, and from *2* to *3*, so that while in this position there are four gears in

FIG. 4. FIG. 5.

the train and the motions of the first and last gears are in opposite directions. In Fig. 1 this same reversing mechanism is used, but the gearing is placed inside the frame of the headstock.

9. The Speed.—The various speeds of the lathe are controlled by the belt running on different steps of the cone *3*, Fig. 1, and by the use of the back gears.

10. The Back Gears.—Fig. 6 is a horizontal section through the headstock, illustrating the operation of the **back gears.** The back gears *b* and *c* are rigidly fixed to the ends of a hollow quill, this quill being supported on an eccentric shaft on brackets at the back of the headstock. By partly rotating this eccentric shaft by means of the hand lever *e*, the back gears *b* and *c* can be brought forwards to engage with the gears *a* and *d*. The cone is fitted to revolve freely on the spindle, and carries with it gear *a*. Gear *d* is keyed to the spindle and revolves with it. When the back gears are out, the cone may be attached to the driving gear *d* by means of a block *f*, which may be moved into a radial slot cut in the end of the cone. When thus connected, the cone and spindle revolve together. When the back gears are to

be used, this block is dropped out of the slot and the cone is again free to revolve on the spindle. The back gears are next brought forwards to engage with the cone and spindle gears. Power is then transmitted from the cone and gear *a* to gears *b* and *c*, and from gear *c* to the driving gear *d*, and so to the spindle. Because of the different sizes of the back gears, the speed is much reduced; the ratio of speed with the

FIG. 6.

back gears out to the speed with the back gears in, the belt remaining on the same step of the cone, is about 10 to 1 on lathes of about 16-inch swing. This change by the introduction of the back gears not only reduces the speed but at the same time increases the power, making it possible to take much deeper cuts on the work.

11. Double and Triple Gearing.—When a greater change of speed is desired than can be obtained with the ordinary set of back gears, a second combination of gears of different ratios is introduced whereby the speed may be reduced still more. When this combination is used, the lathe is said to be double back-geared.

Fig. 7 shows a double back-geared headstock. The gears *b* and *c* are free to slide on a feather on the back-gear shaft, so that when moved to one position, *b* meshes with *a* on the cone spindle, giving one rate of speed. When *b* and *c* are moved to the other end of their seat, *c* meshes with *d*. Gears

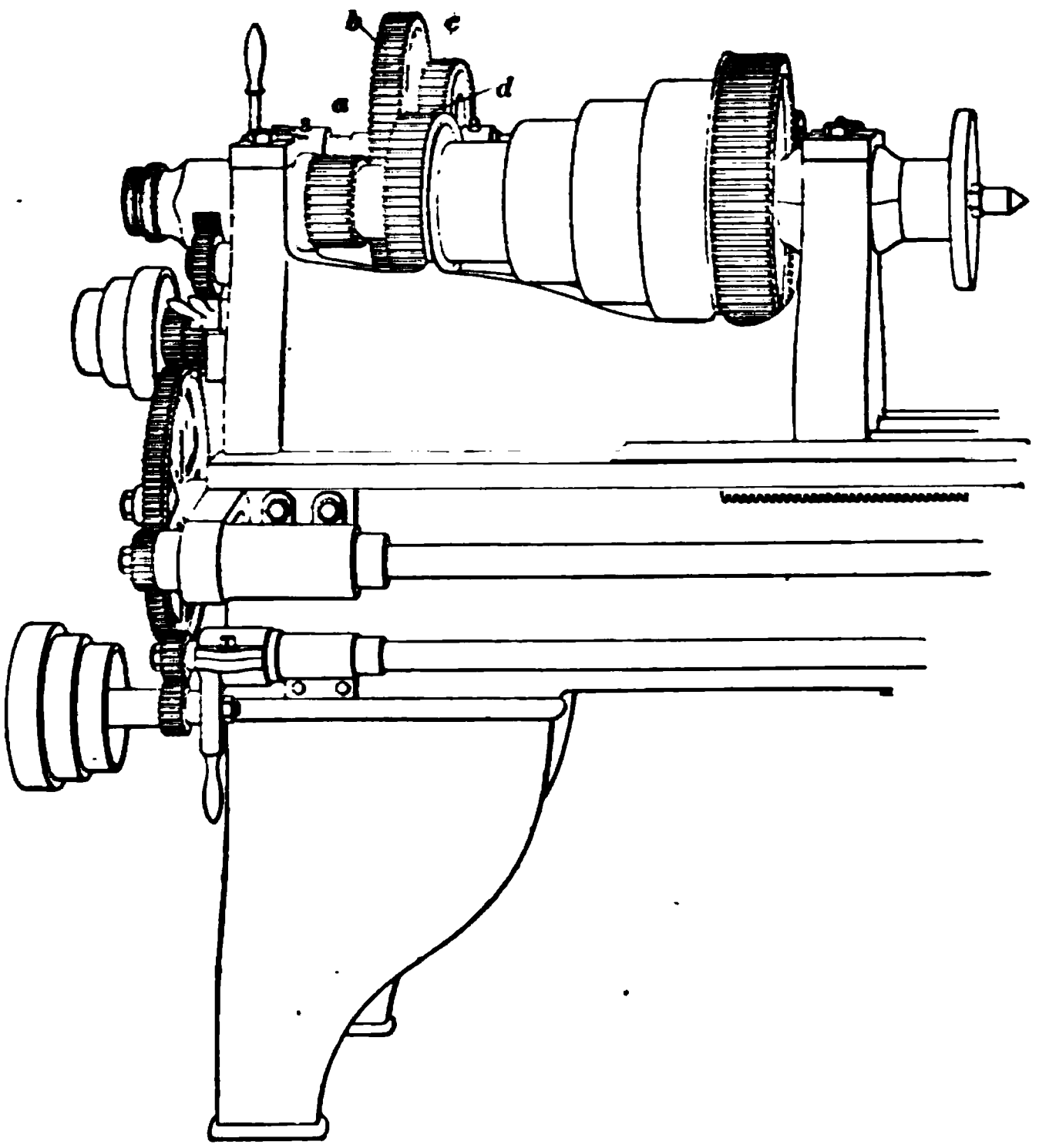

FIG. 7.

c and *d*, being of a different proportion in diameter from *b* and *a*, give a different rate of speed.

On the larger and more powerful lathes, a third combination is used and it is said to be triple geared. Fig. 8 illustrates a gear of this type. The first portion of the gearing is similar to that already described, but the triple gearing is obtained by means of an internal gear *a* attached to the

face plate *b*, which is operated by a pinion on the shaft *d*, thus producing a slow speed.

12. Tailstock. — In the simple engine lathe, as shown in Fig. 1, the tailstock is secured to the bedplate by a clamp bolt *22* and can be moved by loosening this and sliding the tailstock to the desired position by hand. In the case of large lathes, this would be difficult or impossible, and some special method is necessary. In the form shown in Fig. 8, an arm *f* is attached to the tailstock and provided with a hand wheel *e*, which operates the gearing arranged to engage with the rack *j*. By this device the tailstock can easily be moved by hand In some cases, arrangement is made for connecting the traverse mechanism with the leadscrew so that the tailstock may be moved by power. In the form shown in Fig. 1, the tail spindle is moved in or out by means of the hand wheel *23*; but in the form shown in Fig. 8, the

Fig 8

tailstock becomes of such extreme length that it is not always convenient to operate the spindle by the hand wheel *g*, and the auxiliary hand wheel *h* with the shaft *i* and gearing at *k* is provided, thus enabling the operator to control the spindle while he is close to the center.

13. Feed-Screw Supports.—In the case of a small lathe, as shown in Fig. 1, the feed-screw and feed-rod, *15* and *11*, are simply supported at the ends and in the apron. In the case of long or heavy lathes, additional supports, as shown at *l*, Fig. 8, become necessary. Sometimes several of these supports are arranged along the lathe.

14. Tool Posts.—In most lathes, the tool is secured in the ordinary tool post of the form shown at *21*, Fig. 1, and at *n*, Fig. 8, but in large lathes it is sometimes desirable to turn work that cannot be swung over the carriage. In such a case, the device illustrated in Fig. 8 is used. It consists of an auxiliary slide *m* placed at the front end of the carriage, and the tool post *o*. Such a tool post is located considerably below the line of the lathe centers, and, in order to obtain the proper cutting angles for the ordinary tools, the surface upon which the bottom of the tool rests is inclined at such an angle that a plane passing through the bottom of the tool would pass approximately through a line joining the centers.

PLAIN CYLINDRICAL TURNING.

15. Example of Turning.—In discussing this first exercise in lathe work, it may be well to have in mind some particular piece that is to be finished. A plain cast-iron cylinder 12 inches long, 2 inches in diameter, finished round, true, and parallel, according to the drawing, Fig. 9, has been selected. The stock may be 2½ inches in diameter and long enough to "square up" or to have the ends finished smooth when it is the correct

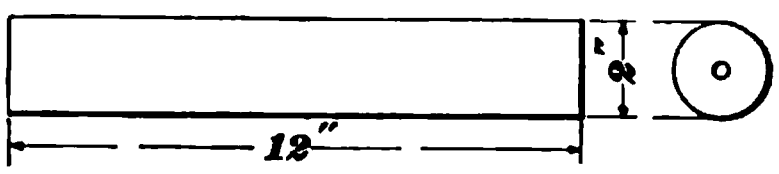

FIG. 9.

size. Work of this character, such as bolts, studs, spindles, shafts, etc., that have been forged, cut from the bar, or cast very near the finished length, is held in the machine between the lathe centers, holes having been previously drilled and reamed in the ends of the work for the reception of the lathe centers.

CENTERING.

LOCATING CENTERS.

16. Centering by Dividers.—The operation of locating, drilling, and reaming the center holes is one of importance and requires careful attention. Various methods are used for locating center holes, depending on the shape of the piece and the number of pieces to be centered. If the stock is round and true, the center may be roughly located by placing the work on a flat surface and using a pair of dividers, set to about half the diameter of the work, for scribing lines on the end, as shown in Fig. 10. To do this, the dividers are drawn across the chalked end of the work, scribing one line; the work is given a quarter revolution and another line is scribed, and so on until there are four lines intersecting, as shown. The center of the inscribed square is approximately the center of the work, provided the dividers were held at the same angle with the work each time a line was scribed. A prick-punch mark made in the center of the square locates the trial center.

FIG. 10.

17. Centering by Surface Gauge.—Instead of the dividers, a **surface gauge** or scriber block may be used for scribing the lines Fig. 11 shows how a surface gauge *a* may be used for centering a bolt *b*. In this piece, it is desirable to make the center true with the stem or shank of

the bolt. The head cannot always be depended on to be forged true with the shank. The bolt is placed in the V's of two blocks *c*, *c*, as shown in Fig. 11. These blocks should

FIG. 11.

hold the bolt high enough from the bench or table so that the head will not touch when the bolt is revolved in the V's. The scriber point of the surface gauge is then set to about the center of the work and the four lines are scribed, intersecting as shown.

18. Centering by Hermaphrodites. — Another method of locating the center is by the use of hermaphrodites, as shown in Fig. 12. The hermaphrodites are set so that the pointed leg comes near the center of the work. With the other leg at the respective points *a*, *b*, *c*, and *d*, four arcs are scribed, intersecting as shown. The center *e* of this inscribed polygon is the approximate center.

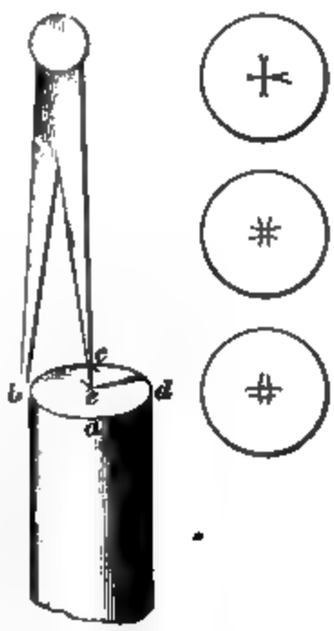

FIG. 12.

19. Centering by Cup Centers. When there are many pieces to be centered, time can be saved in locating the centers by the use of a **cup center,** shown in Fig 13. The conical opening in the end is placed over the end of the work, as shown, and a light blow on

the prick punch *p* with a hammer is sufficient to mark the point. If the end of the work to be centered is untrue, as in Fig. 14, or if the device is not held true on the end, as in Fig. 15, it will not locate the center accurately. The line *a b* shows the center line of the work, and *c d* the center

FIG 13. FIG. 14. FIG. 15. FIG. 16.

line of the punch. Fig. 16 shows a centering device that insures that the punch and the work will be held in line, but does not overcome errors due to untrue ends, as shown in Fig. 14.

20. Testing Location of Centers. — When the "stock," or the rough piece to be finished, is very close to the finished size, it is best to test the accuracy of the location of the centers before they are actually drilled and reamed. This may be done in the case of light work by supporting it between the centers of the lathe, allowing the points of the lathe centers to enter the prick-punch marks made in the ends of the work. While thus supported, the work should be revolved rapidly by drawing the hand quickly across it. While the work is thus spinning on the

center points, chalk is held against it so that the chalk will just touch. If there is an untrue end or a high side, the chalk will mark the high place. Thus, the work is tested and the center mark moved, if necessary, until the work will run with sufficient accuracy to insure the correct location of the centers.

21. Changing Center Marks.—The center marks in the ends may be changed slightly in location by using a prick punch and slanting it in the direction in which it is desired to move the mark, as shown in Fig. 17 (*a*), or the prick punch may be held at one side of the center, as shown at (*b*). In the latter case, the point of the punch will move toward the old center when struck, but will draw the center to one side as desired. When the centers are satisfactorily located, they should be made quite large with the punch for the purpose of making a starting point for the drill. If only a very small mark is made in locating the center, the drill may not start in the desired place but begin drilling at some other point.

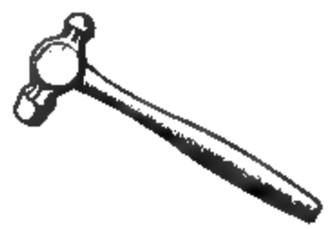

(a) (b)

FIG. 17.

FORMING CENTERS.

22. Centering Machines.—When there are large quantities of work to be centered, much time and expense can be saved by the use of special centering machines. A type of one of these machines is shown in Fig. 18. These machines render the methods of locating centers just described unnecessary. The one illustrated is fitted with a universal chuck *a*, which holds the work to be centered accurately in line with one spindle of the machine. If the

work is long, the end is supported in the V-shaped rest *b*. When in this position, the work is drilled and reamed, there being two spindles, *c* carrying a drill and *d* a reamer, which can be alternately brought in line with the center of the work. After the machine is once adjusted, it will drill and ream all pieces to the same depth and size.

FIG. 18.

23. Drilling and Reaming on the Lathe or Drill Press.—If a centering machine is not at hand, the drilling and reaming may be done on a small sensitive drill press or on a speed lathe. Ordinarily, this operation consists of first drilling a hole from $\frac{1}{16}$ to $\frac{1}{8}$ inch in diameter about $\frac{1}{2}$ inch deep and then reaming the end of the hole with a reamer of the form shown in Fig. 19 (*a*) or Fig. 19 (*b*). This practice has been almost entirely abandoned in the case

of small work by the introduction of the combination drill and reamer shown in Fig. 19 (*c*). This method saves time and insures that the reamed position of the hole will be axially true with the drilled position. This is a very important point when accurate lathe work is to be done.

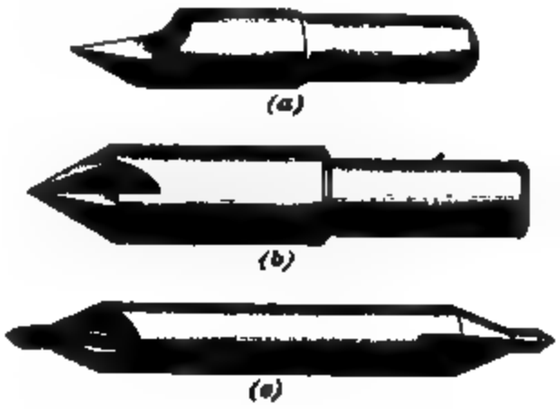

FIG. 19.

24. Correctly Formed Center Holes. Fig. 20 (*a*) shows a section through a properly formed center hole and shows how it should fit the lathe center. It will be noticed that it is reamed to an angle of 60° to fit perfectly the angle of the lathe center; also that the drill hole extends into the work sufficiently deep to prevent the extreme point of the lathe center from bearing against the work.

The practice employed by some workmen of forming the center hole by simply making a very large prick-punch mark into the end of the work is a practice that should not be

FIG. 20.

allowed, since it is impossible to produce accurate work with such center holes; besides, the work will soon wear or break off the points of the lathe centers.

When very large center holes are required for supporting extra heavy pieces, particularly in cast iron, it is an excellent plan to cut several oil channels, as *a*, Fig. 20 (*b*). It is also well to fill the end of the center hole *b* with wool, felt, or picked up waste saturated with oil.

HOLDING WORK BETWEEN CENTERS.

25. Precautions.—After centering, the work is ready for the lathe. A lathe dog, Fig. 21, is slipped on one end of the work, a drop of oil put in the center hole of the other end, and the tailstock adjusted to the proper position for holding the work between the centers. Care must be taken in adjusting the dead center. The proper adjustment is such that the work is free to turn, and at the same time is held so tight that there is no lost motion. The operator must also see that the tail of the dog fits loosely in the notch

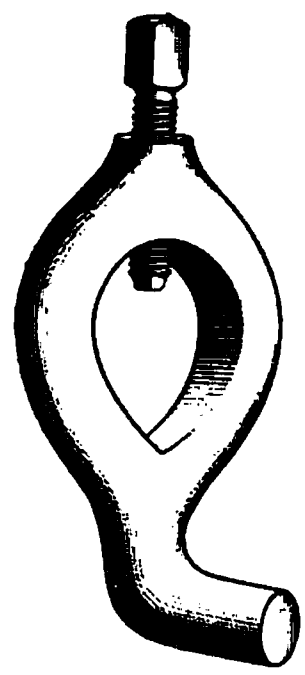

FIG. 21.

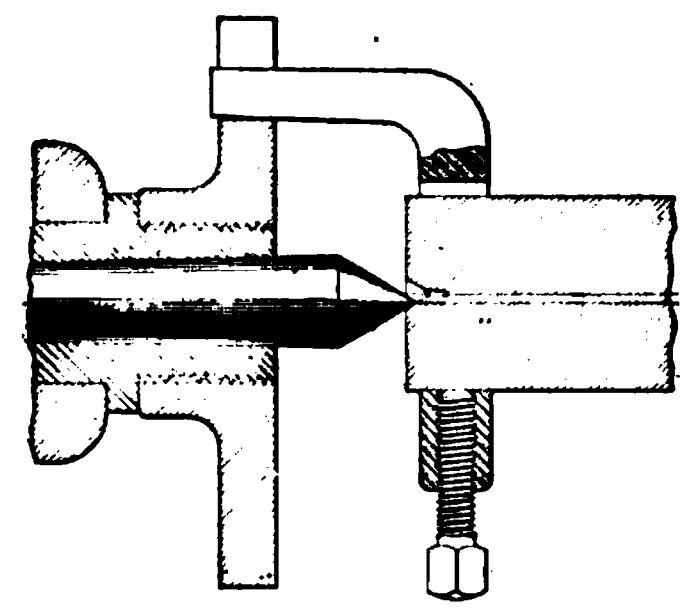

FIG. 22.

of the face plate. Sometimes the tail of the dog pinches in the face plate in such a manner as to hold the work off from the live center, as shown in Fig. 22. This prevents the work from running true. In adjusting the tailstock on the bed, it should be clamped in such a position that it will not be necessary to run the tailstock spindle out very far to reach the work, as greater rigidity is secured by keeping the spindle well in the tailstock.

SQUARING THE ENDS.

26. All work turned between the centers of a lathe should have its ends "squared up" or made flat and true before attempting to turn the cylindrical surfaces.

THE TOOL.

27. Side Tool.—The tool used for this kind of work is shown in Fig. 23 and is known as a right-hand **side tool** or **knife tool.**

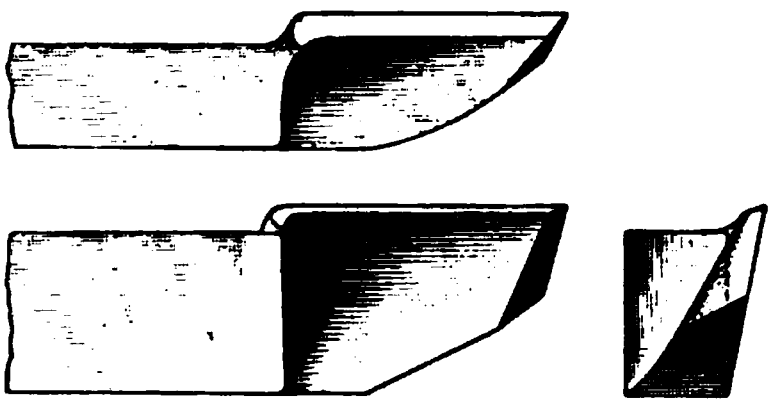

FIG. 23.

28. Grinding the Tool.—Lathe tools are ground for two purposes: *first*, to secure the desired form and shape; and, *second*, to make the tool sharp. After a tool is once correctly shaped, there should be as little grinding as possible, in order that the original shape may be preserved. Much grinding needlessly wears away the tool. Fig. 24 shows an end view of a side tool correctly shaped and illustrates how it is presented to the work as seen from the back of the lathe. The cutting edge of the tool is at the center of the work. It will be noticed that the face of the tool *A B* is ground flat and at an angle to the line *C D*, which is parallel to the side of the shank. This angle, formed by the

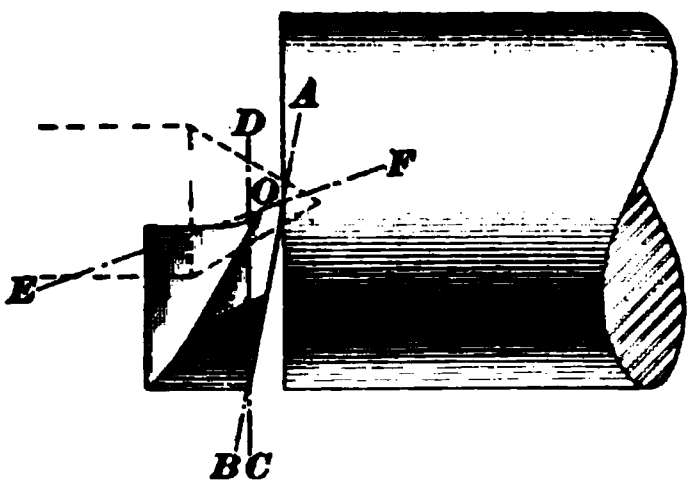

FIG. 24.

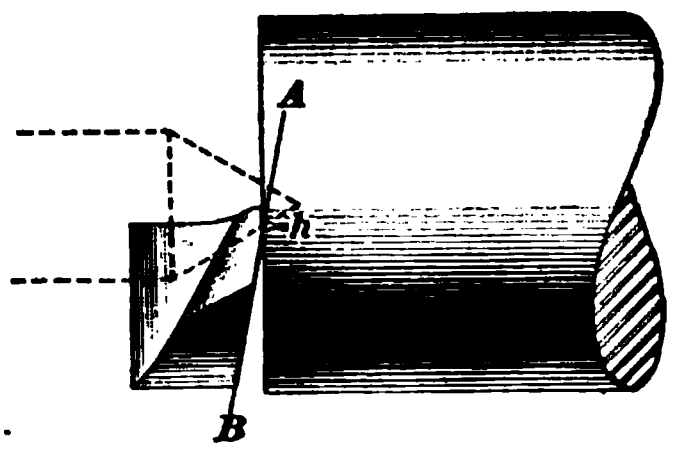

FIG. 25.

lines *A B* and *C D*, is the angle of side rake. The top face denoted by the line *E F* is usually ground to make an angle with the face *A B* of about 60° for cast iron and 55° for wrought iron or soft steel. When sharpening the tool, the most grinding should be done on the top face *E F*, care being taken to preserve the original shape of the tool. Fig. 25 shows how a careless workman may round the face *A B* of the tool in attempting to make the cutting edge sharp, with

the result that the tool cannot cut because of the high place *h*, which touches the face of the work first. After a tool is ground on an emery wheel or grindstone, it should be sharpened by the use of an oilstone, to give it a keen edge.

SETTING THE TOOL.

29. General Considerations.—For roughing cuts, the tool should be clamped in the tool post so that the cutting edge *A B*, Fig. 26, makes an angle of from 10° to 15° with the end of the work. The tool should be clamped as close to the cutting edge as possible, in order to give rigidity to the tool. The tool should be adjusted for height, so that the cutting edge is level with the center of the work.

FIG. 26.

30. Rise-and-Fall Rest.—Various means are adopted for adjusting the height of the tool, depending on the style of lathe and carriage. Fig. 27 shows a very common form used on small sizes of lathes. This is known as the **rise-and-fall rest.** The rest is composed of two parts, one *a* resting on the bed of the lathe, while the upper part *b* is hinged at the points *p*, *p*, and carries the tool block. By means of the adjusting screw *s*, this upper part may be raised or lowered and the tool set at any desired height. This is one of the most convenient forms of tool rest used for small work. A weight is frequently attached to the under side of *b* by a link passing through *a*. The

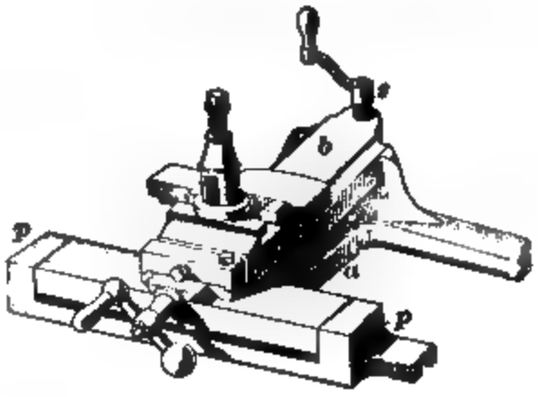

FIG. 27.

weight should be heavy enough to hold the top part down. Lathes fitted up in this manner are called **weighted-rest lathes.**

31. Plain Rest.—Fig. 28 represents another type of tool rest, known as the **plain rest.** This style is used principally on the larger lathes. In this type, the height of the tool point is adjusted before clamping in the tool post, by means of wedges, washers, or rings under the tool, as described in the following articles.

32. Adjustments for Height of Tool.—Fig. 29 (*a*) shows one style of adjustment commonly used. The tool rests on a chip *a*, which is convex on its under side. This chip fits the top of a concave ring *b*, which rests on the tool block. The tool point *o* can be set at any height within given limits, and the chip *a* under the tool will rock to a position that will give a flat bearing for the tool.

FIG. 28.

(a)

FIG 29.

Fig. 29 (*b*) shows another method of adjusting the height of the tool. The nut *n* is threaded and fitted to the thimble *b*,

which fits over the tool post. By rotating the nut *n*, the thimble *b* may be raised or lowered to any desired position. This form has an advantage over the style previously described in that it gives a level or flat bearing for the tool and keeps it in a horizontal position at all times. There are numerous other styles of tool-post adjustment that vary little in principle and accomplish the same purpose.

TAKING THE CUT.

33. Classification of Cuts.—On all machine work there are two classes of cuts used, namely, the *roughing cut* and the *finishing cut.* The roughing cut is, as its name implies, the first heavy cut taken over the work for the purpose of blocking out or roughing the work very close to size, the object being to remove the excessive metal in the shortest possible time. Roughing cuts are therefore made as heavy and as deep as the machine will drive. The finishing cut is the last cut taken on the piece and is intended for finishing the work to exact size and at the same time making it smooth and true. In order to obtain these results, the tool must be very sharp and keen.

34. Roughing Cuts.—When using the side tool, the cut is started at the center of the work. The tool is moved sidewise by moving the carriage by hand until the tool has a deep cut—deep enough to cut well under the skin and scale if the stock is cast iron. The tool is held in this position by holding the carriage still, while being drawn from the center by means of the cross-slide. These operations are repeated until the desired amount of metal is cut from the end. If much is cut from one end, a burr will be left around the center hole, as shown at *b*, Fig. 30. This burr may easily be removed by using the point of the tool, after having first loosened the

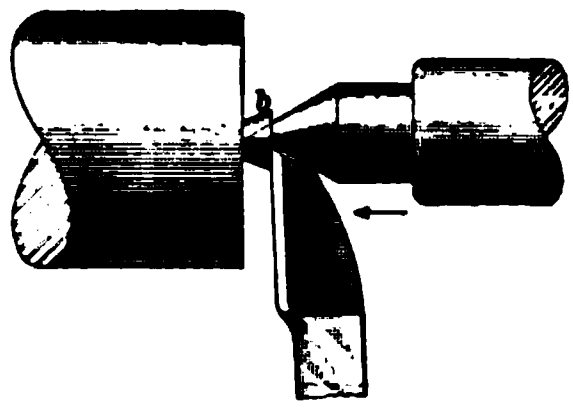

FIG. 30.

dead center to admit the tool, as shown. The tool is fed sidewise, in the direction of the arrow, by hand, and, at the same time, the dead center is fed in, to keep the work from dropping off. This will cause chips and shavings to get into the center hole, which should be carefully removed before any turning is done along the cylindrical surface of the work. After each end is roughed off and the piece is very close to length, the center holes should again be drilled and reamed, if necessary, to make them of the proper size to stand the strain when taking the heavy cuts on the outside.

35. Finishing Cuts.—Before taking a finishing cut, the tool should be reground if necessary and then made keen and sharp with an oilstone. In order to make the cuts smooth, it is better, in grinding, to slightly curve the edge

FIG. 31

FIG. 32.

of the tool near the point, as shown in Fig. 31. The tool is set the same as for roughing cuts, with the exception that the cutting edge makes such an angle that the end of the work is flat or tangent to this curve at the point of the tool *o*. If the point of the tool is not rounded or curved, it will leave deep marks on the work, as shown in a somewhat exaggerated form in Fig. 32, the distance between the marks representing the movement of the tool for each revolution of the work. In some cases, when the work is small in diameter or when true square faces are not required, the edge of the tool is ground straight and set flat

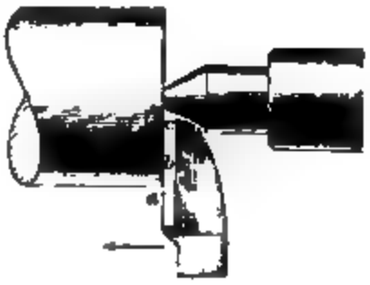

FIG. 33.

with the end of the work, as shown in Fig. 33. When the tool is thus set, it is fed in the direction of the arrow, that is, sidewise to the work and not drawn out from the center. The "squareness" of the end will then depend on the way in which the tool was set.

36. By setting the tool as in Fig. 31, so that only a small portion of the point cuts, and then drawing the tool out from the center, the squareness of the end is insured, because of the accuracy of the cross-feed. If, however, in making the cut, the tool and carriage are jarred or moved away from the work, or if the tool dulls, or springs in the tool post, the work will not be true. The work may be tested with sufficient accuracy for ordinary work by putting a scale or straightedge across the end, when, by holding it to the light, it will be easy to detect any slight error. If the lathe continues to make the work concave or convex after the spring of the carriage and tool have been cared for, the lathe centers will probably be found out of line. After the centers are lined up, the difficulty will probably disappear.

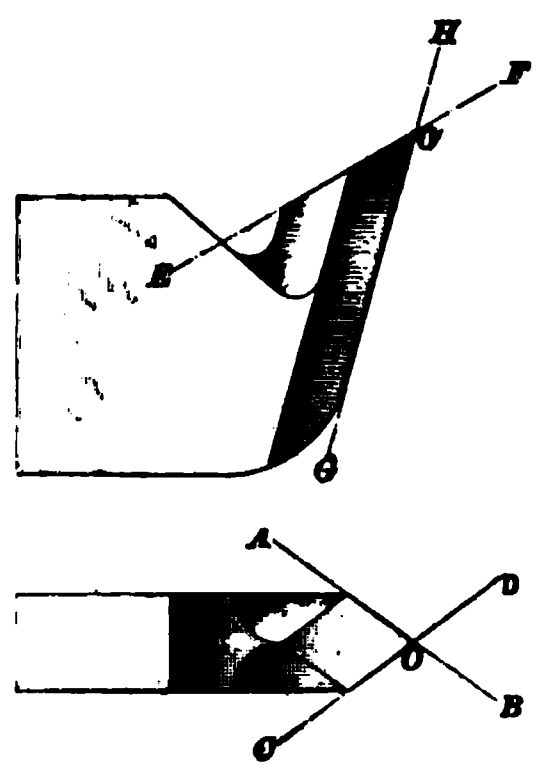

FIG. 34.

TURNING TO A DIAMETER.

THE TOOL.

37. Shape of Tool.—The tool selected for the outside cylindrical turning in this case is called a **diamond point** or **front tool.** Very much depends on its exact shape and the way it is held in the tool post and presented to the work. These tools will be discussed in full later. For the present, the typical form represented by the diamond point will be considered. Fig. 34 shows this tool as ordinarily formed. The cutting is done by the edge *A B* and the point *O* shown in plan.

38. Grinding.—The tool is sharpened by grinding the top face *E F* and the faces shown by the lines *A B* and *C D*. Care should be taken in grinding the front faces that the same amount be ground off the heel of the tool as at the point, so that the slope of the front of the tool, shown by the line *G H*, be kept the same. When the tool becomes dull, there is a tendency to hurry the grinding operation and make the cutting edges sharp by rounding the front faces, so that the tool soon appears as shown in Fig. 35. While this may make the cutting edge sharp, it entirely changes the cutting conditions of the tool.

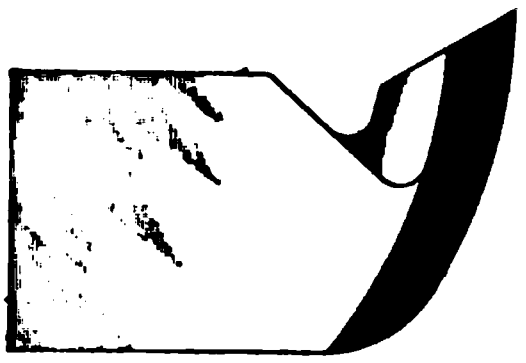

FIG. 35.

After grinding the three faces *E F*, *A B*, and *C D*, Fig. 34, they will form a sharp point at *O* and a sharp edge along the line *G H*. This edge should be rounded along its entire length, so that the point of the tool will be rounded as shown in plan in Fig. 34.

In grinding lathe tools when the tool is held in the hand, the point should be finished by holding it, when applied to the grindstone or emery wheel, as shown in Fig. 36. This allows the water to strike the cutting edge first, keeping it

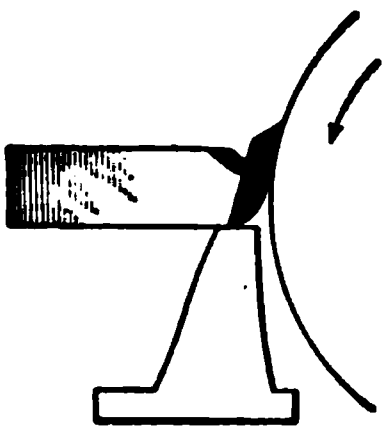

FIG. 36.

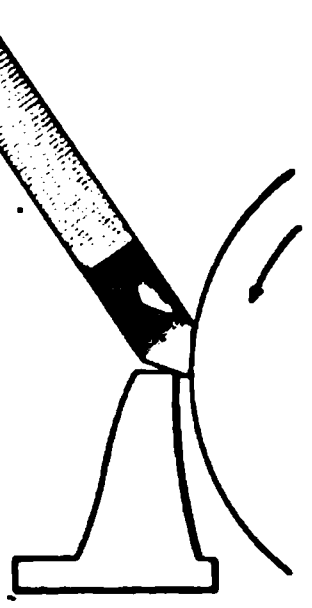

FIG. 37.

cool; it also sets in the correct direction the grain of the tool caused by the cutting particles of the emery wheel. The tool should never be held as shown in Fig. 37 when grinding by hand, as there is danger that it will catch between the wheel and the rest and cause much damage.

SETTING THE TOOL.

39. Position of Tool. — The tool should be clamped in the tool post as close to the cutting edge as possible, to

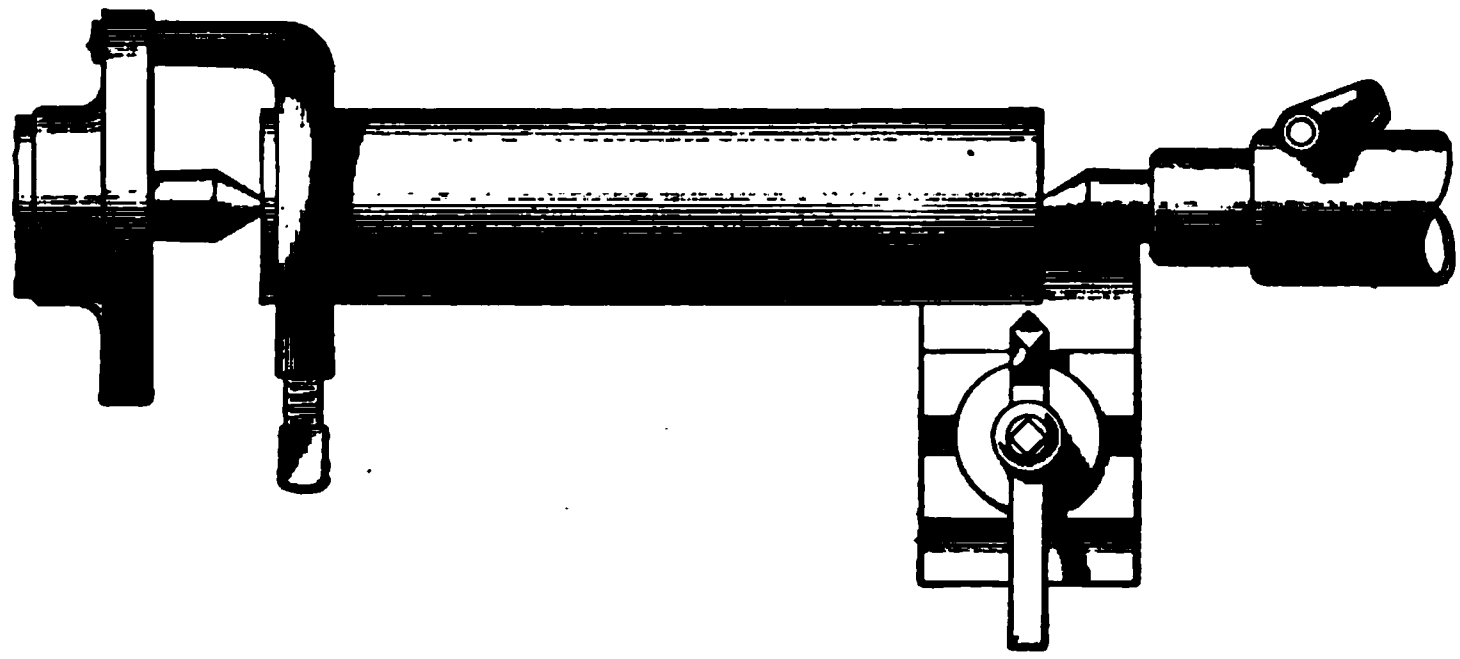

FIG. 38.

give it rigidity. The shank is generally set about square with the work, as shown in Fig. 38.

40. Height of Tool. — Very much depends on the height of the tool. The correct height is governed by the angle of front rake or the slope of front edge of the tool *G H*, Fig. 34. Fig. 39 shows a tool at the correct height for turning a piece to the diameter shown by the inner circle.

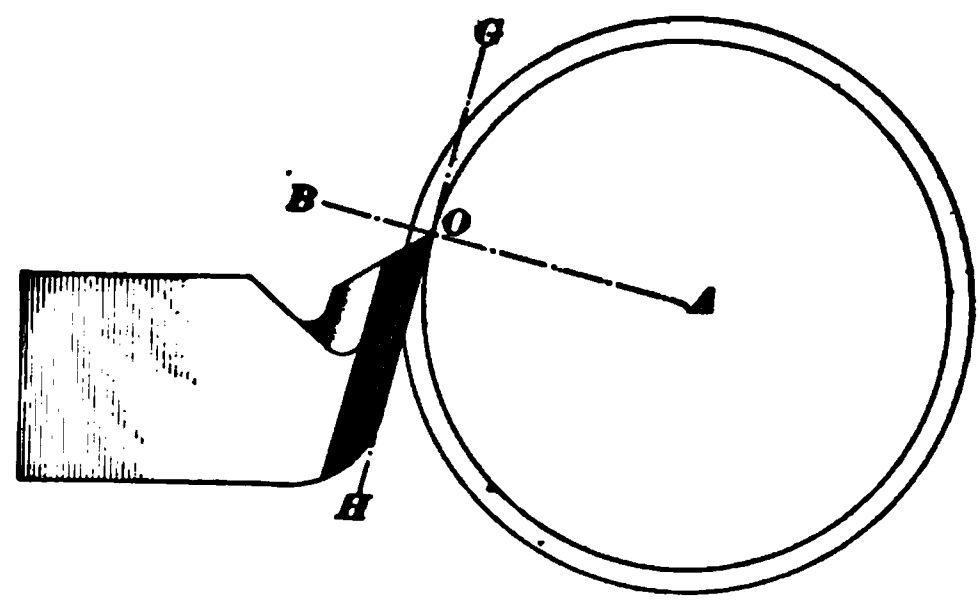

FIG. 39.

In this case, if a line *A B* be drawn from the center of the work *A*, through the point of the tool *O*, it will be found that the front of the tool *G H* is tangent at this point *O*.

If the tool should be raised, keeping the front of the tool *G H* at the same angle to the work, it would bring the

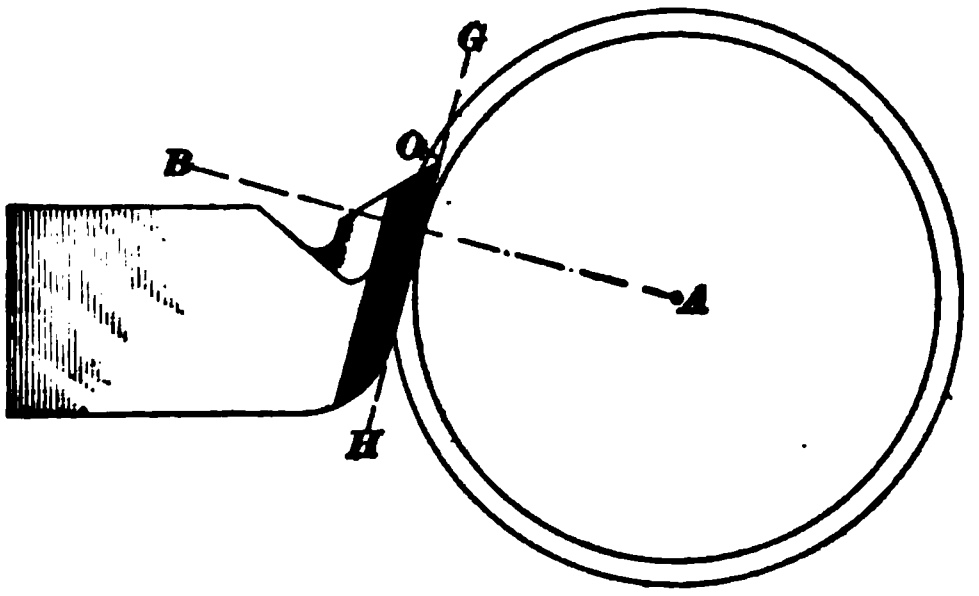

FIG. 40.

cutting point above the work, as shown in Fig. 40. It is obvious that in this position it would be impossible for the tool to cut.

Fig. 39 shows the exact position for a perfect tool, provided it would remain sharp. In practice, the tool dulls and the point rounds off slightly, so that it is customary to set the tool slightly below this theoretical point. This theoretical height varies with every diameter of work. Fig. 41

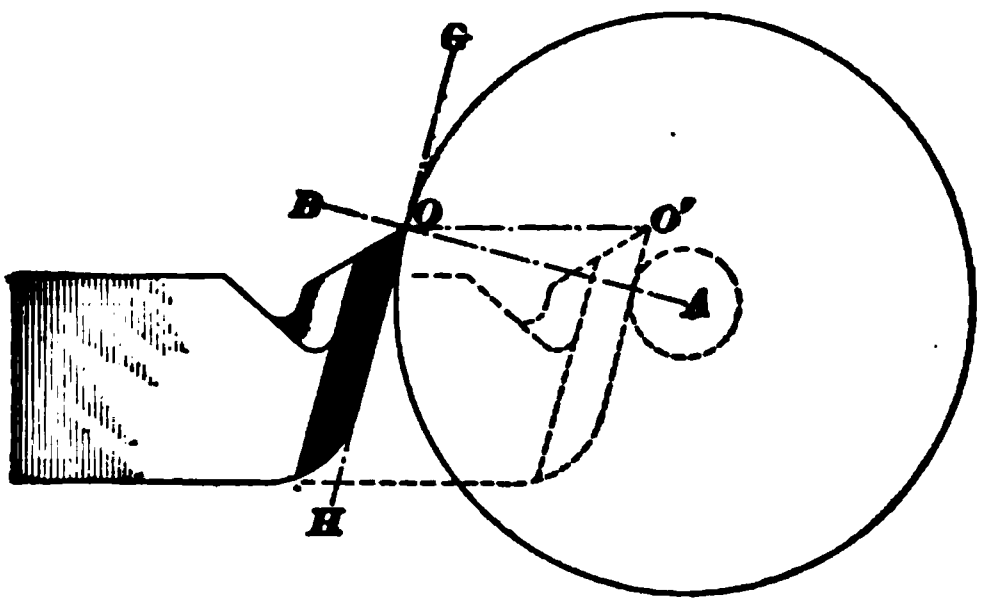

FIG. 41.

shows a tool correctly set for a piece of large diameter. The dotted lines show the same tool at the same height moved in to cut on a smaller piece shown by the dotted lines. It will readily be seen that the tool cannot cut work

of such small diameter when its point O' is so far above the work. It will also be seen that the point of the tool should be lowered as the diameter decreases, the point O following along the line AB until it finally reaches the axis of the work. In clamping the tool in the tool post, care should be taken that the point of the tool does not touch the work. When it does touch and the tool is clamped down, the edge is liable to be cracked off, as shown in Fig. 42.

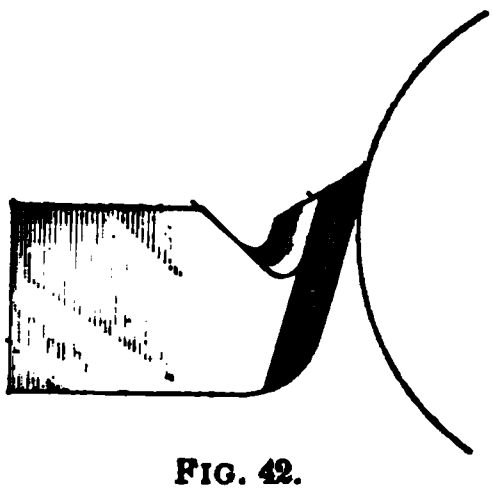

FIG. 42.

TAKING THE CUT.

41. Roughing Cuts.—Roughing cuts are taken to reduce the work very close to size in the shortest time, after which the work is finished to the exact diameter and at the same time made smooth.

When it is possible to remove the excessive amount of material at one cut, it should be done. Whether this can be done or not depends on the power of the machine and the strength of the tool, and on the strength of the piece to withstand a heavy cut without springing or breaking. Some pieces are so frail that a number of light cuts are required to remove an amount of material that under more favorable conditions could easily be taken off at one cut. Whatever the amount removed may be, there should be left from $\frac{1}{64}$ to $\frac{1}{32}$ inch in diameter over the finished size for the finishing cut. Only in special cases or on rough work is it allowable to rough and finish work with the same cut.

42. In making the first cut, the tool is started at the end of the work and fed by hand until it begins to cut. The feed is then thrown in and the tool moves along until a short piece is turned on the end. This part is calipered, and if correct, the lathe runs on until the tool has fed about half the length of the work. The work will then be as shown in Fig. 43, the part *a* being rough, and the part *b* turned. It

will be seen that the tool cannot continue over the entire piece because of the lathe dog on the end *a*. The work should therefore be removed from the lathe and the tool

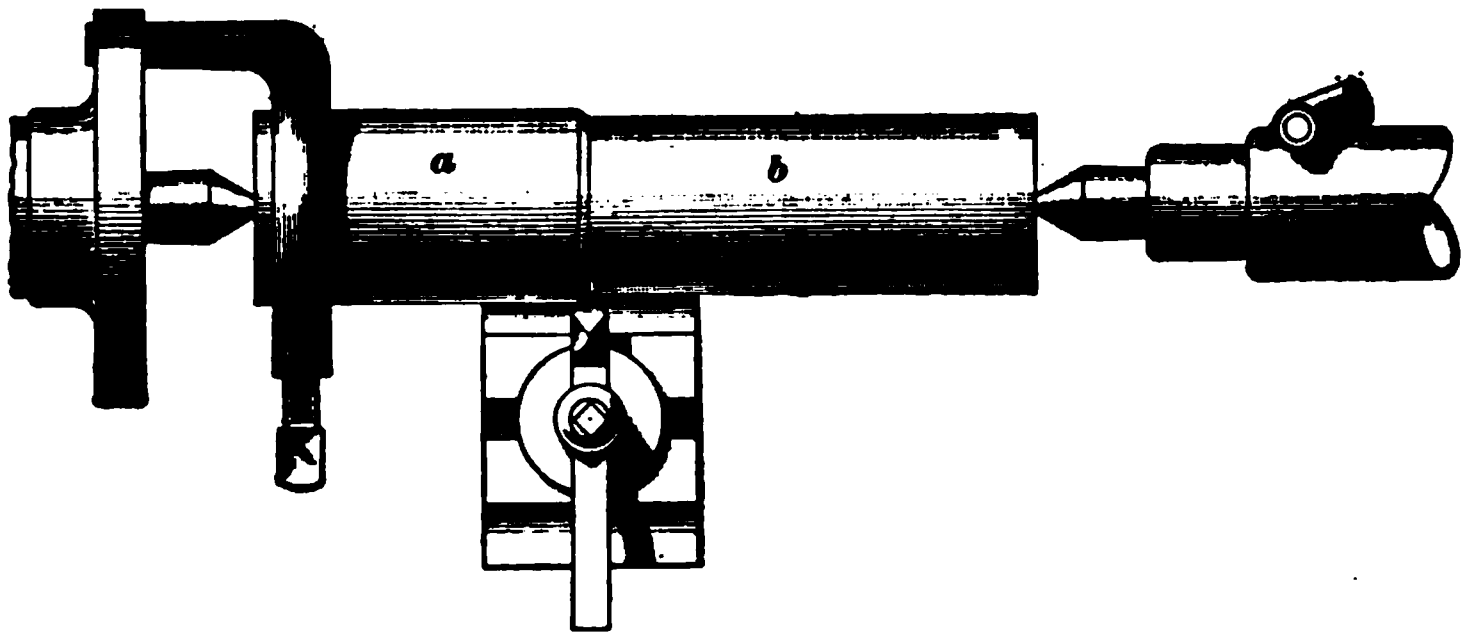

FIG. 43.

and carriage moved back to the starting point, care being taken not to move the cross-slide that moves the tool in or out from the work.

The dog is changed to the end *b* and the work reversed and again put in the lathe. This will bring the work as shown in Fig. 44. The end *a* is then turned the same as

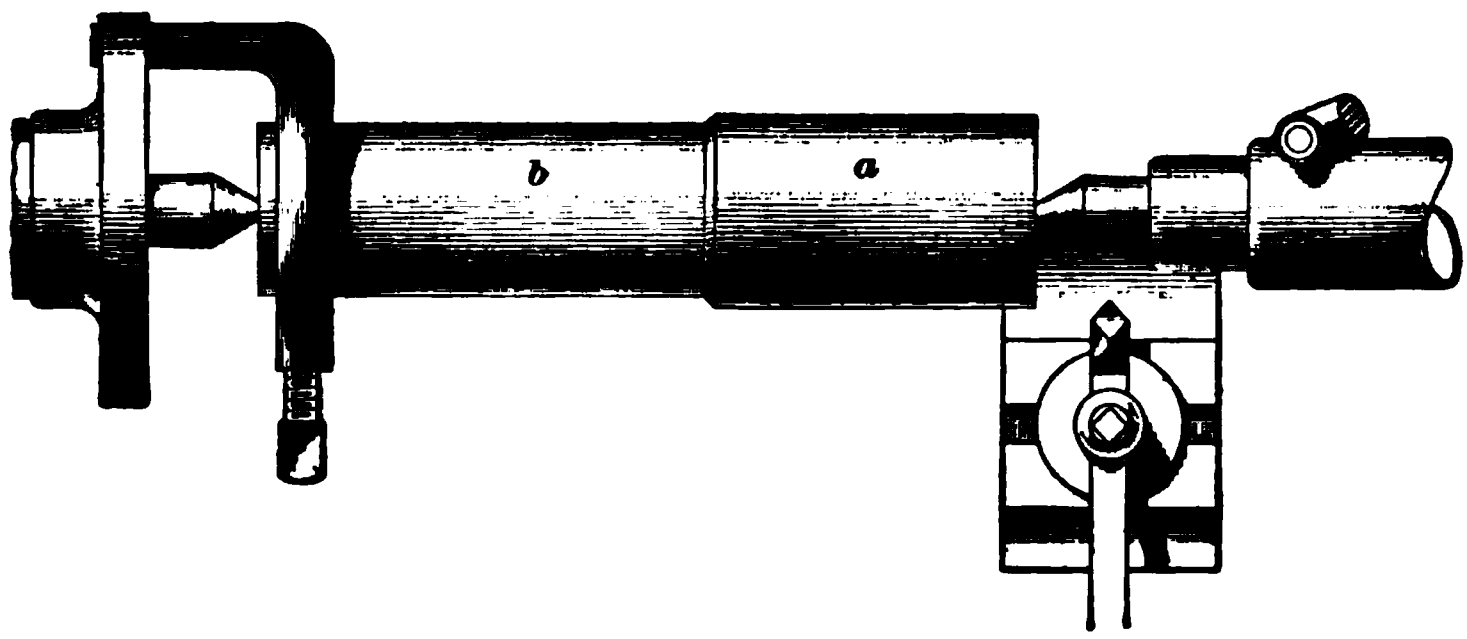

FIG. 44.

end *b*, and if the cross-feed has not been moved, the work will be the same diameter at each end, the two cuts meeting in the middle.

When it is necessary to take a number of cuts and accurate work is desired, it is better to reverse the work after each

cut, as just described, than to take a number of cuts on one end before reversing. The speed of the work depends on certain conditions that will be treated of later. For this particular piece, Fig. 9, which is 2 inches in diameter, it should make about 75 revolutions per minute, provided the casting is soft. The feed should be comparatively coarse, making a thick shaving.

43. Finishing Cuts. — In taking the finishing cut, considerable skill must be exercised, since if the piece is once made too small, there is no remedy, and if cut rough and untrue, it requires much extra labor to complete it.

The tool should always be resharpened for the finishing cut. Its shape remains much the same as for roughing, except that the top face may be given a little more slant or top rake.

The shape for tools for roughing and finishing cuts will be described more fully when considering the theory of cutting tools. The shapes of tools and also the feed vary considerably, so that what may be considered good practice for this piece would not be the best for heavier work.

FINISHING TO AN EXACT SIZE.

44. Use of Calipers for Measuring.—The diameter of the work is measured by the use of special gauges or by calipers. When calipers are used, they are adjusted to correct size by trying them over a standard cylindrical gauge of the desired size, or they may be set to size by the use of a scale. When setting calipers by the use of a scale, they should be held as shown in Fig. 45. It will be noticed that the point of one leg of the calipers comes against the end of the scale. By means of the thumb nut, the calipers are adjusted so that the other point of the calipers comes even with the desired line on the scale.

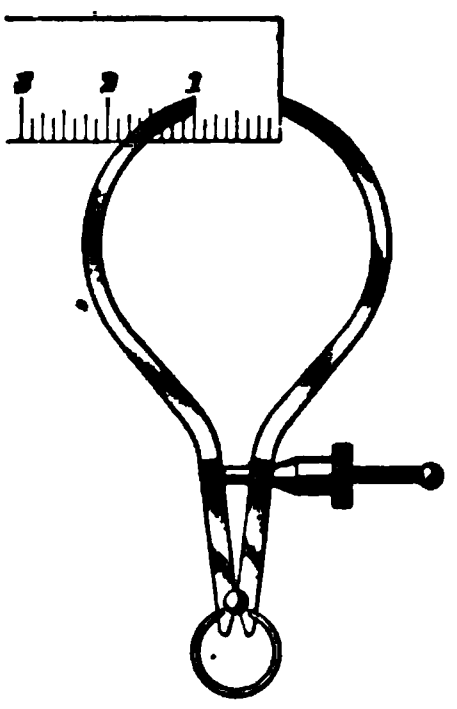

FIG. 45.

Care must be taken to hold the calipers true and to make the adjustment such that by looking squarely by the point of the caliper, it will appear to split the mark on the scale. The thickness of a line on a steel scale is equal to .002 or .003 inch, and in many instances this amount would be sufficient to cause considerable trouble.

45. Adjusting the Tool.—The lathe tool is set to turn the correct diameter by a series of careful trials. A light cut is first taken on the end, running along far enough to give sufficient length of turned part to caliper. The lathe is stopped and this part carefully calipered. If found to be too large, the lathe is again started, the feed thrown out, and the carriage and tool moved back to the starting point. The tool is moved forwards an amount determined by the judgment of the operator and another cut taken. The work is again calipered, and if found to be correct, the lathe is started and the cut proceeds; if the work is still too large, the previous operation is repeated until the correct diameter is obtained. It should be noticed that if, after measuring the work, it is found necessary to take another cut, the cross-feed screw must not be used except to advance the tool. If the tool is moved away from the cut, the operator has no means of estimating how much to turn the cross-feed screw to move the tool in a little deeper than it was for the last cut.

46. After the roughing cut, the work should be calipered along its entire length to see if it is all of the same diameter. If one end is larger than the other, it may result from either of two causes. The lathe centers may be out of line, or the tool point may have worn away enough to cause a noticeable difference of diameter. If the centers are out of line, the dead center must be moved until the two sides of the work are parallel. Care must be taken, however, to locate the cause correctly, in order that the center may not be moved when the tool is at fault. The adjustment of the dead center will be considered later.

CALIPERING.

47. Great skill and delicacy of touch may be acquired by careful calipering, and differences in diameter of .001 inch may be detected with ordinary spring calipers. There are two chances for error in calipering: *first*, by incorrectly setting the calipers, and, *second*, by not properly handling them.

Assuming that the calipers are correctly adjusted, they are held lightly between the thumb and fingers and passed gently over the work a number of times. It is obvious that the diameter of a cylinder must be measured at right angles to its axis, and if measured at any other angle, as along the line *CD*, Fig. 46, it would be incorrect. The calipers are therefore turned slightly from side to side until the position is found where the calipers pass over the easiest. This position, which appears to be the smallest diameter, is the correct one. When the work is of the correct size and the correct position is found, the calipers will just pass over with a very gentle pressure. If the pressure is sufficient to hold the weight of the calipers or if force is required to push them over the work, it is too large. Calipers may very easily be sprung, and it is an easy matter to force them over work $\frac{1}{16}$ or $\frac{1}{8}$ inch too large. When the calipers have been set from a gauge, the work should be turned so that they fit the work with the same pressure and feeling that they fit the gauge.

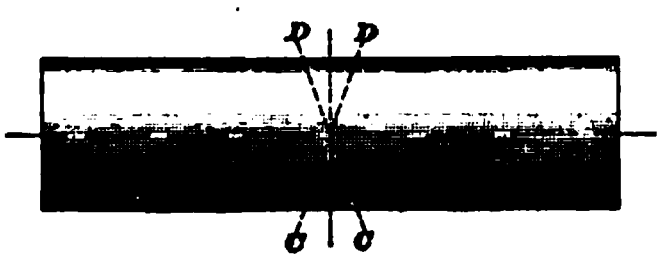

FIG. 46.

TAPER TURNING.

48. Expressing the Taper.—Taper is expressed by the difference in diameter per unit of length, as $\frac{1}{8}$ inch to 1 inch, or 2 inches to 1 foot, meaning, in the first case, that if measurements be taken on a taper 1 inch apart, the difference in diameters will be $\frac{1}{8}$ inch, or, in the second case, if

measured 1 foot apart, the difference in diameters will be 2 inches. It matters not how large a piece may be, provided this ratio of diameter is maintained. Fig. 47 shows a number of pieces of different diameters but all of the same taper. Their lengths are the same, and the difference of diameters at the two ends is constant.

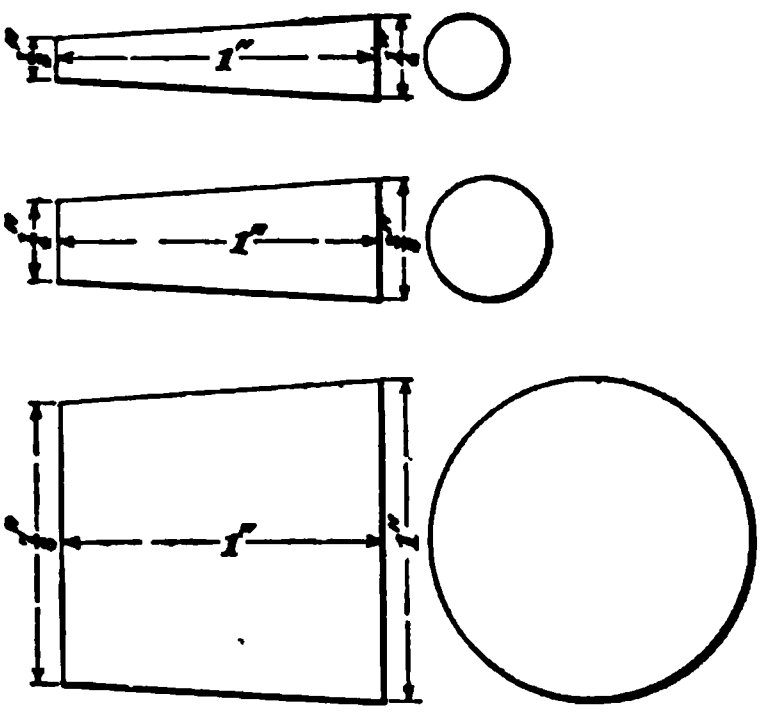

FIG. 47.

Fig. 48 shows pieces of different lengths but still of the same taper. The first piece, 1 inch long, has a difference of $\frac{1}{8}$ inch in diameter at the ends. The next piece, 2 inches long, has $\frac{2}{8}$ inch difference of diameter at the ends; the third piece, 4 inches long, has $\frac{4}{8}$ inch difference in diameter. If the piece were 12 inches long, the difference of diameter at the ends would be $\frac{12}{8}$ or $1\frac{1}{2}$ inches taper to the foot. It may thus be seen how taper expressed in one denomination may be reduced to another denomination. Thus, *to reduce taper per foot to taper per inch divide by 12. To reduce taper per inch to taper per foot multiply by 12.*

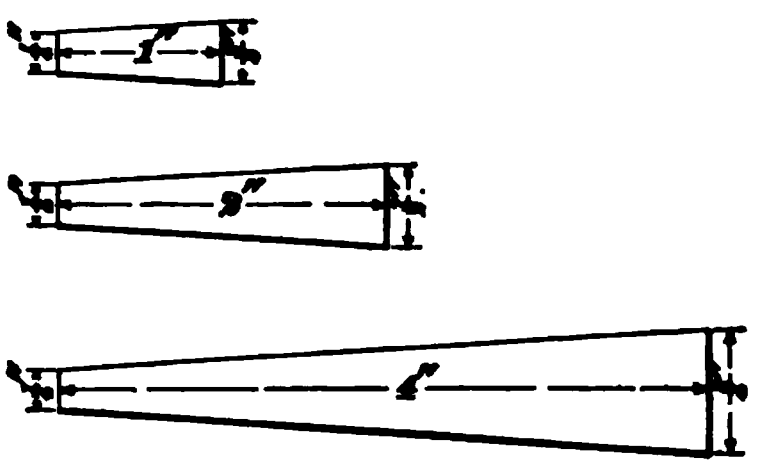

FIG. 48.

49. Standard Tapers.—Tapers are often spoken of by numbers or by the names of particular makers. For example, the Brown & Sharpe taper of a given number, or the Morse taper of a given number. The Brown & Sharpe taper is supposed to be a taper of $\frac{1}{2}$ inch to 1 foot and the number of the taper indicates a particular diameter. The Morse taper was intended to be $\frac{5}{8}$ inch to 1 foot and the

numbers indicate different sizes. Unfortunately, the first standards were inaccurate and, consequently, the different numbers of Morse tapers are not the same and no one of them is exactly $\frac{5}{8}$ inch to 1 foot, as originally intended.

METHODS OF TURNING TAPERS.

50. Classification of Methods. — There are four methods for turning tapers in common use, which are as follows: *first*, the dead center may be set out of line with the live center; *second*, a lathe provided with a special taper attachment may be employed; *third*, a special turning lathe in which the headstock and tailstock may be set at an angle to the line of tool feed-motion may be employed; *fourth*, the taper may be turned with the aid of a compound rest.

The first method is applicable only for outside turning, while the other three may be used for turning and boring.

SETTING OVER THE TAILSTOCK.

51. Construction of the Tailstock.—The tailstock of a lathe is so constructed that the spindle and dead center may be moved to bring it either exactly in line with the live center, for parallel turning, or out of line with the live center for taper turning.

Fig. 49 shows an end view of a tailstock. The part *a* is fitted to the lathe bed. The part *b* is fitted accurately to part *a* and may be moved toward either the front or the back of the lathe. The part *b* is moved by turning the adjusting screw *c* at the front. When it is desired to turn a taper, the tailstock is unclamped by loosening the nut *d*, which clamps it to the bed, and the dead center is moved out of line an amount that has been previously calculated or found by trial to be correct.

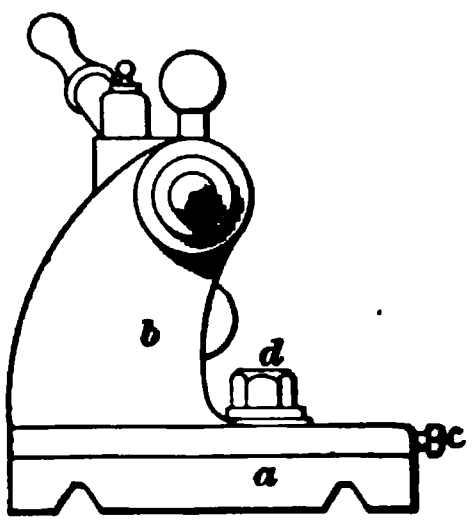

FIG. 49.

52. Estimating the Amount of Set-Over. — The amount that a center should be moved to turn a given taper

FIG. 50.

can be easily calculated. Suppose it is desired to turn a taper $\frac{1}{2}$ inch to the foot on the piece shown in Fig. 50. This means that in 1 foot length the difference of diameter is $\frac{1}{2}$ inch, and since the piece is 1 foot long, it will be necessary to move the dead center out of line and toward the front of the machine one-half of this half inch, or $\frac{1}{4}$ inch. It must be understood in turning that if we take a cut $\frac{1}{4}$ inch deep, we reduce the diameter $\frac{1}{2}$ inch. Moving the dead center toward the tool $\frac{1}{4}$ inch is equivalent to taking a shaving or cut $\frac{1}{4}$ inch deep. The amount that a center is set out of line may easily be measured by moving the two centers close to each other and measuring from point to point with a scale, as in Fig. 51, or by means of a scale on the tailstock, as shown in Fig. 52.

FIG. 51.

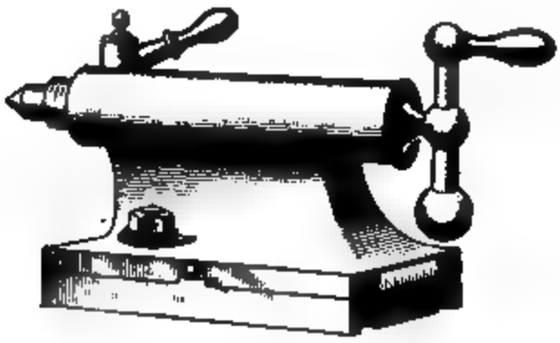

FIG. 52.

53. Suppose the piece to be as shown in Fig. 53. Here the taper is $\frac{3}{4}$ inch to 1 foot and the piece is 10 inches long. If the piece were 12 inches long, it could at once be estimated that the center should be set out of line $\frac{3}{8}$ inch, but since the piece is less than 12 inches long, $\frac{3}{8}$ inch would not be correct, as it would turn the taper too blunt. We must here reduce the taper per foot

to taper per inch by dividing by 12. Dividing $\frac{3}{4}$ by 12 equals $\frac{3}{4} \times \frac{1}{12} = \frac{3}{48} = \frac{1}{16}$ inch; $\frac{1}{16}$ inch to the inch is therefore equal to $\frac{3}{4}$ inch to the foot. Multiplying the total length of the piece between centers by 10, $\frac{1}{16} \times 10 = \frac{10}{16} = \frac{5}{8}$ inch, the taper in a piece 10 inches long. Since the center is set over half the amount of the taper, divide $\frac{5}{8}$ by 2, which gives $\frac{5}{16}$ inch, the amount that the center should be moved out of line.

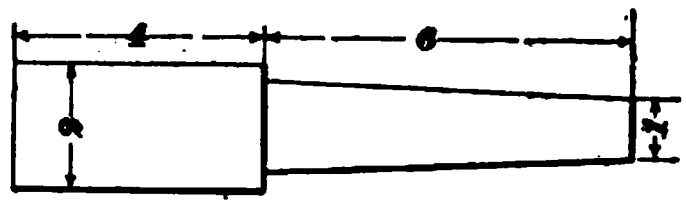

FIG. 53.

54. Setting by Notches.—When the taper per foot is not given but when we have the diameters, with the distance between them, another method may be used. Suppose a piece as shown in Fig. 54 is to be finished. Notches are first cut in the stock, as shown at *a* and *b*, Fig. 55. The dotted lines indicate the shape of the finished piece. One notch is cut $\frac{7}{8}$ inch from the end, until the diameter at the bottom is $1\frac{1}{8}$ inches, and the second notch is cut $3\frac{1}{4}$ inches from the first until it measures $1\frac{7}{16}$ inches at the bottom. These notches define the taper, and from these diameters, measurements are taken for setting the lathe, as will be shown later.

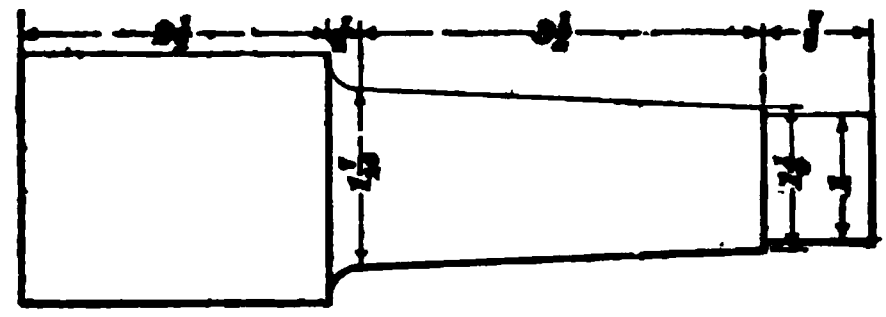

FIG. 54.

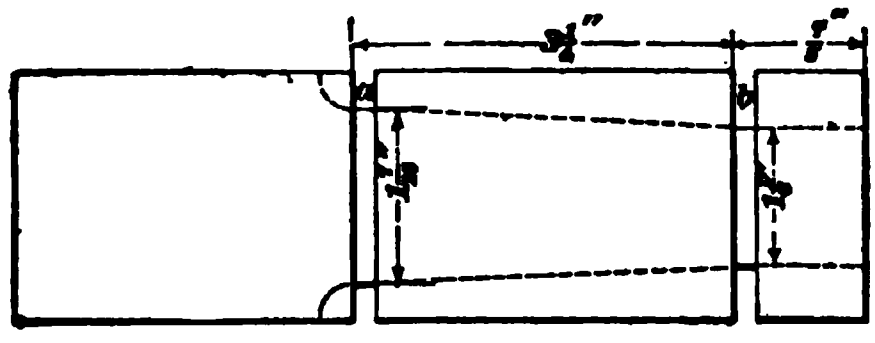

FIG. 55.

When the work is prepared, it is put between the center and a tool held in the tool post, the same as for turning. The dead center is moved an amount estimated by judgment. The tool is then moved opposite one notch of the work, as at *a*, Fig. 56, and the distance from the point of the tool to the bottom of the notch is measured. The tool and carriage are then moved opposite the second notch *b*,

and the same measurement taken. If the measurements are alike, the work is correctly set; if not, the dead center must be adjusted until they are the same. After each adjustment of the tailstock, the work must be measured from

FIG. 56.

each notch. It is not right to measure with the tool in position *a*, and then adjust the tailstock until the measurement at *b* is the same, for it will be seen that in changing the measurement at *b* the measurement at *a* will also change, although not so rapidly.

Various methods are employed for taking the measurements from the work to the point of the tool. An ordinary scale or a pair of inside calipers may be used. When calipers are used, it is better to use the butt end of the tool, or some flat surface, as it is easier to measure between surfaces than between points.

FIG. 57.

55. Caliper Tool. — A still better way is to have a special caliper tool, as shown in Fig. 57. It consists of a shank *b* like an ordinary lathe tool, to the end of which is

pivoted a pointer *p*, which can be moved like the leg of a caliper. The tool is clamped to the tool post and adjusted so that the rivet *e* on which the pointer swings is at the same height as the axis of the work. When it is desired to test the work, the pointer is brought opposite one of the notches and the tool is adjusted by means of the cross-feed screw until the end of the pointer just touches the work, as shown. The nurled knob *a* is connected with the pointer and is used for moving it in calipering. After the tool is adjusted for one position, the pointer is dropped so that it can be moved to the other position, where it will at once indicate whether the work is correctly set or not.

56. Setting by Turning Parallel to Two Diameters.—Sometimes tapered work is set by turning to two diameters, as shown in Fig. 58, the work being turned to the smallest diameter of the taper up to its beginning, and then from this point to the head of the taper the work is turned to the largest diameter of the taper, as shown. After this, the tool may be set to the points *a* and *b*, as in the case of setting by notches. This method has the advantage that a large portion of the stock is removed while the work is between centers that are in line, and fits the centers of the work perfectly.

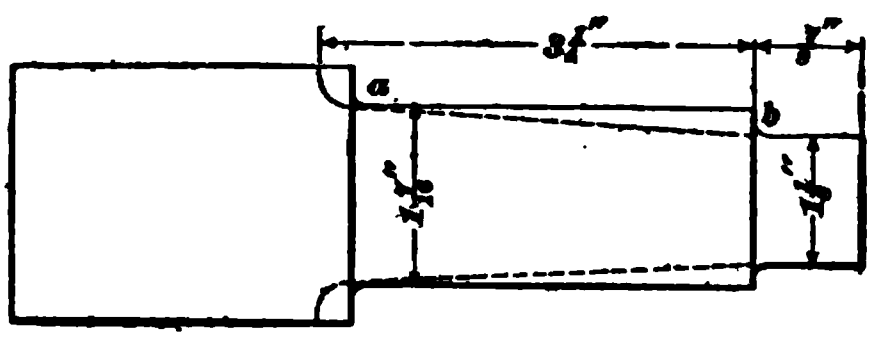

FIG. 58.

57. Setting With a Model Piece.—When a model taper has been furnished, the lathe may be set directly from it. The model is put between the lathe centers, and the dead center is adjusted so that the measurements from the point of a tool in the tool post to the taper model remains constant as the carriage and tool are moved along its length. When close measurements are desired, the tool, or, better, some article with a rounded end, is brought close to the model, so that it loosely pinches a piece of tissue

paper. The tool and the paper are moved along the length of the taper and tested at various places by pulling the paper. If the paper slips between the tool and the taper model with about the same pull at all places, it is correct. While this method of turning tapers by setting over the tail-stock is a very common one, it is by no means the best, since there are some very objectionable features.

OBJECTION TO SETTING OVER LATHE CENTERS.

58. Wear of Centers.—Fig. 59 shows a section through work when the centers are set out considerably. It will be seen that the dead center touches the work in only two

FIG. 59.

points. Since the work rotates about the dead center, there is a tendency to wear away the center hole and the lathe center. Much wear would result in a shape as shown in Fig. 60. The front side of the point of the center is worn away and a groove formed at the back, while the center hole is worn into a bell shape. The live center revolves with the work, so that the wearing action between it and the center is somewhat different. On the dead center the work has a rotating motion, while on the live center it has a reciprocating motion. The result is that the live center is worn evenly all around, and the center hole is worn into about the same shape as the dead-center hole.

FIG. 60.

This wear on the center holes is very undesirable. It makes it difficult to turn a true taper, and if a part of the work has been turned true and parallel, it will be found to run untrue on the worn center holes. The result is that after a taper has been turned, the tapered part and the parallel part do not run true with each other. Besides this, if the lathe centers become much worn, it will be necessary to grind them before parallel or true work can again be turned.

59. Different Tapers for Different Lengths of Work.—When it is desired to turn the same taper on a number of pieces of different lengths, it will be found that the center must be adjusted or reset for each length of work. When the lathe is adjusted to turn a given taper or work of a particular length, it will be found that if the work is a little longer or shorter, it will change the taper. Suppose that in Fig. 61, *a b* represents the line of lathe centers for

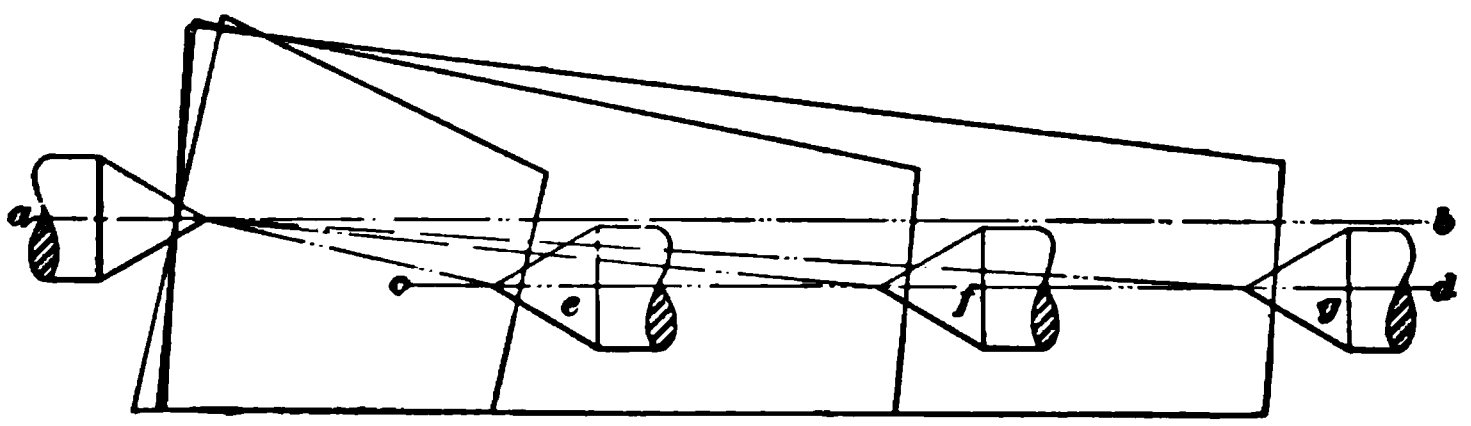

FIG. 61.

turning parallel work. Assume that the dead center is set out of line $\frac{1}{4}$ inch, as shown by the line *c d*.

Any piece that may be turned with the dead center thus set will have a difference of diameter at its ends of $\frac{1}{2}$ inch. If the piece be 1 inch long, so that the dead center is in position *e*, the taper will be $\frac{1}{2}$ inch to the inch. If the piece be 2 inches long, so that the dead center is in position *f*, the taper will be $\frac{1}{2}$ inch to 2 inches, or $\frac{1}{4}$ inch to the inch. If the piece is 3 inches long, so that the dead center is in position *g*, the taper will be $\frac{1}{2}$ inch to 3 inches, or 2 inches to the foot. These three tapers may be compared by reference to the outlines. It is evident that any slight difference in the distances between centers in turning two pieces of

work will make a difference of taper that can readily be detected when fitting work. If, in two pieces of the same length, one is centered and reamed with much deeper center holes than the other, it will allow the lathe centers to come closer together. This will cause a slight error. In estimating the amount that a dead center should be set over, as previously described, this error is often neglected, as the work is usually tested before the finishing cut is taken, and any slight error is corrected.

60. Amount of Taper Possible.—The amount of taper that can be turned between centers by setting over the center is limited by the total length of work and the amount of adjustment possible in the tailstock. Suppose the greatest amount of "set-over" in the tailstock is 2 inches. This will make a difference of diameter at the ends of the work of 4 inches. If we should wish to turn a taper of 1 inch to the foot, the greatest length of shaft on which we could turn it is 4 feet, and if the shaft or work should be longer than this, it would be necessary to use some other method of turning the taper.

TAPER ATTACHMENT.

61. Principle of Taper Attachment.—Very many of the objections that arise in taper turning due to the setting of the dead center are eliminated by the use of the **taper attachment.** The principle is simple. It consists primarily of a guide bar supported by brackets on the back of the lathe. This bar so controls the movement of the cutting tool that as it is fed along the bed it is made to advance or recede from the work.

Fig. 62 shows a taper attachment applied to a lathe as seen from the back. This particular carriage is fitted with a taper attachment and a compound rest *k*, a device also used for turning tapers. The peculiarity of this carriage for the taper attachment is that it requires an extra slide.

62. Description.—Fig. 63 shows a side elevation of a carriage with this form of taper attachment. The saddle *a*

FIG. 62.

is fitted to the V's of the bed and to the apron, as on the

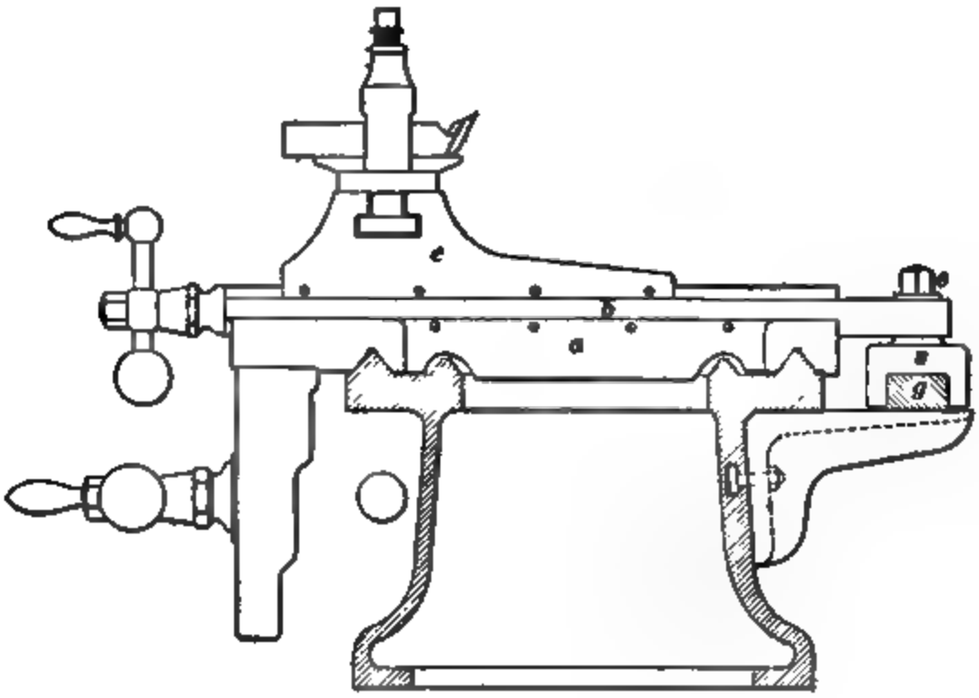

FIG. 63.

ordinary carriage. To this is fitted the extra cross-slide *b*, which projects at the back and is connected with a bolt *e* and

shoe *s* to the guide bar *g*. The cross-feed screw is attached at the front end of the slide *b*, and operates the tool block *c*, which is fitted so as to slide upon part *b*. When the cross-feed screw is turned, the tool moves as in the ordinary carriage. When part *b* moves, it carries the tool with it. The movement of part *b* and, consequently, the movement of the tool, is controlled by the angularity of bar *g*. If this bar is set parallel to the V's of the lathe bed, there will be no motion of part *b* across the lathe and the tool will turn the work parallel. Suppose this guide bar to be 2 feet long and pivoted in the center. If the bar be turned at such an angle that the ends are out of line $\frac{1}{4}$ inch, and the carriage be moved along from the center of the bar to the end, then the part *b* and the tool will be moved across the lathe bed $\frac{1}{8}$ inch. This will be equivalent to setting over the center $\frac{1}{8}$ inch, which on a piece 1 foot long would turn a taper of $\frac{1}{4}$ inch to the foot. If the carriage moved the whole length of the bar, or 2 feet, the tool would move across the lathe bed $\frac{1}{4}$ inch, which would give a taper of $\frac{1}{2}$ inch in 2 feet, which is the same as before. It will be seen from this that when the attachment is once set, it will turn the same taper on pieces of any length.

63. Adjusting to Turn a Given Taper.—In adjusting this style of taper attachment, the scale shown at the end of the bar *g*, Fig. 62, is used. A line at the center marked *o* indicates the mid-position, when the bar is parallel with the lathe bed V's. The scale indicates taper in eighths of an inch to the foot, so if a taper of $\frac{1}{2}$ inch to the foot is desired, the clamping bolts (not shown) that pass up through the slots in the end brackets are loosened and the adjusting screw *d* is turned until the pointer on the bar has moved over four marks. The bar is then clamped in place and all is ready to proceed with the cut. When the lathe is used for ordinary parallel work, the taper attachment is usually disconnected by removing the screw *e* from the block *s*, and the part *b* is clamped in its slide by tightening the setscrews *f* on the side.

64. Advantages.—The advantages of the taper attachment are apparent. By keeping the lathe centers in line while turning, the work centers do not wear untrue, the

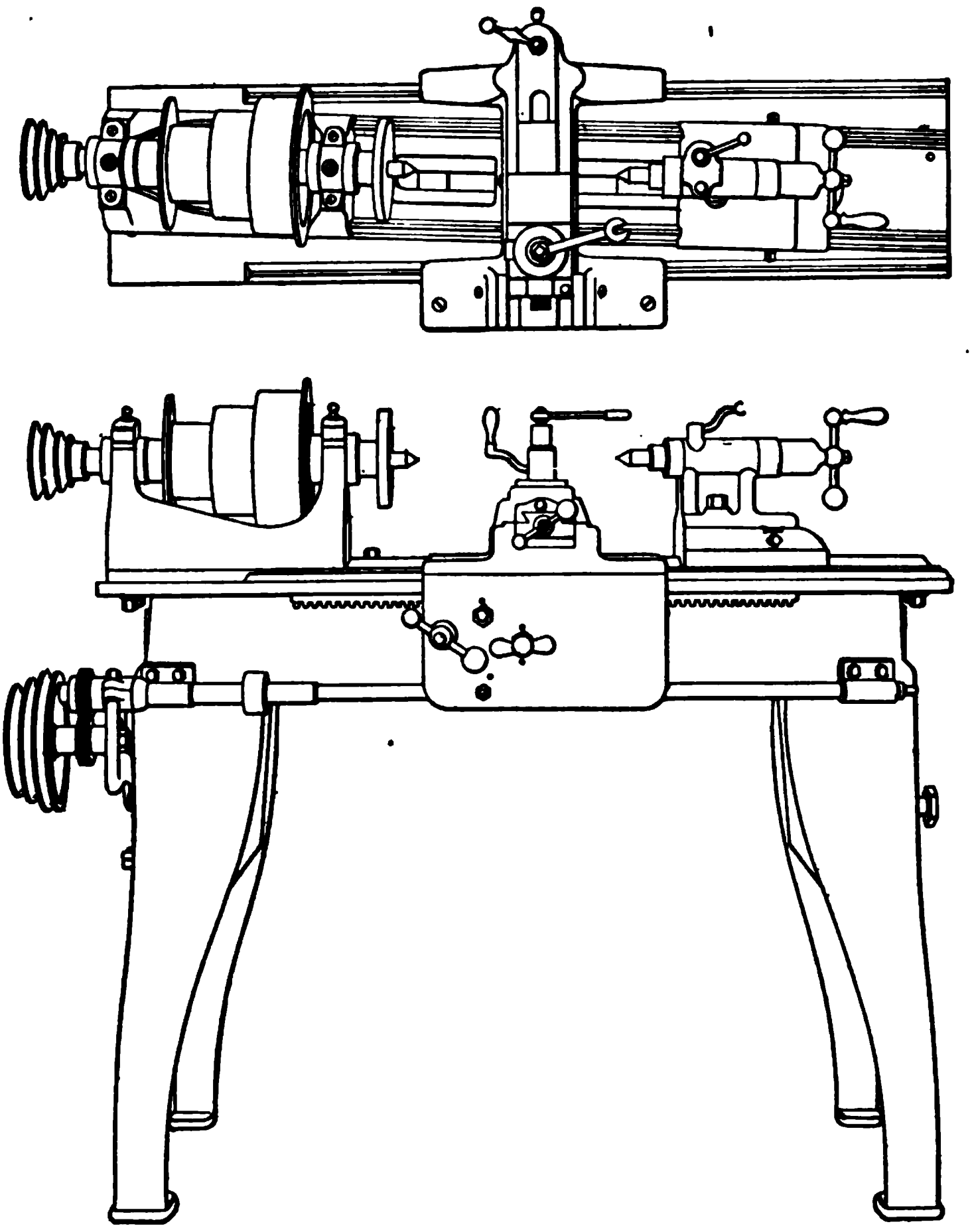

FIG. 64.

lathe centers are not subject to undue wear, and are constantly in line when a change is made from taper to straight work. When these attachments become much worn, there may be some lost motion in the parts. This will cause the

lathe to turn parallel for a short distance on the end, until the lost motion is taken up. This trouble can easily be overcome by starting the cut far enough beyond the end of the work so that by the time the carriage and tool have fed up to the work, all the lost motion has been taken up. In practice this movement of the tool and carriage is made by hand to save time.

SPECIAL TAPER-TURNING LATHE.

65. A more perfect arrangement for taper turning is found in lathes specially designed for this purpose. Such a machine is represented in plan and elevation in Fig. 64. In this machine, the headstock and tailstock are fitted to the V's of a plate or secondary bed. This plate is fitted to the main bed by being pivoted in the center in such a manner that it may be set at an angle with the V's of the main bed on which the carriage runs. This secondary bed is set by means of a scale at the end, in much the same manner as the guide bar of the taper attachment.

While it may at first appear that the taper is produced by setting over both headstock and tailstock, it is quite different from the method first described. In this style of machine, the axes of the headstock and tailstock spindles are always in line, so that all the desirable features found in the taper attachment are found here, while the trouble due to lost motion in the parts is avoided.

TURNING TAPER WITH A COMPOUND REST.

66. Use of Compound Rest.—When the taper is very abrupt, such as 1 inch to the inch, it can best be turned by means of the **compound rest.** Such a rest is very clearly shown in Fig 62. It consists of an extra slide for carrying the tool block, which is mounted in the place of the tool block on the ordinary saddle. This extra slide rests on a circular base and can be rotated and set so that the motion

of the tool block may be in a line at any angle with the regular cross-feed.

In Fig. 62, the usual cross-slide is operated by means of the handle *h*, while the compound slide is operated by the handle *j*.

67. Setting the Compound Rest.—The base of the compound rest is usually graduated with degrees, so that it may easily be set at any desired angle. When the angle in degrees of a taper is not known, it may be found by making a drawing of the work.

68. Example of Turning With Compound Rest.—Suppose it is desired to turn the piece as shown in Fig. 65. If the drawing has been accurately made, the angle may be measured with a bevel protractor; if only a sketch with dimensions is given, the angle may be laid off as follows: Draw two lines *a b* and *c d*, Fig. 66, at right angles to each other, intersecting at *o*. On *a b* lay off from *o* a distance 8 inches, equal to the distance between the given diameters. On *c d* lay off 7 inches, equal to half the difference of diameters, or equal to the difference of radii. Draw a line through these two points. If a protractor is at hand, the angles may be measured; if not, a bevel may be set equal to angle *y*. With the bevel, the compound rest may be set at the proper angle by using it as shown in Fig. 67. The beam of the bevel is held against the face plate while the compound

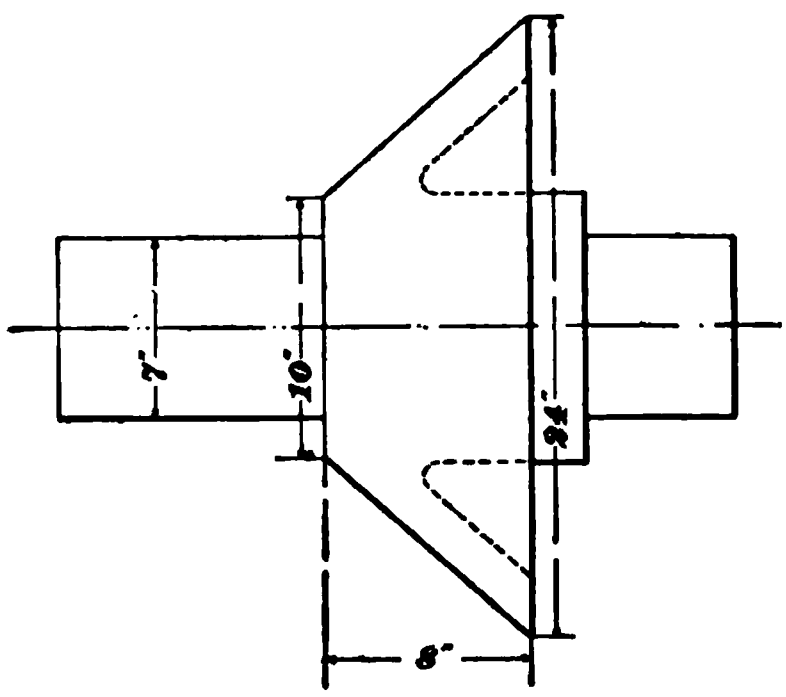

FIG. 65.

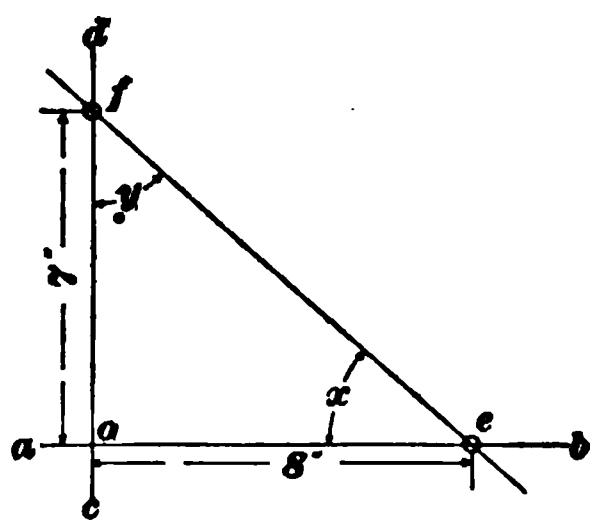

FIG. 66.

rest is swung to the angle indicated by the blade of the bevel. This method of setting the compound rest is also used when boring tapered holes.

FIG. 67.

TURNING TAPER BY USE OF TWO FEED-MOTIONS.

69. Another method of turning tapers is to use the two feeds at once. The longitudinal feed is thrown in and the tool may be fed by hand. Sometimes the two feeds may be worked automatically, but the method is not generally used, as it is difficult to proportion the rates of feeds to turn a correct taper.

POSITION OF TOOL.

70. General Directions.—The operation of turning a taper after the machine has been set is similar to that of turning a plain cylinder. The difference will be found in the shape of the tool and in the manner of setting it. This latter exception is of sufficient importance to warrant the statement of the following rule:

71. Setting the Tool.—*In setting a tool for turning a taper, the point of the tool should be at the same height as the axis of the work.*

Since the position of the tool is fixed at a given height in taper turning, the tool should be forged with little front rake or clearance, keenness being given by increasing its top rake. If the tool is set above the center, it will make the large end of the work too small. It will also make the sides

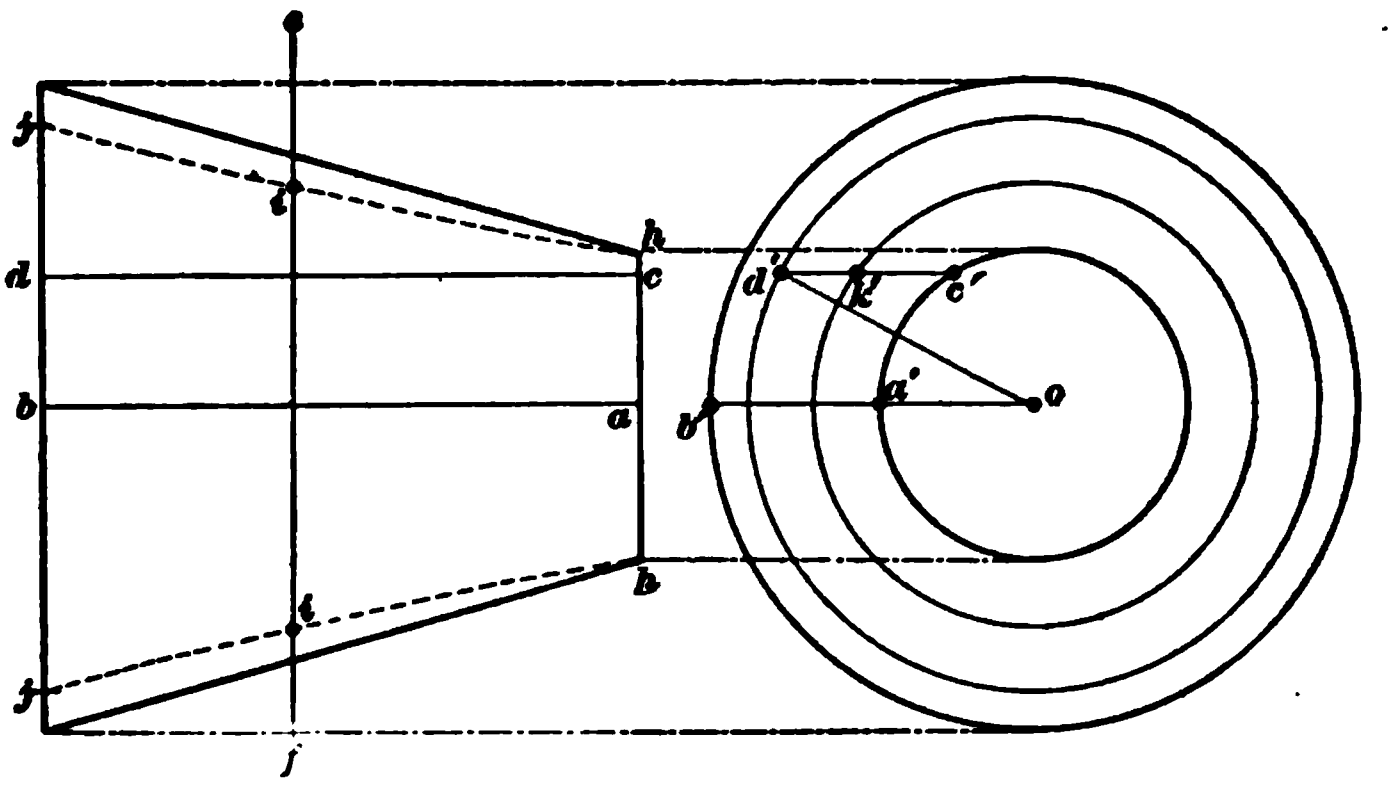

FIG. 68.

of the taper curved, as shown by the dotted lines *h i j* in Fig. 68. Suppose that we have turned a taper, as shown by the full lines, with the tool correctly set at the center. The line *a b* represents the path of the point of the tool, and is equal to the length of the piece. The line *a' b'* also shows the path of the point of the tool and represents exactly the amount that the tool recedes from the axis of the work in traveling along its length. With the machine once set, these conditions of tool travel will be repeated whether the tool is set high or low.

72. Suppose that the tool is set much above the center, as at *c*, and adjusted to cut the same diameter at the small end as before. The path of the tool will then be along the line *c d*, equal to *a b*. When the tool has reached the point *d*, it will also have moved along the line *c' d'* to the point *d'*, a distance equal to *a' b'*. A circle drawn through *d'* represents the diameter that the tool is turning when it leaves the work at *d*. This will be seen to be somewhat smaller

than the correct diameter obtained when the tool is properly set. In the same manner we may find the exact diameter that the tool may be turning at any point along the taper.

Suppose we wish to find the diameter that the tool will turn in the middle of the piece when the tool is set above the center and follows the path *c d*. Divide the line *c' d'* in halves, which will give the point *k'*. Describe a circle about the center through this point, and it will indicate the diameter at this point. This diameter may be transferred to the side elevation by dividing the line *c d* in halves and erecting a perpendicular *e f* at the dividing point. With *o k'* as a radius, lay off points *i* on the line *e f*, each side of the center line *a b*. These points will be found to fall inside the true taper. In like manner, points may be found at any place along the length of the work, and they will all fall inside the true taper. If a line be drawn through these points, it will represent the curve to which the work will be turned.

FITTING THE TAPER.

73. Methods of Testing.—After the roughing cut has been taken on a tapered piece, and before it is near the finished size, it should be tested in the piece it is intended to fit. The taper is carefully placed in the tapered hole, and first tested by the sense of feeling. If one end is much too small, as at *c*, Fig. 69, it can be detected by rocking the work in the hole. The plug will just fill the hole at the end *a*, and while the imperfect fit cannot be seen, it can easily be felt. In this particular case, the indications are that the dead center was moved too far out of line. It should be moved back a very slight amount and another cut taken over the work. After this cut, the work should again be

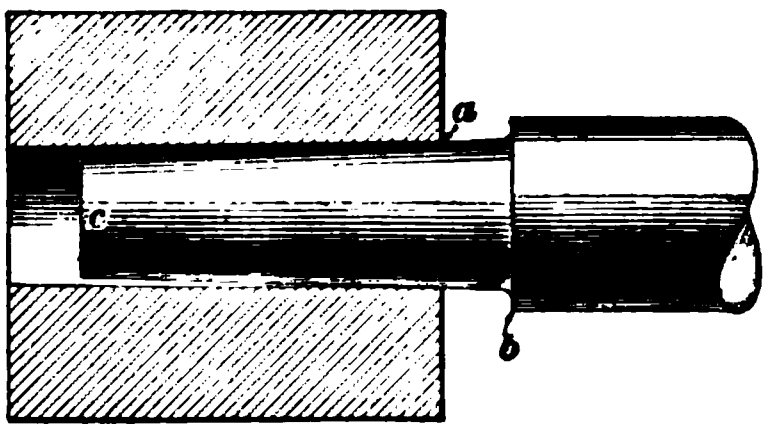

FIG. 69.

tested, and if there is no perceptible wabble, the fit may be tested still more closely by drawing three chalk lines along its length. The work is then placed in the hole and given a turn or two in a direction opposite the motion it had in the lathe. Upon removing the work, it will be seen that the chalk has rubbed off and is black at one end or the other, depending on which end was too large. In this way the work is tested and the lathe adjusted until the fit is satisfactory.

74. It should be observed that the work is tested and the machine accurately adjusted before the piece is turned to size. If the machine should be incorrectly set, and the piece at once turned to size at the small end, it might be found that the work was too small at the large end, and for this mistake there would be no remedy. In most cases it will be found that tapers must fit the hole exactly and go in a certain distance, up to a shoulder, as at *b*, or until the end *c* just comes through. If the taper is turned too small, even though it is a correct taper, it will allow the work to go in too far, which, in many cases, is as bad as an incorrect fit. In practice, the plug is left slightly large, so that it does not go in quite the desired amount. The final fitting is usually done by filing, or by grinding on a grinding machine, the filing or grinding being just enough to remove the tool marks. In fine fitting, the thickness of a chalk line is sufficient to make an error of some importance, so a substitute is used. One-half of the tapered piece along its length is coated with a very thin coat of Prussian-blue marking, it being applied with the finger and nearly all rubbed off, so that there is just enough left to give it color. The work is then tested in the hole or gauge and given a turn. If the marking is evenly distributed about the piece, it indicates a perfect bearing; but if it is rubbed off at one place only, it shows that it is too large at that point.

LATHE WORK.

(PART 2.)

BORING IN THE LATHE.

1. Definition.—The operation of turning or producing internally true cylindrical or conical surfaces is known as **boring.** This operation is performed by causing the work to turn upon its axis while held in a chuck or bolted to a face plate, the tool being fixed in the lathe carriage; or, by fixing the work securely to the carriage, while the tool revolves upon a bar placed between the lathe centers.

HOLDING THE WORK.

CHUCKS.

2. General Considerations. — Small regular work may best be held in the **lathe chuck.** The lathe chuck in principle consists of a heavy cast-iron disk which is screwed to the nose of the lathe spindle in place of the face plate. Radial slots are cut in its face, in which the jaws slide, these jaws being operated by means of

FIG. 1.

For notice of copyright, see page immediately following the title page.

screws or by a scroll. Fig. 1 shows a common form of lathe chuck. Fig. 2 shows a section of the same chuck with one jaw and its screw removed and placed above the chuck. These lathe chucks are made as large as 3 feet in diameter. Work that would require the use of very large chucks may be better operated upon by fastening or bolting it to the face plate of the lathe.

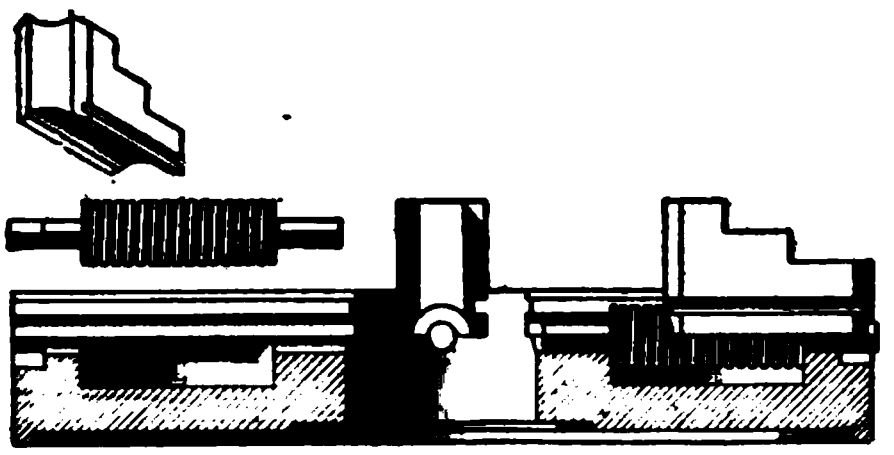

FIG. 2.

Chucks are made with two, three, or four jaws. Chucks similar to those shown in Fig. 2 may have the jaws reversed by unscrewing and putting them in in reversed position.

3. Classification of Chucks.—Chucks are classed as *independent*, *combination*, or *universal chucks*. Independent chucks are so arranged that each jaw is moved with an adjusting screw independent of the other jaws. Universal chucks are so constructed that when one jaw moves, the others move in the same direction a corresponding distance. Combination chucks are so constructed that they may be used either as independent or as universal chucks.

4. Universal and Combination Chucks.—Fig. 3 shows a **combination chuck** with a partial section moved from the back. A pinion *a* is cut on each adjusting screw, and these pinions engage with a circular rack *b* in the back of the chuck. When one adjusting screw is turned, the rack is rotated and each screw is turned an equal amount, thus moving each jaw a corresponding distance. To make this chuck independent, the rack must be lifted out of mesh with the pinions on the screws. The ring *c* rests against the back of the rack *b* and cams *d* project from the back of this ring. When the ring is partially rotated by means of the knob *e*, the cams *d* drop into pockets, thus allowing the ring and the rack to move away from the pinions sufficiently to

disengage. When this is done, each screw is disengaged and the chuck is **independent.** When the ring is partly rotated in the opposite direction, the cams lift the ring and rack so that the latter again engages the pinions, and the chuck is again **universal.** After using a combination chuck as an independent chuck for irregular work, the jaws will be out of true. To set the jaws true, adjust each to a circle that is drawn upon the face of the chuck, and then throw the rack into gear. Combination chucks can be used to good advantage for some classes of irregular work. The chuck is made independent, and after the work is once set true, the combination can be thrown in. When the work is removed, the jaws will all open together, occupying a relative position. If the next piece of work is set in the chuck in the same position in relation to the jaws as the first, the jaws can be tightened and the work will run true the same as the previous piece. A universal chuck may be constructed like the one shown in Fig. 3 with the ring *c* left out and the rack *b* in contact with the gears, or the jaws may be moved by a scroll which is a flat disk with a spiral groove cut in it.

FIG. 3.

5. Independent Chucks.—In this style of chuck, the jaws can be set to accommodate any irregular shapes. When it is necessary to use an **independent chuck** on work of a regular shape, the difficulty of carefully centering each piece may be avoided by marking two jaws of the chuck (in the case of a four-jaw chuck) after the first piece has been placed in position. When the piece is finished, it can be removed by loosening the marked jaws, the succeeding piece placed in position, and the marked jaws tightened. This will insure the second piece being properly set. This

operation may be repeated for any number of pieces that are alike. By this device, the one great objection to the use of the independent chuck is overcome, and work may be centered almost as quickly as in the universal chuck.

6. Advantages of the Different Classes.—Independent chucks are generally stronger and better adapted to irregular forms of work than either of the other types.

Universal chucks are best adapted to regular work; they save much time because of the ease and rapidity with which the work may be centered.

Combination chucks answer for both purposes, but require a little more care to keep them in proper condition.

USE OF CHUCKS.

7. Selection of Chuck for Work.—If the hole is to be bored concentric with the outside of the work, the universal chuck can be used. If the work does not run satisfactorily, it can be partly turned around in the chuck and tried in various positions. If this is not sufficient to make the part to be bored run sufficiently true, pieces of paper or brass can be placed between a jaw of the chuck and the work. When this amount of trouble is necessary, an independent chuck would be the better one to use.

8. Setting Work in an Independent Chuck.—To set a piece in an independent chuck, if the work is at all heavy, it can be held against the chuck by using a block of wood between the work and the dead center, as shown in Fig. 4. This will hold the work from falling out while the jaws are being adjusted. The jaws are tightened enough to hold the work. The lathe is started at a moderately fast speed and the work tested by holding chalk against the side of the work. If the work is untrue, the chalk will touch only on the high side. This indicates that the work should be moved. If the chalk touches the work as shown by the line *a b*, it

would indicate that the jaw opposite jaw *1* should be loosened and jaw *1* tightened, thus moving the work across the face

FIG. 4.

of the chuck. If the chalk touches between the two jaws, then the two opposite jaws must be loosened and the two front ones tightened a corresponding amount. The amount that each jaw is moved should be observed, as it will help to determine the amount of subsequent movements. When the work is to be turned or faced on a number of faces, each face should be considered in setting the work before beginning to turn any one face. For example, take the cone pulley, Fig. 5. Here the hole must be bored true, and the inside and outside of the cone bored and turned. If the casting is perfectly true, the work may be set by any one face and the others will naturally run true, but this is not apt to be the case. All parts should be tested to see if there is enough stock, and to see if the faces run true enough to turn to size.

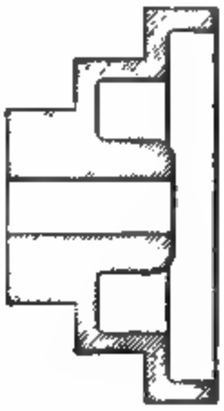

FIG. 5.

9. Example of Chucking.—Suppose a disk, as shown in Fig. 6 (*a*), with a hole cored very much to one side, is to be bored and turned to a given size. If set in the chuck so that the outside runs perfectly true, the cored hole would be so out of true that it could not be finished. If the cored hole is set to run true, then the outside could not be finished

all over. In such a case, the work should be so set that both the outside and the cored hole run out of true. By thus dividing up the eccentricity, it will be found that the work

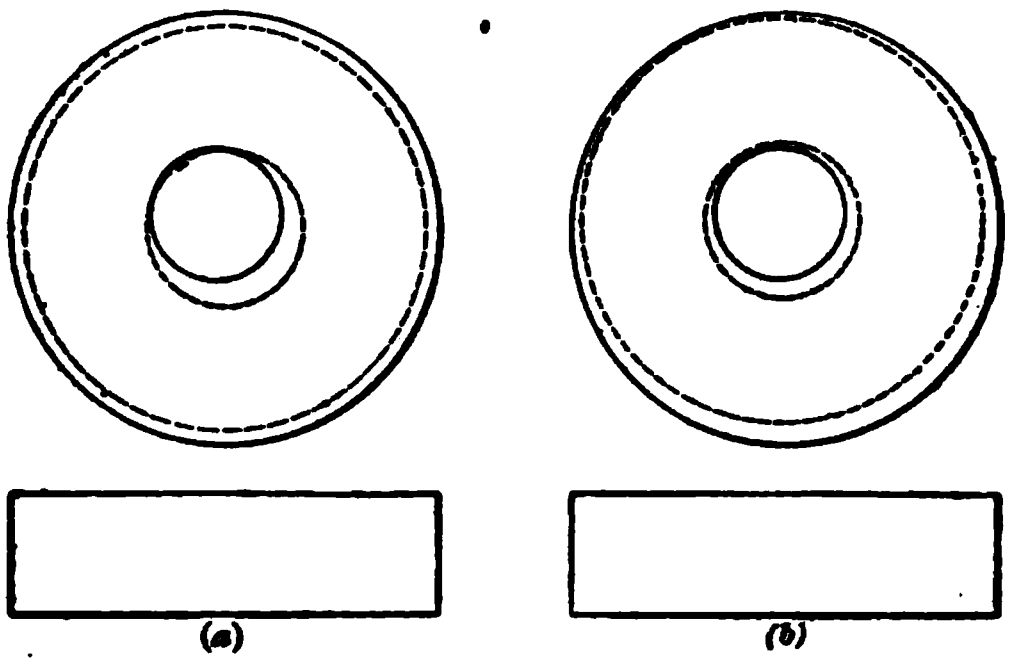

FIG. 6.

can be finished all over to the desired size, as shown by the dotted lines, Fig. 6 (*b*).

10. Spring of Work From Pressure of Jaws.— When the work is light or frail, there is much danger of springing because of the pressure of the jaws necessary to hold the piece. In chucking a piece, advantage should be taken of the shape of the work in order to have the jaws of the chuck come against the more solid parts. For example, in chucking a pulley, it should be so set that the jaws come opposite the arms of the pulley. Suppose that a ring is held in the chuck, as shown in Fig. 7. When the jaws are tightened, the work is sprung opposite each jaw. If a cut is taken, the work will be bored true and round while under pressure of the jaws. When this pressure is removed, it

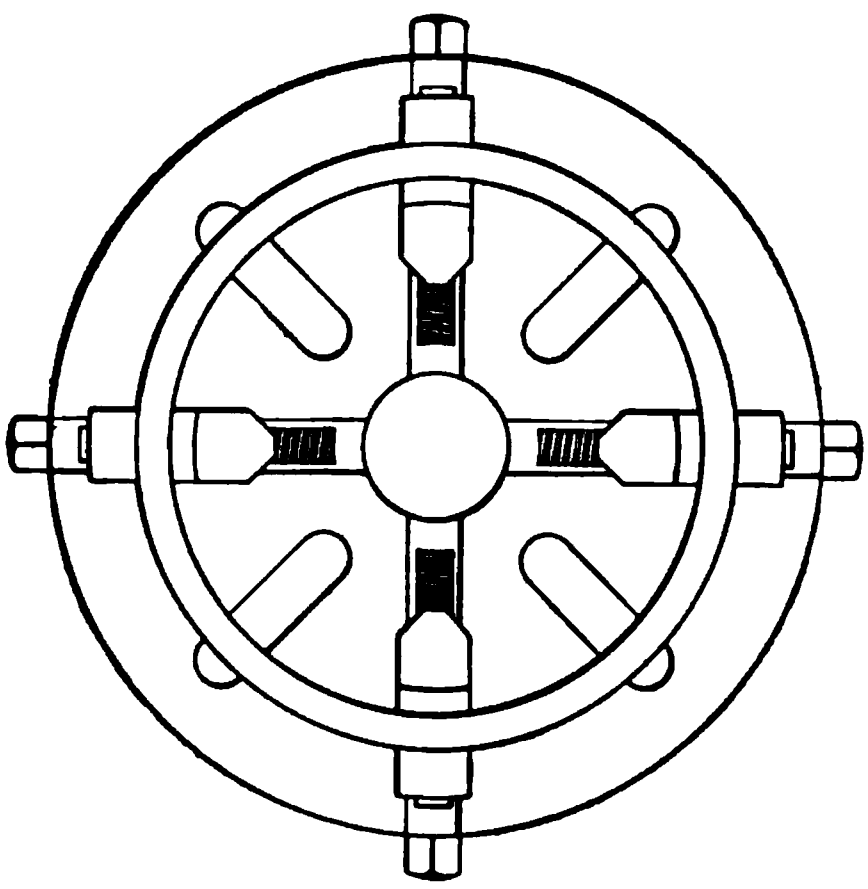

FIG. 7.

will be found that the work will no longer be true but will spring back to its normal shape. This will cause the work to be untrue, as shown in Fig. 8, the dotted lines indicating the true circle. In such cases, the jaws of the chuck should be loosened before taking the finishing cut, so that the pressure will be just sufficient to hold the work.

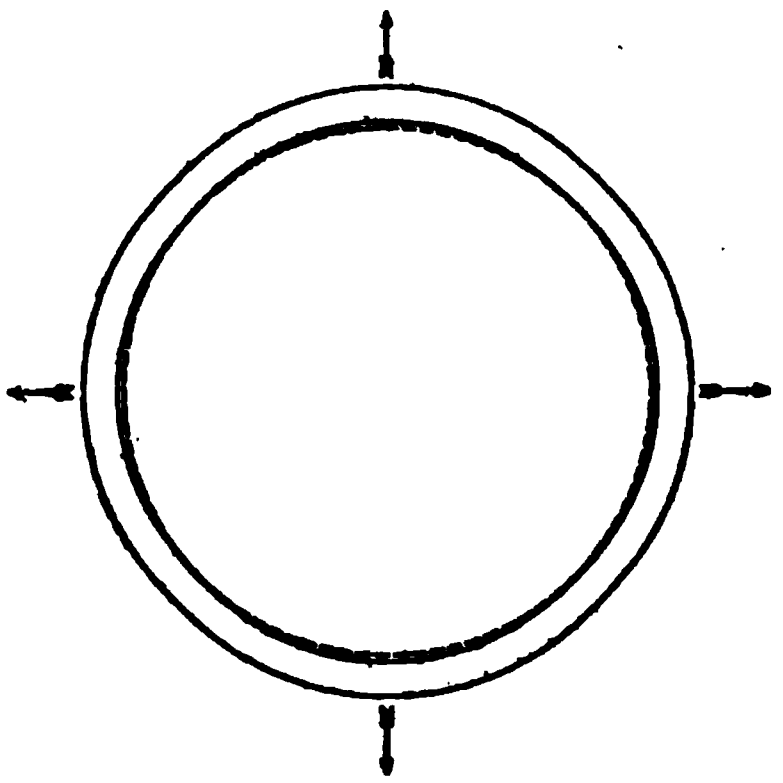

FIG. 8.

11. Care of Lathe Chucks. — Lathe chucks should be treated with care, especially universal chucks, since their value depends in many cases on their ability to hold the work true. When these chucks are abused by hammering or by unduly heavy strains, they become sprung and thus lose their characteristic value. In putting a chuck on the lathe, it should be held carefully against the nose of the spindle while the lathe is turned by hand. It is not good practice to start the lathe by power and hold the chuck against the spindle, expecting the thread in the chuck to catch squarely on the lathe; neither is it good practice to let the spindle screw into the chuck up to the thread with a bang. This often causes the chuck to stick so tightly to the spindle that it becomes quite difficult to remove it. When the chuck does stick on the spindle, it may be loosened by running the lathe backwards at the slowest speed and inserting a block of wood between the jaw of the chuck and the lathe bed.

SPECIAL CHUCKS.

12. Some work is of such shape that the ordinary lathe chuck will not hold it with sufficient rigidity to take heavy cuts. In this case, **special chucks** may be made, when

there are enough pieces to be turned to warrant the cost. For example, the cone pulley shown in Fig. 5 may best be held in a special chuck. Such a chuck is shown in Fig. 9. This chuck consists of a bell-shaped casting *a*, which is fitted to the spindle *b* of the lathe. The outer end is bored to receive the work *c*, which is held in place by setscrews *d* at the sides. This form of chuck holds the work with great rigidity and makes possible the taking of heavy cuts that could not otherwise be accomplished. For special work, other forms of chucks may be devised that depend on the shape of the work.

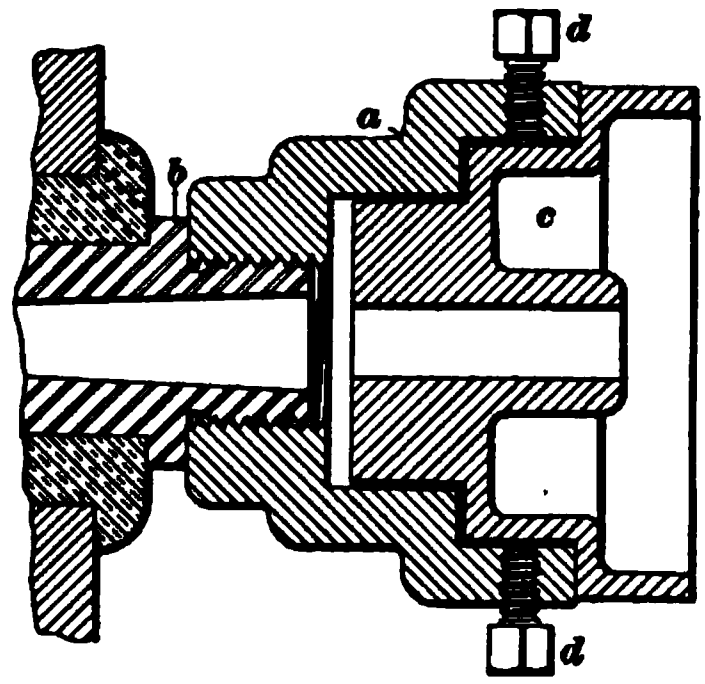

FIG. 9.

CHUCKING ON THE FACE PLATE.

13. Use of Face Plate.—When the work is large or heavy, or for other reasons cannot be held in the chuck, it may be fastened to the face plate by means of special blocks, bolts, or strips used for that purpose. It is essential in setting work on the face plate that it is secured firmly, so that it will not slip or change its position because of its weight or the pressure of the tool.

14. Adjustable Jaws for Face Plates.—For securing work upon the face plate, and in order to enable the operator to successively chuck similar pieces with the least amount of labor, adjustable jaws are frequently clamped on the face plate. These adjustable jaws usually consist of a block, as *a*, Fig. 10, in which jaws *b* work. The blocks are clamped to the face plate by means of T bolts *c*. This really makes a special form of chuck of the face plate. A face plate fitted with these adjustable jaws is shown in Fig. 11. The jaws have the advantage that they can be

placed evenly, as shown, or they can be arranged unevenly to accommodate irregular work, either placing some of the jaws nearer the center than others or spacing them irregu-

FIG. 10.

larly in the different slots in the face plate. The entire piece that is attached to the face plate is usually called a *jaw*, but in reality only the portion *b* is the jaw, and these

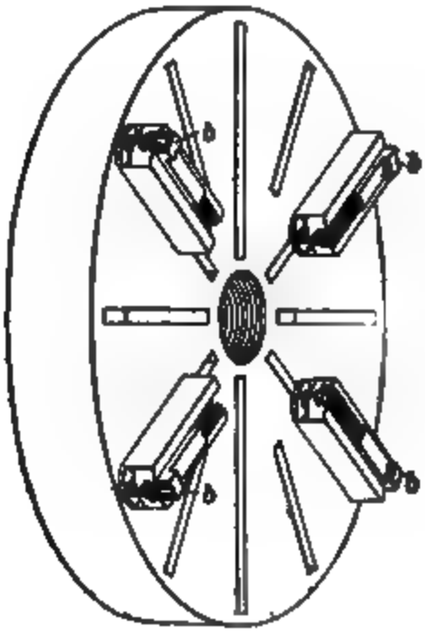

FIG. 11.

FIG. 12.

pieces *b* may be made reversible, thus giving a greater range of work that can be held by this device.

In some cases, a more simple form of jaw may be used,

as shown in Fig. 12. These consist of castings *s* bolted to the face plate and provided with setscrews *r* for securing the work. The shoulder below the points of the setscrew should be turned off so that the dimension *a* is equal on all of them. This will enable the operator to place work against these shoulders during chucking.

15. Example of Clamping Regular Work.—Fig. 13 illustrates a very simple method of clamping a large flange to a face plate when it is only desired to bore the hole in the center of the flange and to face the hub *f*, the surface *r* being left rough. This method will do very well where the back face of the flange may be clamped directly to the face plate or on parallel blocks, and where but a single hub is to be operated upon. If it becomes necessary either to face the surface *r* or to operate upon a number of pieces, it is best to use jaws similar to those illustrated in Figs. 11 and 12.

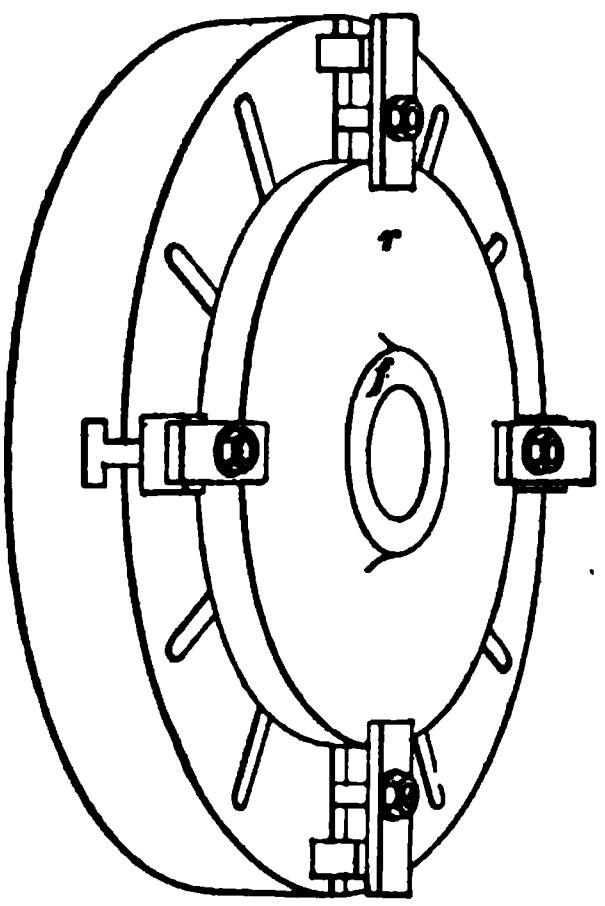

FIG. 13.

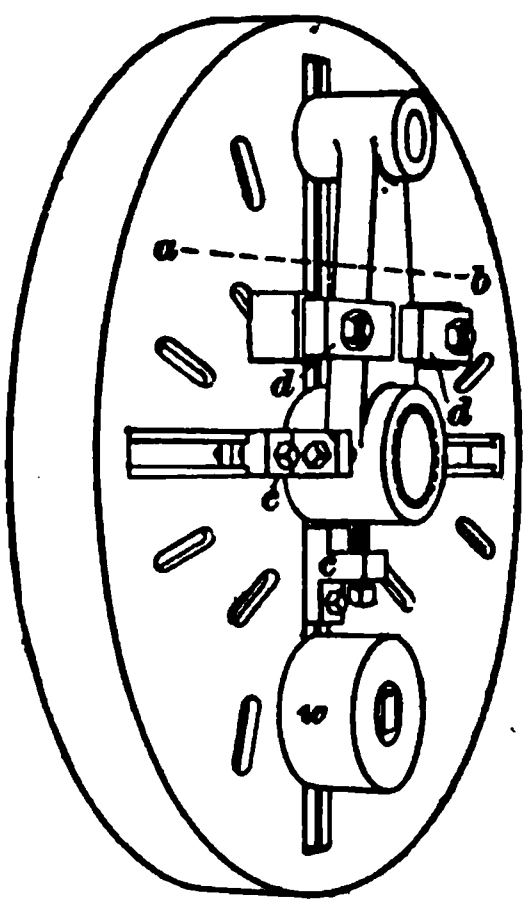

FIG. 14.

16. Clamping a Rocker-Arm.—When it is desired to clamp a rocker-arm similar to the one shown in Fig. 14, this may be accomplished by using three chucking-block jaws similar to those shown in Fig. 12. These are placed

at *c*, *c* and bear against three sides of the large hub of the rocker-arm. The work is held securely against the face plate by means of the two clamps *d*, *d*, as shown in Fig. 14. Fig. 15 is a section on the line *a b*, Fig. 14, and shows the arrangement of the clamps and blocking; *e* is the arm, *d*, *d* are the clamps, *g*, *g* the blocks, and *f*, *f* the bolts. Care should be taken to see that the blocks *g* are of exactly the height of the work, so that the clamps *d* will set level or parallel to the face plate. The bolts *f* should be placed as close to the work as possible. If much strain is brought upon the work *e* by the clamps *d*, it is evident that there will be danger of springing the arm between its hubs or bosses. To overcome this, a block may be fitted under the arm, or a planer jack *j* may be adjusted under the arm, as shown in Fig. 15. In order to balance the portion of the rocker-arm extending to one side of the center and the clamps and bolts *d* and *f*, a counterweight *w* may be attached to the opposite side of the face plate, as shown, and adjusted in or out until it balances the whole exactly. Such work as this, which has a number of faces that must be finished in certain relations to one another, should be laid out before attempting to set it in the chuck or on the face plate. In Fig. 14, the work is to be bored to the circle indicated by the dotted lines, and may be set so that it will run true with this circle by testing with a scriber or point held in the tool post.

FIG. 15.

17. Use of Paper on a Face Plate.—When a finished surface is to be clamped against the face plate or any other metal surface, the danger of its slipping can be greatly reduced by putting a sheet of paper between the two surfaces. If this precaution is not taken, it will be found

almost impossible to clamp the work so that it will resist the action of the boring tools.

18. Pulley Clamp.—Pulleys that have to be bored and turned can be clamped by means of the arms. Fig. 16 illustrates a clamp intended for this purpose. The block *a* is bolted to the face plate and supports an adjustable clamp *c* having a turned portion that fits into a socket in the block *a*, and is secured by the setscrew *d*. The pulley arm *b* is held in the clamp *c* by the setscrew *e*. Similar clamps can be devised for holding a great variety of irregularly shaped work.

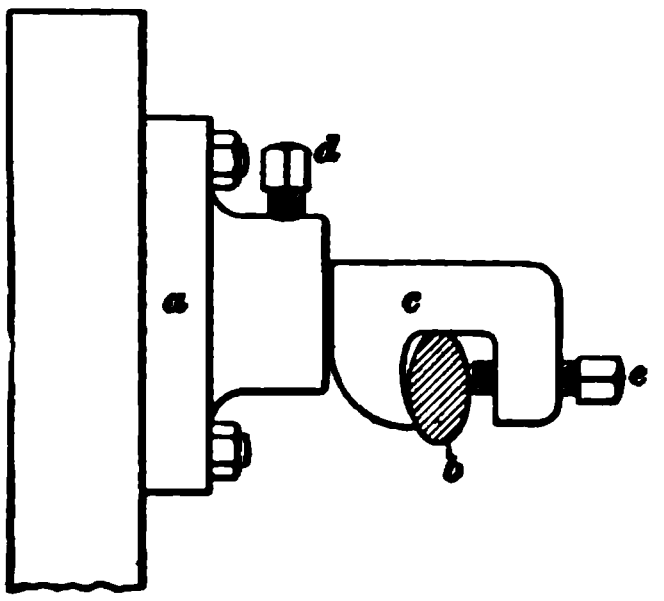

FIG. 16.

19. Angle Plate.—A very convenient attachment for face-plate work is the **angle plate,** as shown at *a*, Fig 17. This angle plate is made so that its two faces make an angle of 90° with each other. When it is desired to finish two faces of a piece square with each other, as, for instance, the flanges of a pipe elbow, one face is clamped to the angle plate as shown. This holds the other face of the elbow in such a position that it will be cut square with the first face. This angle plate may be used to great advantage for many operations in face-plate work.

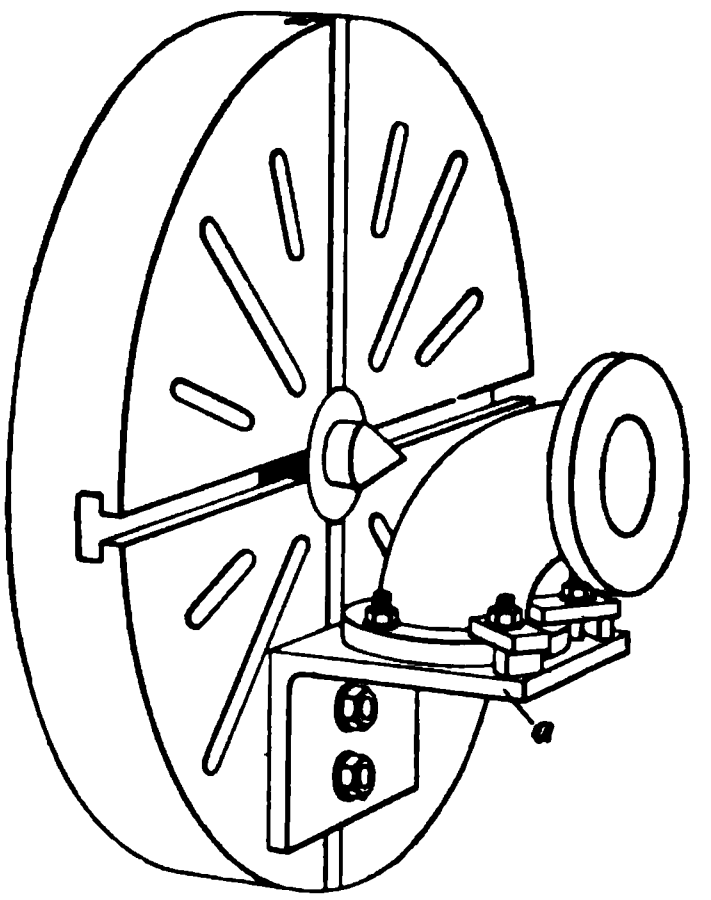

FIG. 17.

The methods of fastening work to the lathe face plate are similar to those for fastening work to the platen of the planer, or to the table of the boring mill.

TAKING THE CUT.

20. The Tool.—Suppose a shaft collar 2 inches long is to be bored $1\frac{15}{16}$ inches in diameter. The tool used is a boring tool, as shown in Fig. 18. The tool is clamped rigidly in the tool post so that it lies parallel with the lathe V's and so that it will pass through the hole in the work. The tool should be set as low as possible in the hole.

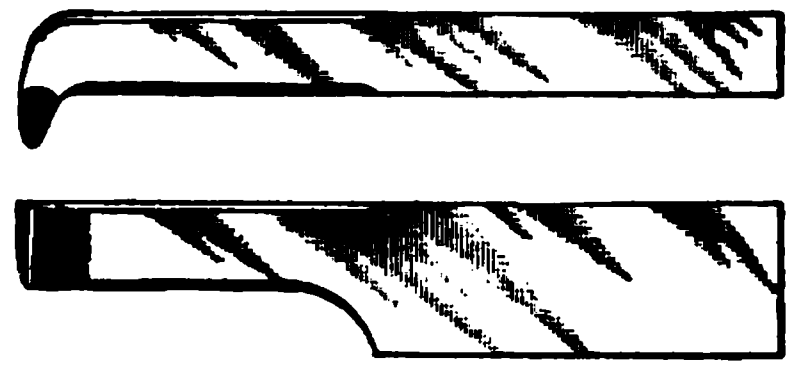

FIG. 18.

21. Roughing and Finishing.—The cut is started at the front end. Roughing cuts should be taken as heavy as possible. They can never be taken very heavy because of the spring of the tool. After the first cut, the hole should be calipered to see if it is boring parallel. If it is found to be tapered, lighter cuts should be taken. Sometimes the hole may be made parallel by reversing the direction of the feed, which will start the cuts at the back end of the hole.

MEASURING BORED HOLES.

22. Use of Calipers and Gauges.—Greater skill is required for measuring the diameters of holes than for measuring outside work. The holes may be measured by the use of plug gauges, limit gauges, or inside calipers. When inside calipers are used, they may be set from a standard ring gauge, from a scale, or from a pair of outside calipers that have previously been set from a scale. When setting inside

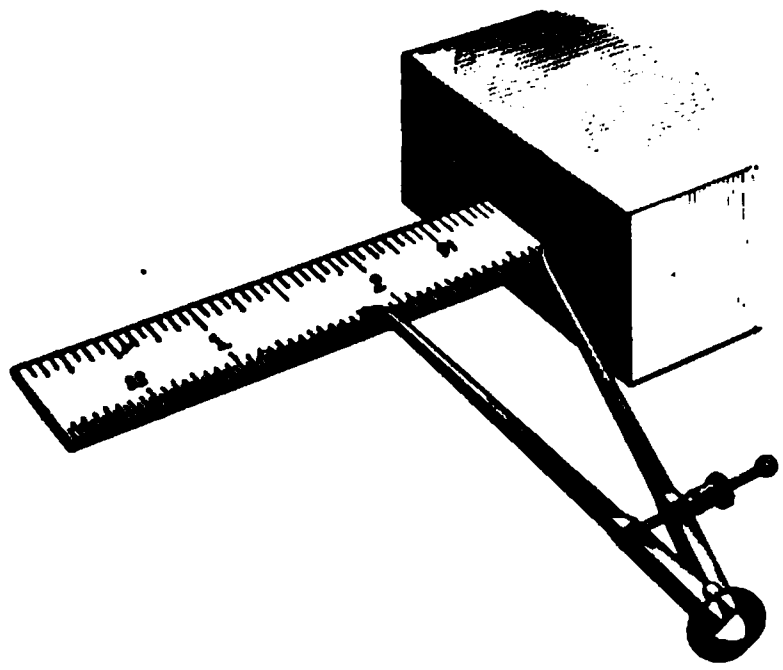

FIG. 19.

calipers from a scale, one end of the scale should be held squarely against a block, as shown in Fig. 19, and the caliper adjusted to the line on the scale. When work is measured with inside calipers that have been set from outside calipers, there are three chances for error: *first*, in adjusting the outside calipers; *second*, in transferring the size to the inside calipers; *third*, in the final measuring. It will be seen by reference to Fig. 20 that in order to measure accurately, the calipers must be held in line with the axis *A B* of the work. If the calipers are held in any other line, as, for example, *C D*, the hole would appear too large, since, with one point resting against the work at *b*, the other point *a* would be in the position *a'*. When the solid plug gauge is used for testing, extreme care is necessary. If the hole is the exact size, the gauge will enter only when its axis is held exactly in the line *A B*; because of this, the work is often bored too large, since sufficient care is not used in making the trial.

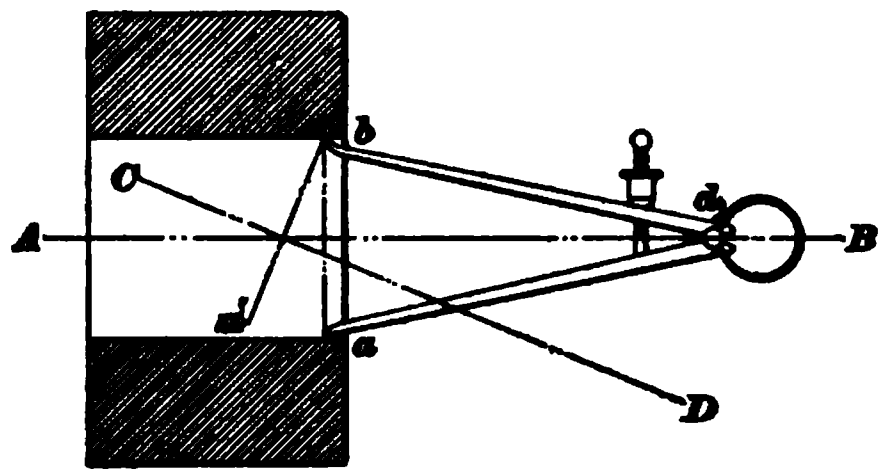

FIG. 20.

If, in calipering a hole, it appears to be very close to size, a second cut may be run through without adjusting the tool deeper. A sufficient amount may often be removed by this second cut, its depth depending on the spring of the tool during the previous cut. When the work is large enough to admit heavy tools, they should be used to avoid the spring as much as possible.

CHUCKING TOOLS.

23. Method of Holding Chucking Tools.—When the holes are small, 3 inches or less in diameter, they can be more rapidly and accurately bored by using special **boring,** or **chucking, tools.** These forms may be held in a special holder on the carriage, or in the tailstock in place of the

dead center. The latter method is the more common. When a chucking tool is to be held in the tailstock, care should be taken that it is perfectly in line with the live spindle, otherwise trouble will be encountered.

FLAT DRILLS AND REAMERS.

24. Flat Drills and Holders.—For rough boring in cored holes, the flat drill shown in Fig. 21 is sometimes used. This drill may be made from flat bar steel with the point ground like the point of an ordinary flat drill. The other end has a large center hole for receiving the dead center. In using the drill, a specially made holder is employed, as shown in Fig. 22. This holder consists of a flat piece of iron or steel with one end bent at an angle. A slot *a* is cut through this end sufficiently large to allow the drill to pass through.

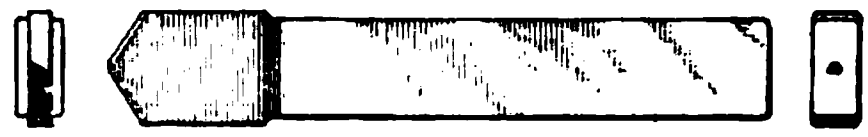

FIG. 21.

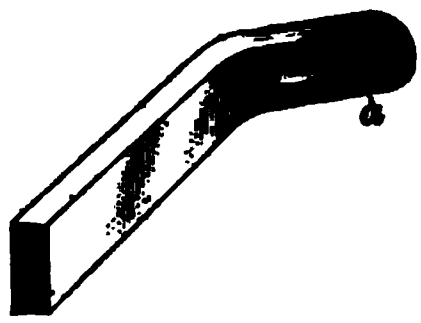

FIG. 22.

25. Operating a Flat Drill.—When used, the holder, Fig. 22, is clamped in the tool post so that the opening *a* comes opposite the center of the hole in the work. The drill is passed through the opening *a* and held against the work by pressure of the dead center. The holder keeps the drill from revolving. In starting the cut, there will be a tendency for the drill to wabble, owing to the irregularity of the cored hole. In order to start the drill true, a monkeywrench is used on the drill, as shown in Fig. 23. By pulling on the wrench in the direction of the arrow, the drill is

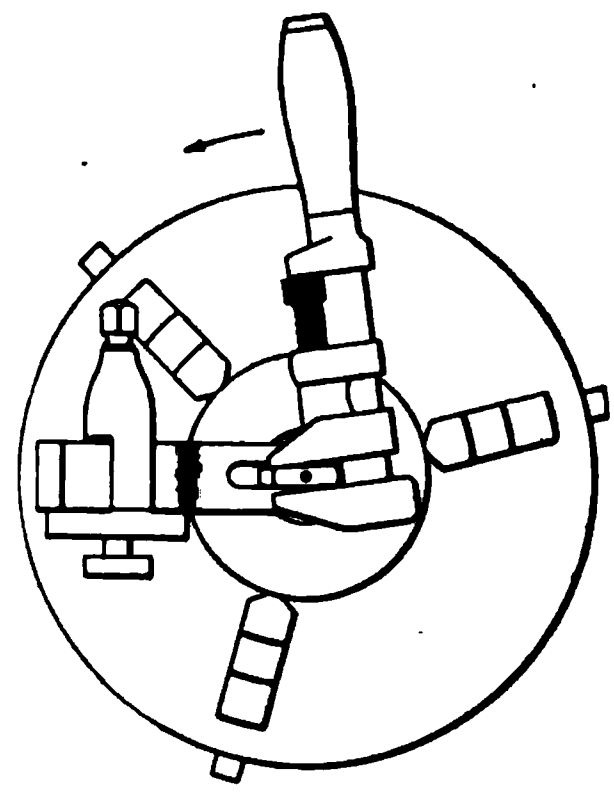

FIG. 23.

rotated sufficiently to make it pinch in the holder. While in this position, the drill is fed into the work until the entire cutting edge is in metal, after which the wrench is taken off the drill. Holding with the wrench causes the drill to start true. When once started, this drill cuts well, but the hole will not be truly cylindrical.

26. Flat Reamers, or Turned Drills.—To finish the hole more perfectly, a **flat reamer,** or **turned drill,** shown in Fig. 24 (*a*), may be used in the same manner as the flat drill. This reamer is made of flat bar steel and turned parallel on the sides *c* and *d* to a diameter equal to the diameter of the desired hole. The cutting edges are at *a* and *b*. This reamer is sometimes covered with wood, so that it will just follow the hole being bored. These wooden faces are used to keep the reamer from chattering and to guide it so that the holes will be more nearly accurate. Such wood-covered reamers are sometimes called **wood reamers.**

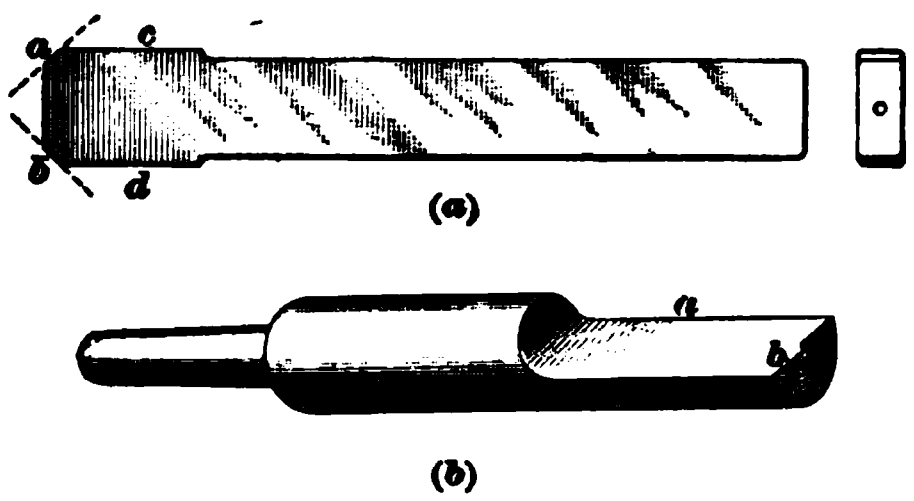

FIG. 24.

27. Cannon Drills.—Fig. 24 (*b*) shows a **cannon drill.** Half the face is cut away, as shown at *a*, while *b* is the cutting edge.

ROSE AND FLUTED REAMERS.

28. Rose Reamers.—A better form of tool for cored holes, known as a **rose reamer,** is shown in Fig. 25. The

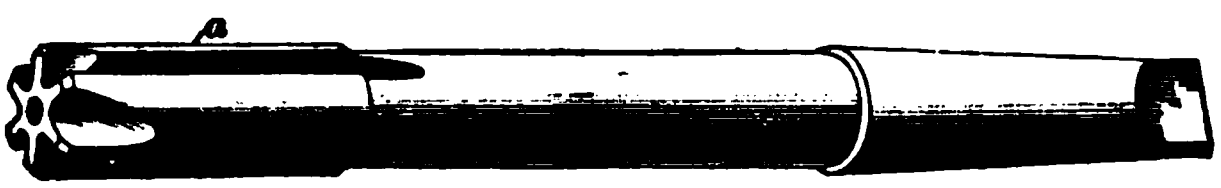

FIG. 25.

part marked *a* is ground round and parallel to the diameter of the desired hole. This form of reamer will generally

produce holes slightly larger than the size, due to the wear of the reamer on the walls of the hole.

29. Three-Fluted Chucking Reamer. — For deep holes, the **three-fluted chucking reamer** shown in Fig. 26 is an excellent tool. Because of the spiral flutes,

FIG. 26.

there is less danger of the shavings clogging than there is in the style shown in Fig. 25. The cutting is done by the edges *a*, and the chips pass away through the larger flutes; the small flutes *b* are formed for clearance and to allow the oil or other lubricant to flow to the point of the reamer.

30. Fluted Chucking Reamer.—Fig. 27 represents a **fluted chucking reamer** for finishing holes smooth and true to standard size. In this form of reamer, the cutting edges are along the lines *a b*. When used in connection

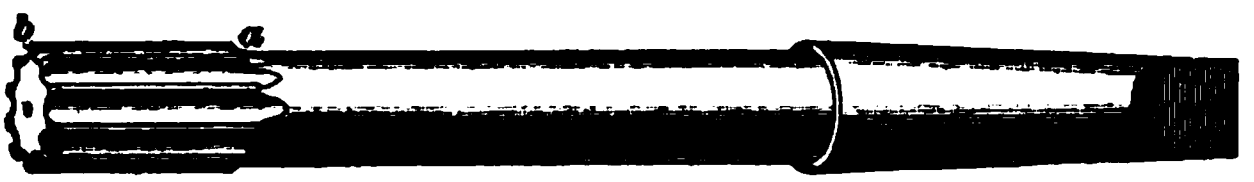

FIG. 27.

with the rose reamers, the latter should leave about .005 inch diameter for this reamer to remove in finishing. Since it is intended for finishing holes to exact diameter, it should be used with considerable care. The cutting speed and the feed are therefore reduced.

31. Shell Chucking Reamers.—Fig. 28 (*a*) shows a **shell chucking reamer** of the rose-reamer type, and in Fig. 28 (*b*) is shown a shell reamer of the fluted or finishing-reamer type. These reamers are cheaper and in many cases more convenient than the solid reamers just described.

They are used on an arbor as shown in Fig. 28 (*c*). One arbor can be used for quite a large range of sizes of reamers.

FIG. 28.

32. Boring Bars for Chucking.—Fig. 29 shows a chucking tool that can easily be made for odd sizes. The blade or cutter *c* is held in the bar by a setscrew *s*. Different sizes of cutters may be made at little expense, which

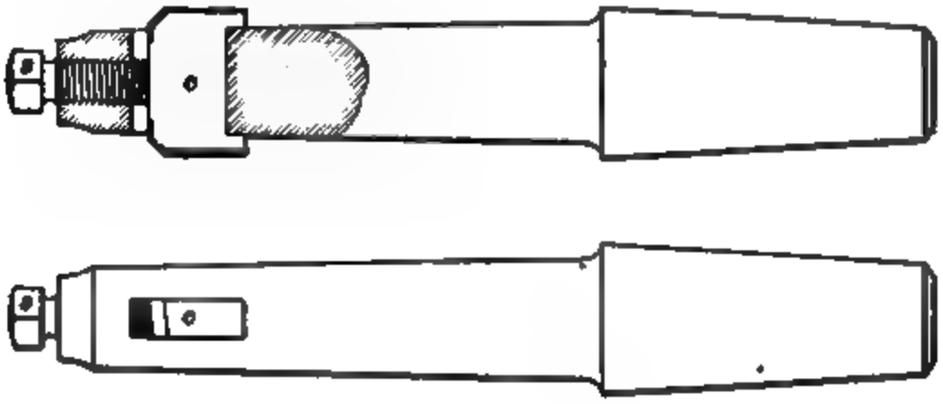

FIG. 29.

will take the place in many instances of the more expensive standard chucking tools. When the holes to be bored are long, a bar can sometimes be used, as shown in Fig. 30. The cutter *c* is held in the slot cut in the bar by a setscrew *s*. One end of the bar is fitted to the tailstock, while the other end fits a cylindrical bushing *b* in the headstock. This gives support for each end of the bar, which is very desirable on some kinds of work when it is necessary to have the hole run true.

33. Starting Chucking Reamers True. — If the cored hole does not run true, the chucking reamer will not

FIG. 28.

start true, the tendency being to follow the cored hole. When it is desired to start the reamer true, it may be done by using a common boring tool and boring out the mouth of the hole to nearly the correct size, so that the reamer will enter $\frac{1}{8}$ inch or so. This will give a bearing all around and hold the reamer true.

34. Drilling Solid Material. — The tools thus far described, with the exception of the flat drill, are for enlarging holes that have been previously drilled or cored. The flat drill will pierce a hole in the solid metal as well as it will follow cored holes, but it will not cut as freely as the twist drill. Twist drills are often used in the lathe in a special holder or socket fitted in the tailstock, the drill being fed into the work the same as the chucking tools just described.

35. Starting a Twist Drill.—It is essential that the twist drill be started to run true and that its point be centered before the outer corner of the drill has begun to cut. After the outside corner of the drill has entered the work,

its position cannot be changed. It is well to make the starting points true by using a tool in the tool post, as shown in Fig. 31. This tool is forged with a thin flat point and

FIG. 31.

ground like the point of a flat drill. The hole is started true with the tool, after which the twist drill in the tailstock will follow in the hole previously started. When this starting tool is not at hand, the twist drill may be started true by placing the butt of an ordinary lathe tool in the tool post and adjusting it so that it just touches the twist drill. This will steady the point of the drill sufficiently, so that in most cases it will start true.

BORING WITH A BORING BAR BETWEEN CENTERS.

36. Use of Boring Bar.—When the work is heavy or the holes comparatively long, the work of boring can quite often be accomplished by reversing these operations, clamping the work to the carriage and revolving the tool in the work. When this is done, a bar is passed through the work and held between the centers. This bar is called **a boring bar.** It carries the blades or cutters that do the boring. The boring of an engine cylinder furnishes a good example of a typical operation performed in this manner.

TYPES OF BORING BARS.

37. Boring Bars With Fixed Cutters.—There are two types of boring bars; one has a fixed cutter in the center that may project sufficiently to cut only on one end, or it may project equally on each side of the bar and cut at each end. Such a bar is shown in Fig. 32. The cutter is

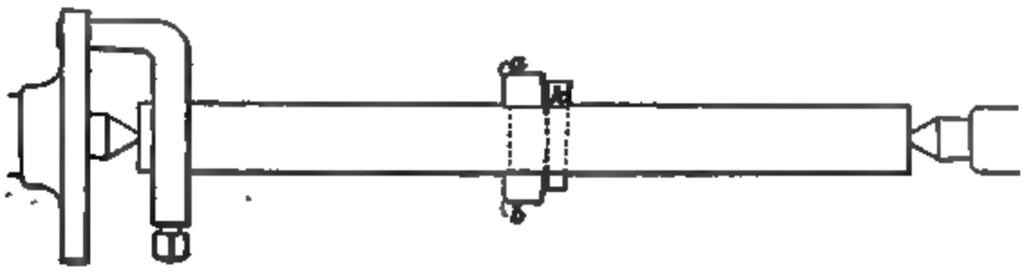

FIG. 32.

fitted into a rectangular slot and held in place by a key *k* driven in at the back. The cutter blade should previously be turned to the desired diameter before hardening. The cutting is done by the points or edges *a* and *b*. When this style of bar is used, it must be twice as long as the hole to

FIG. 33.

be bored, since there must be room for work at one side of the cutter before starting, and room for it to pass beyond the cutter after the cut is finished.

When the work is large so that the cutter would project a considerable distance beyond the bar, it is best to fix a cutter head to the bar. Such a head is shown in Fig. 33. It consists of a cast-iron collar carefully fitted to the bar and kept from turning by a key and setscrew. There are generally four blades or cutters *a* inserted in the head and held in place by the setscrews *s*, *s*; *b*, *b* are setscrews for adjusting the blades. It will be seen that by tightening these screws, which stand against the ends of the blades, the blades will be pushed out of their sockets. As the blade becomes short, pieces must be put between the screw and the blade to make the screws effective.

38. Boring Bars With Sliding Heads.—When much heavy boring is done, the second type of boring bar, shown in Fig. 34, is more desirable. This bar *a* is fitted with a head *h*, which slides upon the bar *a*. The head is

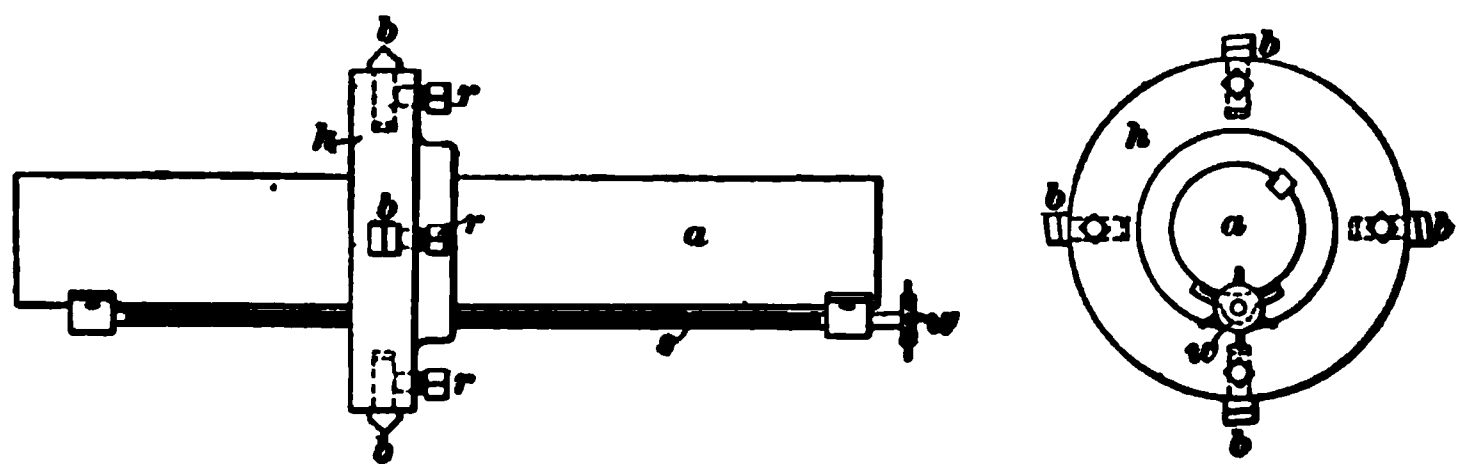

FIG. 34.

kept from rotating on the bar by means of a key that slides in a spline cut the entire length of the bar. Four cutting tools *b* are used and held in place by setscrews *r*. Clamps or wedges are often used for holding the tools in the head. A feed-screw *s*, supported in bearings at either end of the bar, passes through a nut in the sliding head. By revolving this feed-screw, the head is moved along the bar. This feed-screw is generally set in a slot cut in the side of the bar. By doing this, the screw is protected.

39. Boring an Engine Cylinder.—Fig. 35 shows the general scheme of using this type of bar when boring an

engine cylinder. The cross-slide is removed from the lathe and the work set upon blocking and clamped with bolts in its correct position. Considerable care should be exercised in setting this class of work upon the machine, to see that it is so set that all faces can be finished in their correct relation to one another and to correct sizes. It will be seen that the bar passes through the work, is held between the lathe centers, and is driven with a dog. One of the various methods of operating the feed mechanism is by means of the star feed, as shown in Fig. 34. A star wheel *w* is fastened to the end of the feed-screw. This revolves with the bar. A pin *t*, Fig. 35, is fastened in some convenient place so

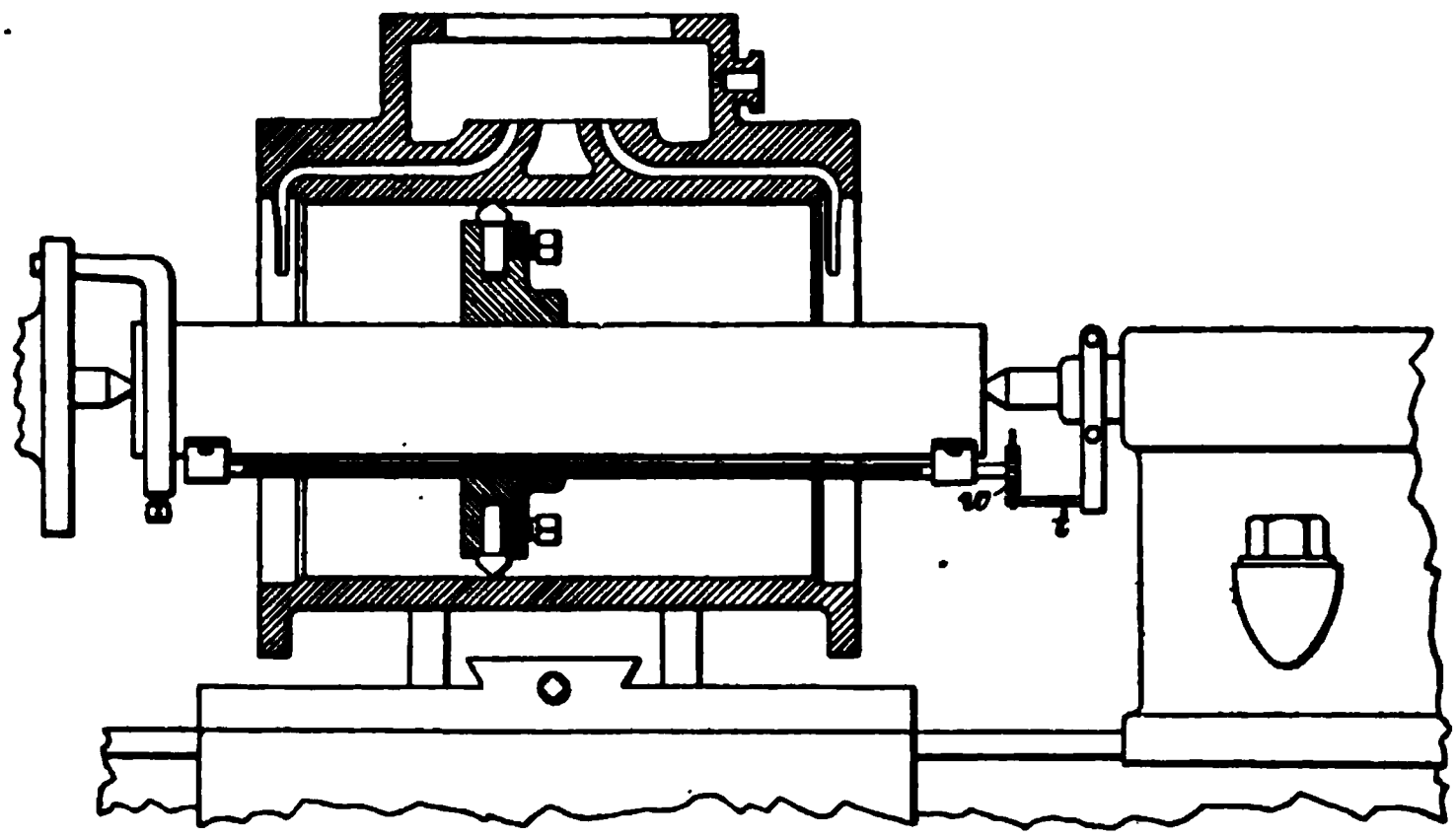

FIG. 35.

that for each revolution of the work it strikes one of the arms in the star wheel and gives it a partial revolution. When a coarser feed is desired, two or more pins may be arranged to act one after the other. This revolves the feed-screw and so gives feed-motion to the head. Another method of revolving the feed-screw is to put a gear-wheel in the place of the star wheel. A second gear is fixed to the lathe center so that it gears with the wheel on the feed-screw. As the bar revolves, the gear and the feed-screw rotate about the fixed gear, thus revolving the feed-screw

upon its axis. If the gears are of the same size, the screw will make one revolution for each revolution of the bar. By varying the proportion of these gears, various rates of feed may be obtained.

This form of bar is more desirable for large work than the type of bar with the fixed head. Because of the sliding head, the bar need be but a little longer than the work to be bored. This shortening of the bar gives it greater rigidity. When the bar has a sliding head, the work does not need to be fastened to the carriage of the lathe, but may be more securely bolted to the lathe bed. This also adds to the rigidity of the work.

TAKING A CUT WITH THE BORING BAR.

40. Adjusting the Tools.—After the work has been carefully set, so that it is known to be correct, the cut is started at one end. One tool is used at first until a sufficient depth of cut is obtained and a short distance bored into the work. After this true place is turned, the other tools are carefully adjusted so that they each do their share of the work.

41. Shape of the Boring Tools.—The tools for the roughing cuts are ground round on the point similar to the diamond point. Very little clearance should be given. The first roughing cuts are generally made deep, with a moderately fine feed. The finishing cuts are made with a very coarse feed. The finishing tool, therefore, has a broad cutting edge with a minimum of clearance.

42. Spring of the Bar and Work.—It will be seen that the boring bar held between the lathe centers is limited in its power by the strength of the lathe center. When each of the four tools is doing its share of the work, the bar is well balanced in the cut and the strain on the lathe centers is small. If the cut is very heavy on one side and light on the other, the opposite cuts will be unbalanced, the heavier cut tending to spring the bar away and into the

lighter cut on the opposite side. This action will bring a great strain upon the centers of the lathe. Special boring mills have been designed for this class of work and will do it better and more rapidly than the lathe. At the same time, the lathe is always at hand for special jobs when boring mills or boring lathes are not available.

BORING TAPERS.

43. Boring With Taper Attachment or Compound Rest.—Taper boring is often best done on the lathe. If the work is held in the chuck, the taper may be bored by using the taper attachment. For this, the attachment is set in the same way as for taper turning, and the operation of taking the cut is the same as in boring cylindrical holes. When the holes to be bored are short or an abrupt taper is desired, the compound rest may be used. For some kinds of work, taper chucking reamers are used. They are held in the tailstock the same as the ordinary chucking tools.

44. Reaming Tapers.—Tapers may be reamed by a tool or tools inserted in the cutter head of a boring bar. The tools must be in the form of blades as long as the hole, and set so that their cutting edge is at the desired angle.

45. Boring Tapers With a Boring Bar.—When the boring bar with the sliding head is used, a taper hole may be bored in work fastened to the carriage or bed by setting over the headstock end of the bar. This is accomplished by fastening a false center *c*, Fig. 36, to the face plate, which may be adjusted at any distance from the true center of the lathe. The amount that this center is to be set out of line may be estimated the same as the amount that the dead center is set out of line in plain taper turning. When the bar is thus set out of line, it will be noted that but one cutter point *p* can be used. This should be so set that when the false face-plate center *c* is at the front and at the same height as the dead center, the cutter point *p* is also at the same height.

The boring bar shown in Fig. 36 (*b*) may be used for either straight or tapered holes. The bar *a* is fastened to

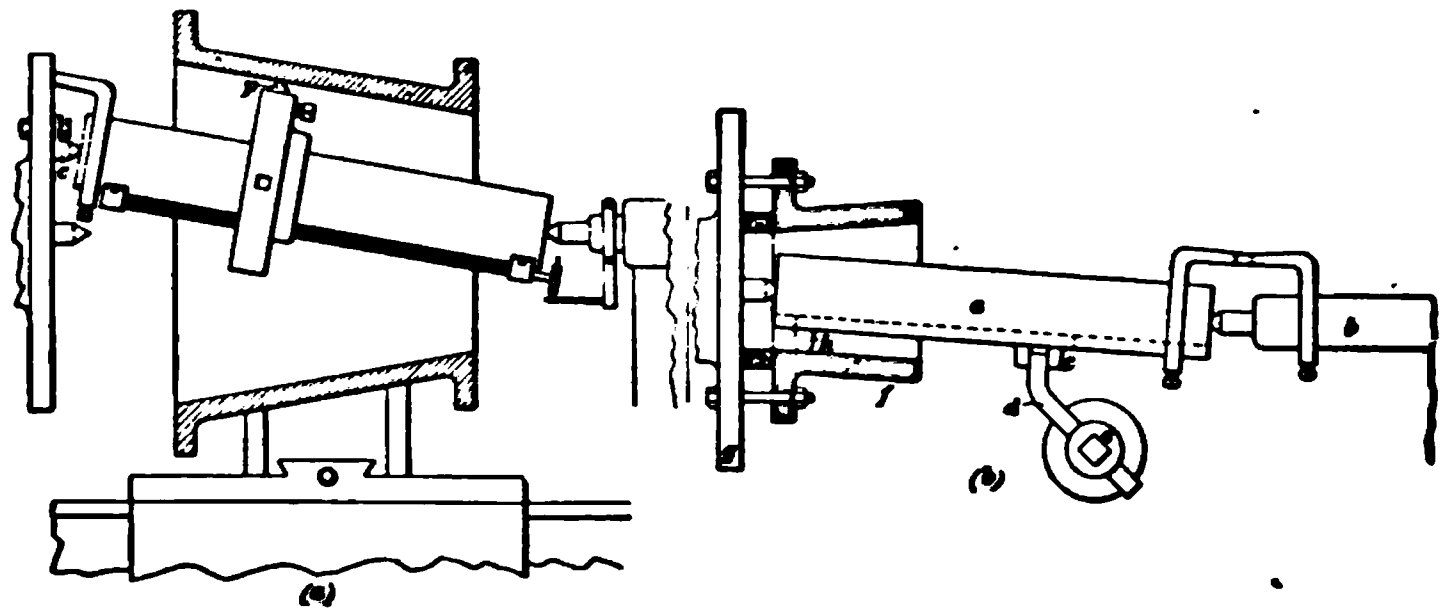

FIG. 36.

the dead spindle *b* so that it cannot rotate. It is provided with a T or dovetail slot its entire length, which carries a sliding cutter. This cutter has lugs *c* which engage the end of a feeding piece *d* held in the tool post *e*. The work *f* may be clamped to the face plate *g* as shown. As the feeding piece *d* is fed along the lathe, it will force the sliding cutter fitting the T or dovetail slot to feed along the bar *a*, so that the cutting point *h* will bore either a tapered or a cylindrical hole, depending upon the position of the dead center. The live center rotates in a stationary bar and hence it should be hardened and supplied with oil. It is also necessary to feed the tool post in by means of the cross-slide as the cut advances so as to prevent the lugs *c* from passing out of contact with the feeding piece *d*.

RADIAL FACING.

FACING OF REVOLVING WORK.

46. Definition of Radial Facing.—When a true flat surface is produced with a lathe, it is called a **radial face.** The end of a piece that is squared up between centers is a radial face, but the term **radial facing** is generally applied to larger pieces of work that have to be held in the chuck or on the face plate.

47. Precautions to be Taken in Radial Facing.—There are two important points in all facing. First, all end play of the lathe spindle must be taken up. Second, the carriage must be clamped upon the V's, thus preventing the tool from moving away from the work.

48. Tools Used and Their Shape.—Tools for radial facing do not need as great a clearance angle on the front; i. e., they do not require as much front rake as when turning cylindrical shapes. In shape the tools for radial facing are similar to planer or shaper tools, especially when they are used for facing from the outside toward the center. This point is taken up more fully under "Forms of Cutting Tools." Quite a large variety of tools can be used for radial facing, and in most cases a bent tool is preferable, because it can be held in the tool post closer to the cutting edge, thus giving greater stiffness. In Fig. 37 a front elevation of a tool presented to the work for radial facing is given, the front rake being shown by the line *G H*. The tool point *a* is placed about level with the center of the work. Fig. 38 gives a plan of the same tool illustrating how it should be set. The tool should make an angle of 30° to 45° with the face

FIG. 37.

of the work, and the cutting edge should be presented to the work as indicated by the line *E F*. The type of tool shown should be fed from the outside toward the center, the tool being set the same height as the center of the work. The tool may be fed either by hand or by means of a power feed.

For finishing radial surfaces, the side tool may be employed, or a special square-nosed tool may be used. The square-nosed tool has the advantage that it can be fed in either direction. If the feed and the cut are heavy, care must be taken that the tool does not spring into the work.

49. Cutting Speeds for Radial Facing.—In radial facing, the cutting speed of the tool will vary according to the diameter of the work at the point where the tool is operating, the number of revolutions per minute remaining the same; hence it is evident that, as the tool advances toward the center, the cutting speed will decrease. For this reason, on large surfaces, it may be advantageous to speed up the lathe as the tool advances toward the center.

FACING OF STATIONARY WORK.

50. Holding Stationary Work for Facing.—When the work to be operated upon is so large that it cannot be swung upon the face plate, it may be bolted to the carriage or lathe bed and faced by means of a rotating tool or cutter. The work must be blocked up to the proper position and then bolted securely, so that there will be no chance of its moving during the facing.

51. Facing Arms.—For facing the ends of cylinders as shown in Fig. 35, a facing arm is used, as shown in Fig. 39. This arm is fastened to the boring bar and rotates with it. On one side of the arm is fitted a tool block *a*, which slides in a guide. This tool block carries the cutting tool *b*. Feed-motion is given by means of a screw operated by the star wheel *c*, which is made to rotate partly for each revolution of the bar. In this way, the tool is fed entirely

across the face of the work. When a facing arm is not at hand, a cross-slide of some sort is fastened to the face plate of the lathe. Very often the compound rest is fastened to the face plate so that the slide may be used for feeding a tool across the face of the work.

52. Reason for Facing Before Boring.—When a piece of work held in a chuck or on a face plate is to be bored and faced, it is best to do the facing first, or at least take a roughing cut before doing the boring. This gives a better chance to start chucking tools and also furnishes a better edge for calipering the hole. When facing, the tool has a greater leverage on the work and, hence, a greater tendency to displace it. For this reason, all facing and outside turning should be done before boring.

FIG. 39.

SCREW CUTTING.

53. Definitions.—The **point** of a thread is the projecting end *a*, Fig. 40.

The **diameter** of a thread is the diameter measured over the points, or the diameter *d* of the bolt, Fig. 40, before the thread was cut. The diameter at the root of the thread is d_1.

The **root** of the thread is the bottom of the space *b* where the threads unite, Fig. 40.

The **height** of a thread is the vertical distance *h* from the root to the point, Fig. 40.

A **right-hand thread** is one that is turned in the direction of the hands of a clock when it is being screwed into a nut. It is the common thread.

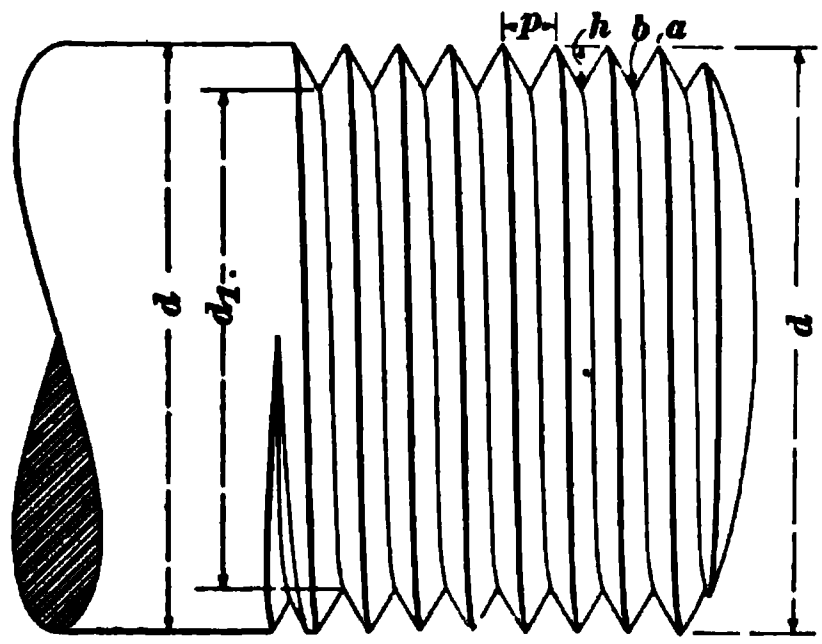

FIG. 40.

A **left-hand thread** turns in the opposite direction from a right-hand thread.

A **single thread** has one spiral groove cut around the bolt. This leaves one spiral projection or thread, Fig. 40.

A **double thread** has two spiral grooves cut around the bolt. This leaves two spiral projections or threads. Fig. 41 shows a double thread. One thread is cut farther along the bolt than the other, to show how the first thread is cut.

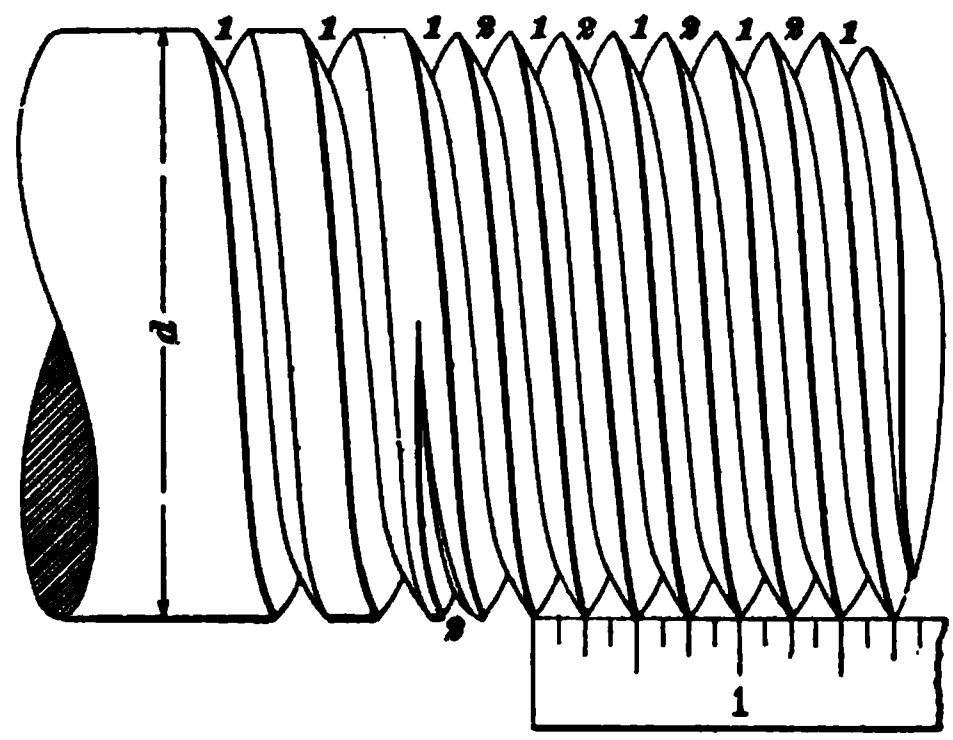

FIG. 41.

A **triple thread** has three spiral grooves and, consequently, three spiral projections or threads.

A single thread may be illustrated by winding a string around a lead pencil. The string will represent the thread of the screw. If two strings be wound at the same time about the pencil, keeping them side by side, the strings will represent a double thread. If three or four strings be used, a triple or a quadruple thread will be illustrated.

The **pitch of a thread** is the distance between any two turns of the thread, measured parallel to the axis; it is equal

to 1 divided by the number of turns the thread makes in advancing 1 inch.

54. Measuring Screw Threads.—It is customary to designate a screw thread by the number of turns it makes about the axis in advancing 1 inch along the axis. Fig. 42 shows a screw thread with a scale against it so that the first thread comes opposite the end of the scale and the fifth thread opposite the 1-inch mark. Lines drawn down from the end and from the inch mark would divide the first and fifth thread in the middle, leaving only four complete threads between these marks. There are, therefore, only 4 threads per inch on this screw and the pitch is $\frac{1}{4}$ inch. In counting the threads never include both the first and last threads.

FIG. 42.

In the case of a double-threaded screw, as shown in Fig. 41, every other thread is taken, making two threads per inch or $\frac{1}{2}$ inch pitch. In triple-threaded screws, as in Fig. 43, every third thread is counted.

Double and triple threads are used when a very coarse pitch screw of small diameter is desired. By cutting a number of threads in the place of one large thread, we can keep the coarse pitch without cutting very deep into the piece. Fig. 43 shows a section of a screw with triple threads. The dotted lines show the depth to which it would be necessary to cut a single thread of the same pitch.

FIG. 43.

SHAPES OF SCREW THREADS.

55. Common Forms of Threads.—There are four forms of screw threads in common use. They are the *sharp*, or **V**, *thread*, the *United States standard*, also known as the *Sellers*, or *Franklin Institute*, *thread*, the *British standard*, known also as the *Whitworth thread*, and the *square thread*. Besides these forms there are some other forms, such as the *ratchet thread*, the *acme thread*, and some others. These last named, however, are used only for special purposes.

The two forms that are most commonly used in the United States are the **V** thread and the United States standard. These are used on commercial bolts and screws and whenever fastening devices are required in machine construction.

56. Shape of V Thread.—Fig. 44 is a section through a part of a **V** thread, showing its exact shape. It will be seen that the sides of the thread are straight and make an angle of 60° with each other, and 60° with the center line of the screw. These side faces meet and form a sharp point a and a sharp corner b at the root; hence its name, **sharp, or V, thread.**

FIG. 44.

The pitch is here denoted by p, the height of the thread by h, the diameter of the bolt by d, the diameter at the root of the thread, i. e., the diameter of the tap drill, by d_1. On account of the fact that the sides of the thread make equal angles with each other and with the center line of the bolt, this angle being 60°, the height of the thread divided by the pitch equals .866; that is, $\frac{h}{p} = .866$, or $h = .866p$. Also the diameter of the bolt at the root of the thread, that is, the diameter of the tap drill, is expressed by the following formula: $d_1 = d - 2h = d - 1.732p$. Expressed as a rule this would read as follows:

Rule.—*To find the diameter of the tap drill when the diameter of the bolt and the pitch are given, multiply the pitch by 1.732 and subtract the result from the diameter of the bolt.*

EXAMPLE.—Required to find the diameter of tap drill for a 1-inch standard bolt that has 8 threads per inch, or a pitch of $\frac{1}{8}$ in.

SOLUTION.—Applying the above rule gives $1.732 \times \frac{1}{8} = .2165$. Subtracting this from the outside diameter of the bolt gives $1 - .2165 = .7835$ in. as the diameter of the bottom of the thread or the diameter of the tap drill. Ans.

EXAMPLES FOR PRACTICE.

1. A bolt is $\frac{3}{4}$ inch in diameter and has a pitch of $\frac{1}{10}$ inch. What diameter of tap drill is required? Ans. .5768 in.

2. What diameter of tap drill is necessary for a bolt $\frac{5}{16}$ inch in diameter, with a pitch of $\frac{1}{18}$ inch? Ans. .2163 in.

56₁. As the pitch equals 1 divided by the number of threads, the rule can be expressed more simply by letting n equal the number of threads, when the formula can be written $d_1 = d - \frac{1.732}{n}$. Expressed as a rule this formula becomes

Rule.—*To find the diameter of the bottom of the thread, that is, the diameter of the tap drill when the diameter of the bolt and the number of threads per inch are given, divide 1.732 by the number of threads per inch and subtract the quotient from the outside diameter of the bolt.*

EXAMPLE.—It is desired to find the diameter of the tap drill for a 1-inch standard bolt having 8 threads per inch.

SOLUTION.—Applying the rule, we get $\frac{1.732}{8} = .2165$. Subtracting this from the outside diameter of bolt gives $1 - .2165 = .7835$ in. as the diameter at the bottom of the thread or the diameter of the tap drill. Ans.

EXAMPLES FOR PRACTICE.

1. A bolt is $1\frac{1}{8}$ inches in diameter and has 11 threads per inch. What diameter of tap drill is required? Ans. 1.4676 in.

2. What diameter of tap drill must be used to drill a nut for a $\frac{7}{16}$ inch standard bolt having 14 threads per inch? Ans. .3138 in.

---

57. Shape of United States Standard Thread.—A section through a United States standard thread is shown in Fig. 45. The shape is similar to the sharp, or V, thread in that the sides are straight and form an angle of 60° with one another and with the center line of the bolt. The point and the root of the thread, however, are flat. The amount of flatness is determined by dividing the total height of a sharp, or a V, thread into 8 parts. One-eighth of the total height is cut from the point and an equal amount filled in at the root, thus making the total height of the United States standard three-fourths that of a V thread of the same pitch. The letters in Fig. 45 are similar to those in the previous illustrations and have the following values: d equals the diameter of the screw, d_1 the diameter at the root of the thread, that is, of the diameter of the tap drill, p the pitch, h the height of the thread and the number of threads per inch.

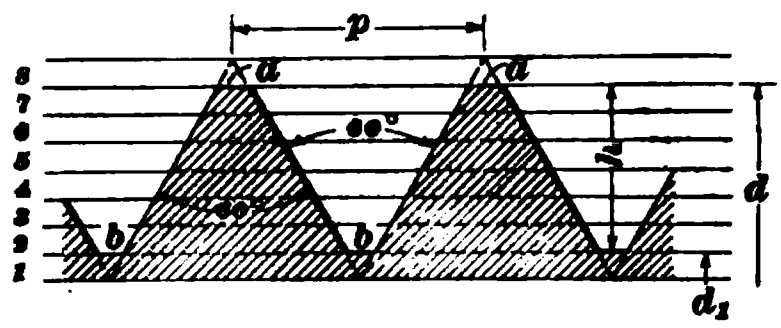

FIG. 45.

For the United States standard thread, the following formulas may be used, the letters in which have the same meaning as in Arts. **56** and **56₁**:

$$h = .866 \times p \times \tfrac{3}{4} = .6495\,p.$$
$$d_1 = d - 2h = d - 1.299\,p.$$

Expressed as a rule this becomes

Rule.—*To find the diameter at the bottom of a United States standard thread when the outside diameter and the pitch are given, multiply the pitch by 1.299 and subtract the product from the outside diameter of the bolt.*

EXAMPLE.—It is desired to find the diameter of the tap drill for a 1-inch bolt for United States standard thread, the 1-inch bolt having 8 threads per inch.

SOLUTION.—Since there are 8 threads per inch, the pitch is $\frac{1}{8}$ in.; hence, applying the foregoing rule, $\frac{1}{8} \times 1.299 = .1624$. Subtracting this from 1 in. gives .8376 in. as the diameter of the tap drill. Ans.

EXAMPLES FOR PRACTICE.

1. A bolt with United States standard thread is $1\frac{1}{8}$ inches in diameter. What is the diameter at the bottom of the thread, the pitch being $\frac{1}{7}$ inch? Ans. .94 in.

2. What is the diameter at the bottom of the thread of a bolt 4 inches in diameter having a United States standard thread? The pitch is $\frac{1}{8}$ inch. Ans. 3.567 in.

---

57. When the number of threads per inch, in place of the pitch, is given, the following formula may be employed:

$$d_1 = d - \frac{1.299}{n}.$$

Expressed as a rule this becomes

Rule.—*To find the diameter at the bottom of the thread or the diameter of the tap drill for United States standard thread when the diameter of bolt and number of threads per inch are given, divide 1.299 by the number of threads per inch and subtract the quotient from the diameter of the bolt.*

EXAMPLE.—It is desired to find the diameter at the bottom of the thread or of the tap drill for a 1-inch standard bolt that has 8 threads per inch.

SOLUTION.—Applying the rule, $\frac{1.299}{8} = .1624$; subtracting this from the diameter of the bolt gives $1 - .1624 = .8376$ in. Ans.

EXAMPLES FOR PRACTICE.

1. What is the diameter at the bottom of the thread of a United States standard bolt $\frac{7}{8}$ inch in diameter, with 9 threads per inch? Ans. .731 in.

2. What is the diameter of the tap drill necessary to cut a thread for a 3-inch United States standard bolt, with $3\frac{1}{2}$ threads per inch? Ans. 2.629 in.

58. Shape of British Standard Thread. — The exact shape of the British standard is shown in Fig. 46. In this thread the sides are straight and form an angle of 55° with one another. The point and root are rounded. The total height of a sharp thread is divided into six equal parts. One part is taken from the point and one part filled in at the root. The thread is further shaped by rounding the bottom, or root, and top with curves that just come tangent to the sides.

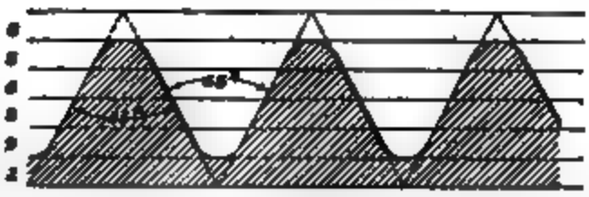

FIG. 46.

59. Shape of Square Thread.—The square thread, as its name implies, is square in section, as shown in Fig. 47. The space between the threads is also square, so that in theory the dimensions *a*, *b*, and *c* should all be equal. In practice, *a* is made slightly greater than *b*. In the square thread there is no standard relation between the diameter of the screw and the pitch; in fact, there is no standard pitch.

FIG. 47.

STANDARD THREADS.

UNITED STATES STANDARD THREAD.

60. Origin of a Standard Thread.—Originally, each manufacturer adopted his own standard as to the number of threads per inch and the form of thread. The result was that bolts and screws made by different firms were not interchangeable, and, in the case of a breakdown, it was often very inconvenient to obtain repairs for machines. As manufacturing interests became specialized and shops exchanged tools and commodities, interchangeability of the parts became very desirable, and a number of leading

manufacturers brought out special types of threads that they tried to have adopted.

In the year 1864, The Franklin Institute, of Philadelphia, appointed a committee to investigate and report upon this subject of screw threads. They made a careful investigation, and finally recommended a system designed by Mr. William Sellers, which was later adopted by the Institute.

61. Reason for Selecting Present Standard.—In determining the exact shape and pitch for a screw, many things had to be considered. Among these were the best angle for the sides, and whether the angle of the sides should be equal or not. When a bolt has a thread cut on its end, the strength of that bolt is reduced because of the reduced diameter at the root of the thread. It will not be any stronger than a bolt equal to the diameter at the root of the threads. It would therefore seem desirable to make the threads shallow, so as not to reduce the strength of the bolt. The threads then might be of the shape shown in Fig. 48. Suppose we have this form of thread on a bolt that passes through the pieces shown, and it is intended to carry a load acting in the direction of the arrow. A nut shown in section holds the bolt in place. As the load is applied, the bolt will tend to draw through the nut, and, by so doing, will tend to stretch or burst it. The bursting strain on the nut will depend on the angle of the side of the threads, each thread acting like a wedge in the nut. It will be seen that the bursting strain in this case will be much greater for a given load than it would be if the threads were more acute, as shown in Fig. 49 (*a*).

FIG. 48.

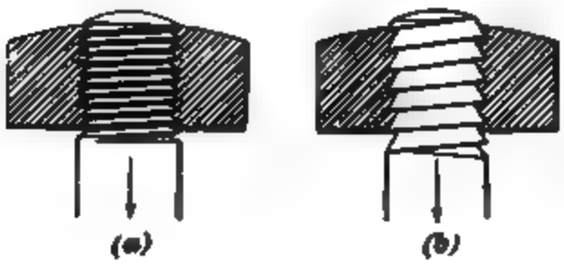

FIG. 49.

Besides, the great bursting strain would cause great friction on the thread, and there would be danger, in tightening the nut, that the bolt would be twisted off. It is evident, therefore, that a thread having a flat angle is not desirable. The sharp acute thread would so weaken the bolt that it is not desirable. The friction and the bursting strain on the nut might be eliminated by using a ratchet thread, as shown in Fig. 49 (*b*). This would be flat on the under side, relieving the nut from the wedge-shaped thread tending to burst the nut. The thread would not be deep, so that the bolt would not be much reduced in strength after the thread was cut. This would at first seem to answer the conditions, but if the direction of the load should be changed, these ideal conditions would vanish. In every case, the workman would have to consider the direction of the load before he could determine which side of the thread should be flat and which side beveled. Furthermore, the nut used for this thread would only fit from one side; if the nut were turned over, it would not go on. This and many other considerations led to the adoption of a thread with equal angles on either side. The angle of 60° was chosen after much consideration, it being an angle easily obtained and one that seems best to answer the conditions. To give the thread durability, it was decided to take off the sharp point, since it did not add to the strength of the thread. By removing the point of the thread in the nut, it made it possible to fill in a corresponding amount in the root of the screw. This added to the strength of the bolt. The points were left flat because of the ease with which the screw could be constructed when compared with the curved points represented by the British standard.

62. United States Standard Threads.—The pitch of the screw for different diameters was also considered, and a standard number of threads to the inch for various diameters was adopted.

The number of threads per inch for the United States standard is given in the following table:

UNITED STATES STANDARD THREADS.

Diam. of Screw. Inches.	Diam. at Root of Thread. Inches.	No. of Threads Per Inch.	Diam. of Screw. Inches.	Diam. at Root of Thread. Inches.	No. of Threads Per Inch.
$\frac{1}{4}$	.185	20	2	1.712	$4\frac{1}{2}$
$\frac{5}{16}$	.240	18	$2\frac{1}{4}$	1.962	$4\frac{1}{2}$
$\frac{3}{8}$	.294	16	$2\frac{1}{2}$	2.175	4
$\frac{7}{16}$	.344	14	$2\frac{3}{4}$	2.425	4
$\frac{1}{2}$	.400	13	3	2.629	$3\frac{1}{2}$
$\frac{9}{16}$	.454	12	$3\frac{1}{4}$	2.879	$3\frac{1}{2}$
$\frac{5}{8}$	.507	11	$3\frac{1}{2}$	3.100	$3\frac{1}{4}$
$\frac{3}{4}$	.620	10	$3\frac{3}{4}$	3.317	3
$\frac{7}{8}$	.731	9	4	3.567	3
1	.837	8	$4\frac{1}{4}$	3.798	$2\frac{7}{8}$
$1\frac{1}{8}$	.940	7	$4\frac{1}{2}$	4.028	$2\frac{3}{4}$
$1\frac{1}{4}$	1.065	7	$4\frac{3}{4}$	4.255	$2\frac{5}{8}$
$1\frac{3}{8}$	1.160	6	5	4.480	$2\frac{1}{2}$
$1\frac{1}{2}$	1.284	6	$5\frac{1}{4}$	4.730	$2\frac{1}{2}$
$1\frac{5}{8}$	1.389	$5\frac{1}{2}$	$5\frac{1}{2}$	4.953	$2\frac{3}{8}$
$1\frac{3}{4}$	1.490	5	$5\frac{3}{4}$	5.203	$2\frac{3}{8}$
$1\frac{7}{8}$	1.615	5	6	5.423	$2\frac{1}{4}$

63. Formal Adoption of United States Standard Threads.—This system was authorized for the naval service by the Government in the year 1868. In the year 1871, the Master Car Builders' Association recommended it for use in the construction of locomotives and cars. The system is now entirely used in the United States Navy, and very generally used in locomotive and car construction. It has been adopted by manufacturers generally. It has not entirely taken the place of the V-thread system, however, since for very small screws and fine pitches the V thread is in many instances more desirable.

64. Variations in Diameter of Standard Bolts. It will be noticed that the United States standard diameters

of bolts vary by sixteenths, eighths, and fourths of an inch. Until recently, many makers used the same number of threads per inch, but made the diameter of the bolt $\frac{1}{64}$ or $\frac{1}{32}$ inch under or over the standard diameter; thus, a $\frac{3}{4}$-inch bolt might be $\frac{1}{64}$ inch over or under $\frac{3}{4}$ inch in diameter. Taps and dies made according to this system are still in use in many blacksmith shops. Fortunately, the confusion arising from this cause is rapidly being done away with, and manufacturers generally are adopting the single standard system and making all their bolts of exactly the nominal diameter. The United States standard thread is used on commercial capscrews.

SHARP, OR V, THREADS.

65. This form of thread has been almost universally adopted for the making of case-hardened setscrews. The number of threads per inch adopted by universal consent is slightly different from that employed in the United States standard, and is given in the following table:

Diameter of Tap. Inches.	$\frac{1}{4}$	$\frac{5}{16}$	$\frac{3}{8}$	$\frac{7}{16}$	$\frac{1}{2}$	$\frac{5}{8}$	$\frac{3}{4}$	$\frac{7}{8}$	1	$1\frac{1}{8}$	$1\frac{1}{4}$	$1\frac{3}{8}$	$1\frac{1}{2}$	$1\frac{5}{8}$	$1\frac{3}{4}$	$1\frac{7}{8}$	2
Number of Threads Per Inch.	20	18	16	14	12	11	10	9	8	7	7	6	6	5	5	$4\frac{1}{2}$	$4\frac{1}{2}$

BRITISH STANDARD.

66. Origin of the System.—In the year 1861, Sir Joseph Whitworth, of England, proposed a system of standards for screw threads to overcome the evils that were arising in England by the use of a great number of individual systems, each individual builder or manufacturer having had his own standard up to that time. The system that he introduced is now the standard thread used by British manufacturers, and the same form has been adopted

very largely throughout Europe. The rounding of the top and bottom of the thread has certain very desirable features, since it adds greatly to the strength and durability of the screw and does away with the sharp corners, which are more liable to be nicked or bruised.

Most American manufacturers that are accustomed to the United States standard consider the difficulty of keeping up to standard the necessary tools for producing these curved points and roots a sufficient argument against the adoption of the British standard screw thread in this country.

CUTTING SCREW THREADS.

67. Methods of Cutting Threads in Use.—Screw threads may be cut on bolts or screws by either one of two methods. *First*, a die may be used that cuts the thread to size at one passage over the work. *Second*, the work may be revolved between the centers of a lathe and a single-pointed tool held in the tool post passed along the course of the thread a number of times, so as to remove the metal a little at a time.

68. Definitions.—When a screw is cut upon the outside of a piece of work, it is called an **external,** or a **male, thread.** When a thread is cut on the inside of a nut or collar, it is called an **internal,** or a **female, thread.**

CUTTING THREADS BY HAND.

69. General Consideration. — When accuracy of pitch is desired, or the screws are long, the thread should be cut in a lathe between the centers, but if a limited number of short threads is required, these can be advantageously cut by hand with dies; while if a large number is required, they can be produced by means of a special bolt-cutting machine.

70. Hand Dies.—Fig. 50 shows a die for cutting threads, which is intended to be operated by hand. It is held in a die holder, as shown in Fig. 51. When these hand dies are used, the rod to be threaded is held in a vise. The die is then screwed down on the end of the rod until the desired length of screw has been cut. Some pressure will be necessary to start the die, but, after a few threads are cut, it will feed itself along as it is revolved. The die shown in Fig. 50 is adjustable within certain limits. Fig. 52 shows it with one half removed. Parts *a* and *b* compose the die proper. Part *c* is a guide that slips on the end of the work

Fig. 50.

Fig. 51.

and holds the die true when starting the thread. Adjustment is made by the tapered-head screw *d*. When this is screwed into the lower guide, it forces the halves of the die

Fig. 52.

apart slightly, which will cause them to cut a larger thread. When in use, the two halves of the die are kept from springing apart by being held in the die holder.

71. Inaccuracy of Pitch of Thread.—This method is slow, as it requires nearly as much time to remove the

dies from the work as it does to cut the thread. Hand-cut threads can never be depended on to be true with the axis of the work, as the guide does not fit with sufficient accuracy to start the dies perfectly true. Worst of all is the inaccuracy of pitch. It is not uncommon to find dies that would cut a thread which, if continued for a foot in length, would be in error $\frac{1}{8}$ inch. With care, dies can be made that will cut short threads with sufficient accuracy of pitch for commercial purposes.

BOLT CUTTERS.

72. General Description of Bolt Cutter.—For rapid screw cutting, special machines are used. These

FIG. 53.

machines, called **bolt cutters,** rotate the dies while the work is held in a chuck on the machine. Fig. 53 shows a type of bolt cutter called a **double-head machine,** since

it carries two heads or die holders. Work is clamped horizontally in the machine in the jaws or chucks *d*, *d* by means of the large hand pilot wheels *a*, *a*. The chuck and work are moved up to the dies *c*, *c* by means of hand wheels *b*, *b*, these wheels operating the gears, which engage with the racks shown.

73. Automatic Dies.—The dies used on bolt-cutting machines are quite different from the hand dies just described. They are automatic in action, so that when the die has cut a sufficient length of thread on the bolt, a lever automatically opens the die, causing it to cease cutting and allowing the work to be freely withdrawn. This saves much time. Fig. 54 shows one style of special head for bolt cutters

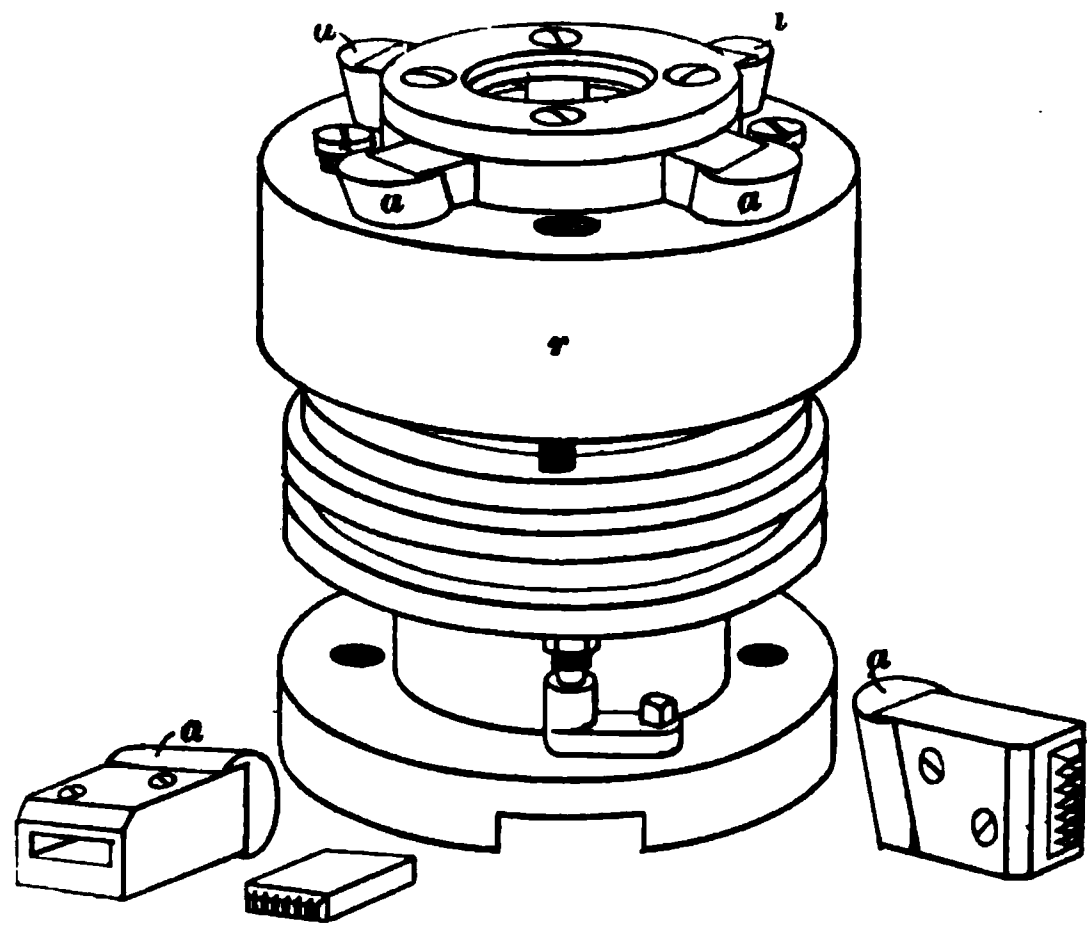

FIG. 54.

designed to hold detachable dies. Dies of various sizes may be used in this head for cutting different diameters of bolts. Fig. 55 shows the principle of this style of automatic head. The body of the head *b* has four radial grooves cut in the end, in which the four cutter dies *d* can slide. A cap *c*, fastened to the head *b* with screws, holds the dies in place. The outer ends of the dies are beveled, as shown. The ring *r* fits over the head *b* and partly over the ends of

the dies. When in the position shown in the illustration, the dies are open. To close the dies, the ring *r* is pushed in the direction of the arrow, over the ends of the dies to the position of the dotted lines. This forces each of the dies toward the center. When in this position, the dies are

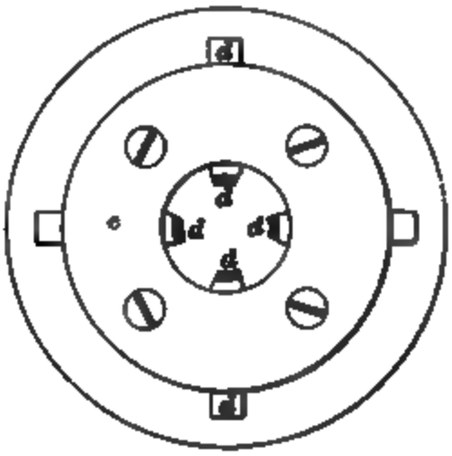

FIG. 55.

ready to cut. Levers are so arranged that after a thread of the desired length is cut on a bolt, the ring *r* is suddenly released and moved back to its normal position, as shown. This releases the dies, which are as quickly opened by the cylindrical portions *a*, Fig. 54, sliding in the ring *r*, and the dies cease to cut.

74. Lubrication.—When these machines are being used, a stream of lard oil is kept flowing on the dies and the work, to keep them cool and to lubricate the cutting edges.

TAPPING.

75. Use of Taps.—The operation of cutting internal threads is in many respects similar to that of cutting external threads. It may be done on the engine lathe, as will be described later, or by the use of *taps*, which may be operated either by hand or machine power. The use of taps for cutting internal threads is the common practice, and only when large or special forms of threads are desired is the lathe employed

76. Hand Taps.—Taps are generally made from the solid bar of steel. They are accurately threaded and fluted,

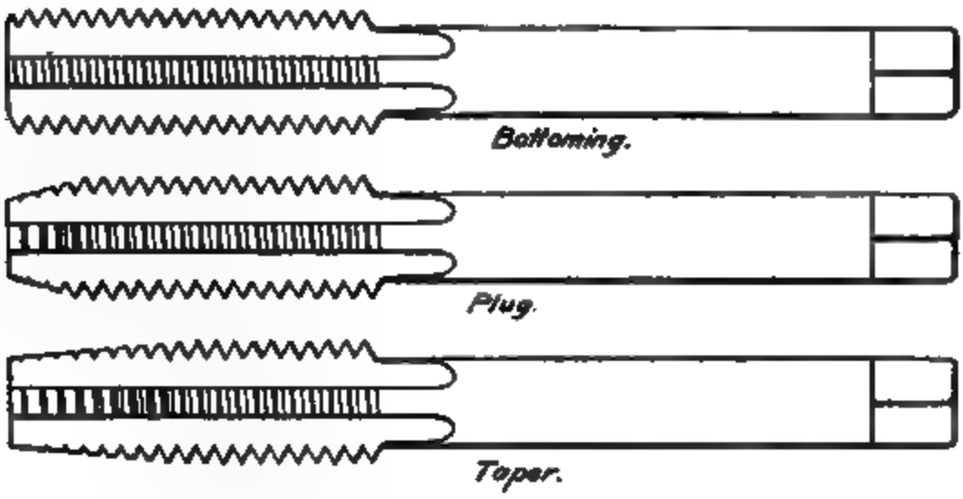

FIG. 56.

and then tempered. Fig. 56 shows a set of machinists' hand taps. A set consists of a taper, a plug, and a bottoming tap.

77. Tapping a Hole.—When a hole has been drilled entirely through a piece, it is only necessary to use the taper tap, which may be run entirely through the piece being tapped. When a hole that has been drilled partly through a piece is to be threaded to the bottom, as shown in Fig. 57, it is necessary to use all three taps. In order to start the thread, it is necessary to use the taper tap. This is screwed in until it touches the bottom of the hole. The plug tap is next used, which, when screwed to the bottom of the hole, will cut "full" threads somewhat deeper, and, for finishing, the bottoming tap is used.

FIG. 57.

78. Machine Tapping.—For machine tapping, the taper tap is used, the principal difference being that it has a longer shank than the hand taper tap. The machines used are similar to those used for bolt cutting. The die head is removed and the taps are held in suitable chucks in the place of the die heads.

CUTTING SCREWS ON THE LATHE.

79. Accuracy of Pitch.—When screws of accurate pitch or lead are desired, or when screws are desired that will be true with the axis of the work, they can be cut with more certainty on the lathe than with dies. The accuracy of the screw cut will depend on the accuracy of the leadscrew in the lathe used. For ordinary threads, the ordinary leadscrew is sufficiently accurate. When greater accuracy is required for such work as making taps or dies, the making of precision screws for measuring instruments, or similar work, a leadscrew that has been made with more than ordinary care and has been tested all along its length must be used.

CALCULATING CHANGE GEARS.

80. The Function of the Leadscrew and Change Gears.—When cutting screw threads the carriage is moved by the leadscrew. The leadscrew is caused to revolve, and as it works in a nut attached to the carriage, the carriage is moved toward or away from the headstock, according to the direction in which the leadscrew turns. This nut is split in halves, and when it is not desired to move the carriage by the leadscrew, a movement of a lever opens the two halves of the nut so that they do not engage with the leadscrew.

It is at once apparent that for every revolution of the leadscrew the carriage moves a distance equal to the pitch. For example, if a leadscrew has 5 threads per inch, its pitch is $\frac{1}{5}$ inch, and for every revolution of the leadscrew the carriage moves $\frac{1}{5}$ inch. If, now, the lathe spindle and with it the work on which the thread is to be cut turns exactly once while the leadscrew turns once, the thread tool will advance $\frac{1}{5}$ inch, and the thread thus cut will have a pitch of $\frac{1}{5}$ inch, or the number of threads per inch cut will be the same as the number of threads per inch on the leadscrew, in this case 5. If, further, the spindle turns, say, twice as fast as the leadscrew does, the work will make two turns while the tool advances $\frac{1}{5}$ inch. In other words, the resulting

thread will have twice as many turns in a given distance, say, 1 inch, as the leadscrew has. In the present case, if the leadscrew has 5 threads per inch, the resulting screw will have 10 threads per inch. If the spindle turns one-half as fast as the leadscrew, the leadscrew will make two turns while the work makes one turn. The result of this is that the distance between any two threads on the work will be just twice that on the leadscrew. In other words, the resulting pitch will be $\frac{2}{5}$ inch, and the number of threads per inch will be $2\frac{1}{2}$.

81. In screw cutting the chief object to be attained is to make the leadscrew turn slower or faster than the spindle,

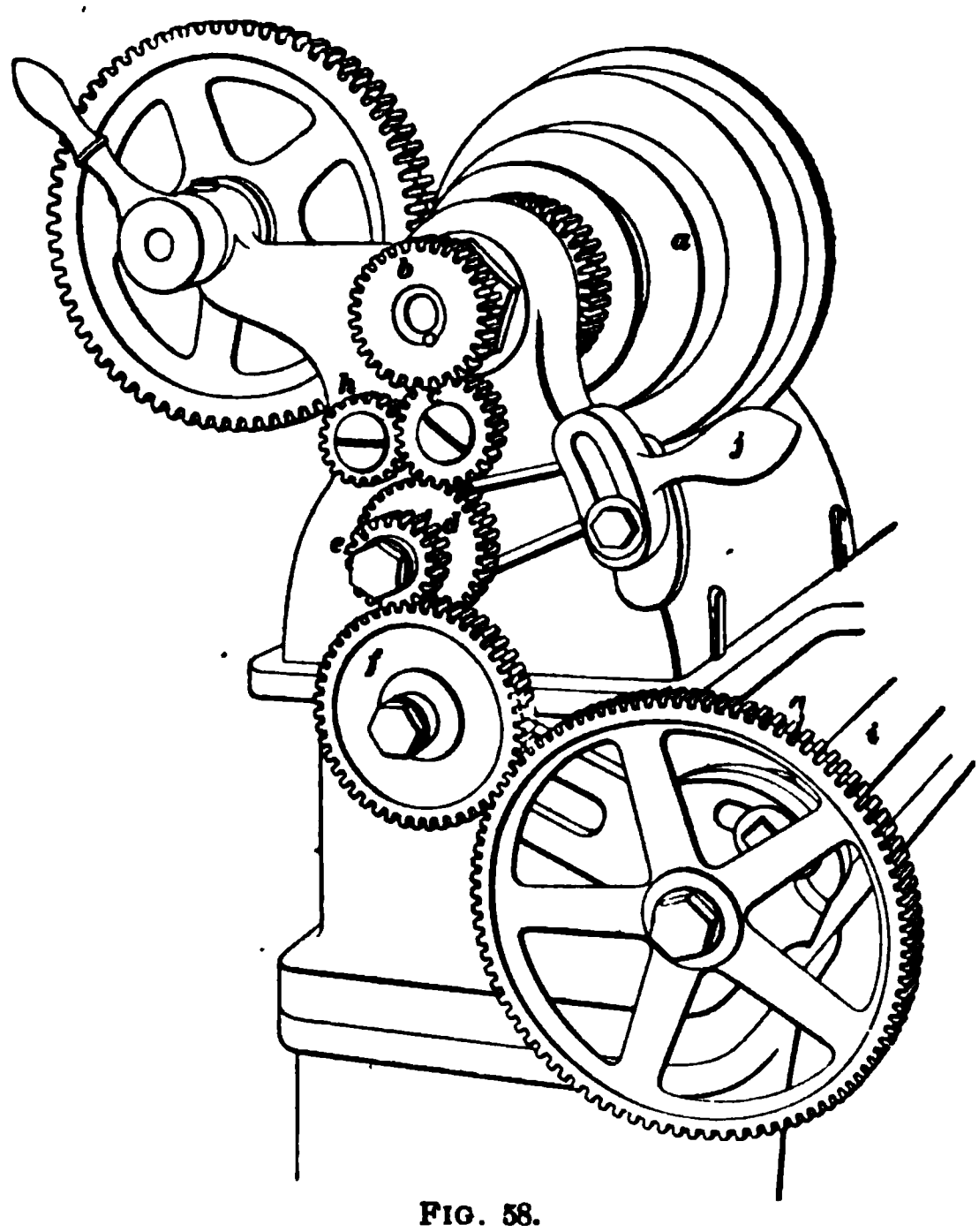

FIG. 58.

according to whether the screw to be cut has a greater or less number of threads per inch than the leadscrew. This result, accomplished by changing the gears on the back end

of the lathe, will be understood more clearly by referring to Fig. 58, which shows the arrangement of the gearing. On small work the back gears are thrown out and the cone pulley *a* turns the spindle and with it the gear *b*, which is keyed to the rear end. Gear *b* engages with the idler *c*, which in turn engages with gear *d*. Gears *d* and *e* are keyed to a hollow sleeve on the stud and revolve together. Gear *e* turns the idler *f*, which transmits the motion to gear *g* on the end of the leadscrew *i*. It will be noticed that gears *b*, *d*, and *g* turn in the same direction, and that gears *c* and *f* turn in the opposite direction. Gears *c*, *d*, and *h* are a part of the mechanism used for reversing the direction in which the leadscrew turns. As geared now, the lathe will cut a right-hand thread. If, however, the handle *j* were pushed down, gear *h* would engage with gear *b* and gears *c* and *g* would turn in the opposite direction to that shown in the cut, and a left-hand thread would be cut. Gears *b* and *d* have the same number of teeth. Hence the only gears affecting the revolutions of the leadscrew with respect to the spindle are gears *e* and *g*. Either or both of these gears can be changed, and if changed, they will affect the motion of the leadscrew; hence, they are called **change gears.**

Suppose that the cone *a*, and with it the lathe spindle and gear *b*, makes one revolution. Gear *d* being the same size as gear *b* will also make one revolution, and as gear *e* is keyed to the same stud as *d*, it will likewise make one revolution. If gear *g* were the same size as gear *e*, gear *g* would also make one revolution, and the number of threads cut per inch would then be equal to the number of threads per inch in the leadscrew. If, however, gear *g* contains more teeth than gear *e*, the leadscrew will not make a complete revolution when the spindle makes a complete revolution; and if gear *g* is smaller than gear *e*, the leadscrew *i* will make more than one complete revolution when the spindle makes one complete revolution.

82. Selecting the Change Gears for a Simple-Geared Lathe.—Many lathes have on the front side of the headstock a brass **index plate,** on which is stated what

gears are to be used in order to cut any particular number of threads per inch. On some lathes this index plate is omitted, and it may happen, also, that it is necessary to cut a thread which is not given on the index plate. In this case it becomes necessary to make a calculation in order to ascertain whether or not the thread can be cut with the change gears in stock. Probably the easiest method of performing this calculation is the following:

Suppose the leadscrew has 6 threads per inch and it is desired to cut a screw having 16 threads per inch. Form a fraction whose numerator shall be the number of threads per inch in the leadscrew and whose denominator shall be the number of threads per inch to be cut, in this case $\frac{6}{16}$. Reduce this fraction to its lowest terms, obtaining $\frac{3}{8}$. Now multiply both terms of this fraction by the same number until a new fraction is obtained whose numerator and denominator shall be numbers corresponding to the number of teeth in two gears in stock. In the present case, multiplying both terms of the fraction $\frac{3}{8}$ by 8 we obtain $\frac{3 \times 8}{8 \times 8} = \frac{24}{64}$. If we have gears in stock having 24 and 64 teeth, we can place the 24-tooth gear on the stud and the 64-tooth gear on the leadscrew. In many cases there will be several selections that can be made, while in other cases only one set of gears will cut the desired thread.

83. The work of selecting the gears may be shortened in the following manner: After reducing the fraction to its lowest terms, refer to the list giving the number of teeth in each of the gears in stock. Ascertain which of the numbers are divisible by either the numerator or denominator of the fraction without a remainder. Suppose in the preceding case it was found that among the gears in stock was one having 24 teeth, another having 27 teeth, another having 36 teeth, and so on. Now dividing 24 by the numerator 3 the result is 8. Multiplying both terms of the fraction by 8

the result, as previously shown, is $\frac{24}{64}$. If we have a gear with 64 teeth, it can be placed on the leadscrew and the 24-tooth gear can be placed on the stud.

84. Any lathe having its gears so arranged that when the lathe is running there is but one change of speed between the stud and leadscrew is called a **simple-geared lathe.** In explanation of this definition, refer again to Fig. 58. It will be seen that when the lathe is running, gear *e* makes a certain number of revolutions in a certain time, say, 1 minute, while gear *g* revolves a greater or less number of times in 1 minute according to whether it is smaller or larger than gear *e*. It makes no difference how many gears there are between *e* and *g*, as the speed of gear *g* is not affected. In fact, in the figure shown, so far as the speed of gear *g* is concerned, gear *f* could be removed entirely and gear *g* could mesh directly with gear *e*. In some simple-geared lathes, however, to avoid the use of large gears, the fixed gear on the stud is sometimes larger than the gear on the spindle. In other words, referring to Fig. 58, gear *d* is sometimes larger than gear *b*. In such cases gear *b* is usually placed inside the bearing and gear *d* is partly or wholly concealed in the headstock. As a rule, in all such instances, gear *d* has either twice or three times as many teeth as gear *b*.

85. Therefore, the first step in calculating the change gears is to ascertain whether or not gear *d* has the same number of teeth as gear *b*. Should it be found that gear *d* is larger than gear *b*, multiply the number of threads per inch in the leadscrew by the number of teeth in gear *d* and divide the product by the number of teeth in gear *b*. Use this number in all cases as the numerator of the fraction whose denominator is the number of threads per inch to be cut. For example, assuming that the leadscrew has 6 threads per inch, that gear *b* on the spindle contains 24 teeth, and gear *d* contains 48 teeth, multiply 6 by 48 and divide by 24, obtaining $\frac{48 \times 6}{24} = 12$. In all cases of calculating the

change gears for a lathe of this kind, 12 would be used for the numerator instead of 6. For example, if in the case just mentioned it is desired to cut 13 threads per inch, the fraction will be $\frac{12}{13}$. Now referring to the set of gears, we endeavor to find one whose number of teeth is a number divisible by 13. Suppose we find one having 52 teeth. Dividing 52 by 13, the result is 4, and multiplying both terms of the fraction by 4 we obtain $\frac{12 \times 4}{13 \times 4} = \frac{48}{52}$. Hence, if there is a 48-tooth gear in the set, it can be placed on the stud and the 52-tooth gear can be placed on the leadscrew.

Rule.—I. *For a simple geared lathe, form a fraction whose numerator is the number of threads per inch in the leadscrew and whose denominator is the number of threads per inch to be cut, and reduce this fraction to its lowest terms.*

II. *But if there is a fixed gear on the stud that differs in size from the gear on the spindle, multiply the number of threads per inch in the leadscrew by the number of teeth in the fixed gear on the stud and divide the product by the number of teeth in the gear on the spindle; use this result as the numerator instead of the number of threads per inch in the leadscrew.*

III. *Find from the list of change gears one, the number of whose teeth is exactly divisible by either the numerator or denominator of the fraction last found, and find how many times the number representing the number of teeth in the gear selected contains the numerator or denominator of the fraction. Multiply both terms of the fraction by this quotient and the numerator of the fraction will represent the number of teeth in the change gear on the stud, and the denominator the number of teeth in the gear on the leadscrew. If it should so happen that there are no two gears having the number of teeth found in this manner, repeat the process until two gears are found having the same number of teeth as are represented by the numbers composing the numerator and denominator. The gear, the number of whose teeth corresponds to the*

numerator, should be placed on the stud and the other gear on the leadscrew.

EXAMPLE.—Suppose the gear on the spindle has 24 teeth and the fixed gear on the stud has 60 teeth. If the leadscrew has 4 threads per inch, what change gears must be used in order to cut a screw having 13 threads per inch?

SOLUTION.—As the fixed gear on the stud differs in size from the gear on the spindle, we proceed as in II of the rule just given, obtaining

$$\frac{\overset{10}{\cancel{60}} \times \cancel{4}}{\underset{\cancel{6}}{\cancel{24}}} = 10.$$

We therefore use 10 for the numerator of our fraction, and the number of threads per inch to be cut, or 13 in this case, for the denominator, obtaining $\frac{10}{13}$. Now there must be a gear in stock whose number of teeth is exactly divisible by 13. In other words, there must be a gear in stock the number of whose teeth equals $2 \times 13 = 26$, $3 \times 13 = 39$, $4 \times 13 = 52$, or 13 multiplied by some other small number. Suppose, on investigation, that a gear is found having 52 teeth. As 13 is contained four times in 52, multiply both terms of the fraction $\frac{10}{13}$ by 4, obtaining $\frac{10 \times 4}{13 \times 4} = \frac{40}{52}$. If now there is a gear in stock having 40 teeth it can be placed on the stud and the 52-tooth gear can be placed on the leadscrew. Ans.

86. Cutting Fractional Threads.—When the number of threads per inch to be cut contains a fraction, as for example $11\frac{1}{2}$, $7\frac{1}{2}$, $2\frac{3}{4}$, etc., the rule just given will still apply. The fraction will be formed in the usual manner. Being a compound fraction instead of a simple one, reduce the compound fraction to a simple fraction by multiplying both numerator and denominator of the compound fraction by the denominator of the fraction in the denominator of the compound fraction.

EXAMPLE.—Referring to Fig. 58, in which the fixed gear on the stud is the same size as the gear on the spindle, calculate the change gears necessary to cut a screw having $2\frac{3}{4}$ threads per inch. Assume that the leadscrew has 8 threads per inch.

SOLUTION.—Writing 8 for the numerator and $2\frac{3}{4}$ for the denominator, we obtain the compound fraction $\frac{8}{2\frac{3}{4}}$. The denominator of the

fraction in the denominator of this compound fraction is 4. Multiplying both terms of the compound fraction by 4 we obtain

$$\frac{8 \times 4}{2\frac{3}{4} \times 4} = \frac{32}{11}.$$

Now in order to cut this thread, there must be a gear in stock the number of whose teeth is exactly divisible by 11. Assume that we have a gear with 33 teeth in it, $33 \div 11 = 3$. Multiplying both terms of this fraction $\frac{32}{11}$ by 3 we obtain $\frac{32 \times 3}{11 \times 3} = \frac{96}{33}$. Hence, the gear on the stud should have 96 teeth and the gear on the leadscrew 33 teeth. Ans.

87. Cutting Threads With a Compound-Geared Lathe.—While a simple-geared lathe has a considerable range in respect to the number of different threads that

FIG. 59.

can be cut, it is usually limited when cutting threads of a comparatively large or a comparatively small pitch. When it is desired to cut a thread having a particularly coarse pitch,

as for instance one having a pitch of 1 inch or more, it is necessary to use compound gearing, both because otherwise an extra large number of change gears would be required in the set, and because the change gears themselves would have to be very large. The same remarks apply to gears having a particularly fine pitch, as for instance a pitch of $\frac{1}{32}$ inch or less. The gearing arrangement in a compound-geared lathe is shown in Fig. 59. This is the same lathe as was shown in Fig. 58, but has a different arrangement of gears. Usually a simple-geared lathe cannot be converted into a compound-geared one. As in Fig. 58, *a* is the cone pulley, *b* the gear on the end of the spindle, *c*, *h*, and *d* are gears attached to the reversing mechanism, *e* is the change gear on the stud, and *g* the change gear on the leadscrew. Instead of connecting *e* and *g* by an idler gear *f*, as in Fig. 58, *e* meshes with *k*, Fig. 59, and revolving on the same shaft with *k* and keyed to a hollow sleeve, free to turn on the shaft is gear *f*, which meshes with gear *g* on the leadscrew; gears *k* and *f* are both keyed to the same sleeve and revolve together. The result of this arrangement is that there is a change of speed between *e* and *k* and another change between *f* and *g*. Consequently, a compound-geared lathe may be defined as one in which, when the lathe is running, there are two changes of speed between the gear on the stud and the gear on the leadscrew. With a lathe geared as in Fig. 59, four gears may be changed, a change in any one of which will affect the motion of the leadscrew. These gears are *e*, *f*, *k*, and *g*. It should be apparent that a far greater range of screw cutting can be obtained when there are four gears that can be changed than when there are only two gears that can be changed.

88. The process of choosing the proper change gears for compound-geared lathes is very similar to that pursued in case of simple-geared lathes. The first step is to form a fraction that has for its numerator the number of threads per inch in the leadscrew, and for its denominator the number of threads per inch to be cut. As described in connection with simple-geared lathes, if the fixed gear on the stud differs

in size from the gear on the spindle, instead of using for the numerator of the fraction the number of threads per inch in the leadscrew, use for this numerator the number of threads per inch in the leadscrew multiplied by the number of teeth in the fixed gear on the stud, and divided by the number of teeth in the gear on the spindle. Having found the fraction, the next step is to divide it into two fractions whose product shall be equal to the fraction first found. Then treat each of these two fractions in the same manner as was described in connection with simple-geared lathes, for selecting the change gears. An example will make the process clear.

89. Suppose that for the lathe shown in Fig. 59, the change gears in the set are as follows: 18, 18, 36, 39, 42, 48, 54, 60, 66, 72, 96, the numbers being the number of teeth in the gears. Suppose further that the leadscrew has 6 threads per inch and that the fixed gear on the stud has the same number of teeth as the gear on the spindle. If it were desired to cut a screw having 27 threads per inch, it would be found that with the gears in stock, as given above, it would be impossible to cut this thread in a simple-geared lathe. This is easily shown in the following manner. The number of threads per inch in the leadscrew being 6, the fraction is $\frac{6}{27} = \frac{2}{9}$; the smallest gear in stock has 18 teeth in it, and 18 divided by the numerator 2 is 9. Multiplying both terms of the fraction by 9 the result is $\frac{2 \times 9}{9 \times 9} = \frac{18}{81}$, and there is no gear in stock having 81 teeth. If we attempt to use the gear having 36 teeth (the next largest in stock), it will be found that on dividing 36 by 2 and multiplying both terms of the fraction by the quotient 18, the result is $\frac{36}{162}$. As the largest gear in stock contains only 96 teeth, the result is that there are no gears available for cutting 27 threads. However, let us see if the thread can be cut by using compound gearing. The fraction $\frac{2}{9} = \frac{2}{3} \times \frac{1}{3}$. Treating each of these two fractions in the same manner as in the

case of simple gearing, we divide the number representing the number of teeth in the 36-tooth gear by the denominator of the first fraction 3, obtaining 12. Multiplying both terms of the fraction by 12, we obtain $\frac{24}{36}$. As we have in stock no 24-tooth gear, we experiment with the 72-tooth gear. $72 \div 3 = 24$. Multiplying both terms of the fraction by 24, we obtain $\frac{2 \times 24}{3 \times 24} = \frac{48}{72}$. As we have a 48-tooth gear we proceed to experiment with the other fraction, $\frac{1}{3}$. The smallest gear in stock is 18; hence, multiplying both terms of the fraction by 18, we obtain $\frac{1 \times 18}{3 \times 18} = \frac{18}{54}$, and as we have a 54-tooth gear, the calculation is completed, the only thing that remains now is to determine where the gears are to be placed. The fractions themselves determine this. The gears represented by the numerators mesh with the gears represented by the denominators, and the gears represented by the numerators are in all cases the driving gears. It is usually more convenient to have the smaller of the two gears represented by the numerators on the stud. Therefore, putting the gear having 18 teeth on the stud, it becomes gear *e*, Fig. 59. The gear that meshes with this is gear *k*, which has 54 teeth in it. The other gear on the same spindle as gear *k* is gear *f*, the numerator of the second fraction, which has 48 teeth in it. This meshes with gear *g*, which has 72 teeth on the leadscrew. So far as the motion of the leadscrew is concerned, it does not matter whether the gear having 18 teeth or the gear having 48 teeth is placed on the stud, but the arrangement as selected will probably be easier of adjustment than if the 48-tooth gear were placed on the stud.

Again, suppose it were desired to cut a screw having 1 thread per inch. It would be found impossible to do this in a simple-geared lathe in which the gears in stock were those previously mentioned, and with a leadscrew having 6 threads per inch. This is very easily accomplished, however, when the gearing arrangement is compounded as

shown in Fig. 59. Forming the fraction, it becomes $\frac{6}{1}$. This is equal to $\frac{3}{1} \times \frac{2}{1}$. Multiplying both terms of the first fraction by 18, the result is $\frac{54}{18}$, and multiplying both terms of the second fraction by 36, the result is $\frac{72}{36}$. As we have in stock gears having 18, 54, 72, and 36 teeth, the gear having 54 teeth will be placed on the stud and made to mesh with one having 18 teeth. The gear having 72 teeth will be placed next to the gear having 18 teeth, and will mesh with one on the leadscrew having 36 teeth.

Rule.—*Having formed a fraction in the manner described in the rule for a simple-geared lathe, divide this fraction into two fractions whose product shall be equal to the fraction first formed. Treat each of these fractions in the manner described in the rule for simple-geared lathes. The numerators of the two fractions will be, respectively, the change gear on the stud and the driving gear on the second stud. The denominators will be the gear meshing with the change gear on the stud, and the gear on the leadscrew.*

EXAMPLE.—With the gears and leadscrew mentioned in Art. **89**, what gears are required to cut a screw having 40 threads per inch?

SOLUTION.—Assuming the fixed gear on the stud to be the same size as the gear on the spindle, the fraction becomes $\frac{6}{40} = \frac{3}{20}$. But $\frac{3}{20} = \frac{3}{10} \times \frac{1}{2}$. The only gear in stock, the number of whose teeth is exactly divisible by 10 is the one having 60 teeth. Hence, since $60 \div 10 = 6$, $\frac{3 \times 6}{10 \times 6} = \frac{18}{60}$. As it is probably advisable to use the 96-tooth gear, and $96 \div 2 = 48$, the second fraction becomes $\frac{1 \times 48}{2 \times 48} = \frac{48}{96}$. Therefore, the driving gears are 18 and 48 and the driven gears are 60 and 96. Ans.

90. Cutting Right-Hand and Left-Hand Threads. As lathes are commonly geared, they will cut a right-hand thread when one intermediate gear is used and a left-hand thread when two intermediate gears are used. The number

of teeth in the intermediate gears has no effect on the thread cut so long as they are all in one continuous train without compounding. In compound-geared lathes the compound gears take the place of the intermediate for right-hand thread cutting, while for cutting a left-hand thread, it is necessary to introduce another intermediate gear into the train, either between the driving stud and compound stud or between the compound stud and the lead-screw. Most lathes have gearing in the head for reversing the feed, and in such a case this can be used to reverse the motion when cutting left-hand threads.

THE THREADING TOOL.

91. Shape of Threading Tool.—When a screw thread is to be cut, the tool is ground and shaped as shown in Fig. 60. The tool is ground flat on top. The side faces NS and GK are ground to form an angle of 60°.

FIG. 60.

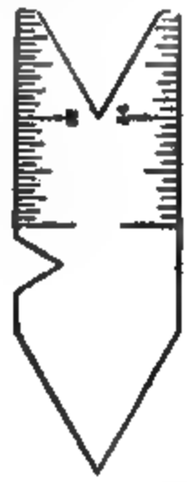

FIG. 61.

This angle is tested by using a thread gauge, shown in Fig. 61. When the gauge is used to test the angle of the point of the tool, it should be held so that it lies flat with the top face in the line AB, Fig. 60. If it is desired to measure the exact angle that the two faces make with each other, the gauge should be held at right angles to the faces, or along the line PQ. It will be apparent that the way the

tool fits the gauge will depend on the way the gauge is held to the tool. In order to make the angle at the point along the line *A B* equal 60°, it will be necessary to make the angle of the faces along the line *P Q* a little over 60°. Little attention, however, is paid to the exact angle, since the angle along the line *A B* is the important one. The angle of front rake and clearance of the tool is shown by the line *E F*. This should be about 15° with the perpendicular *C D*.

92. Grinding Threading Tool.—These tools may be ground by the same method used in grinding ordinary lathe tools, the gauge being used to test the angle of the point. Whenever it is possible, it is better to grind the tools in machines specially designed for grinding tools. With these machines, it is possible to grind more accurate angles and truer faces than it is by hand.

93. Setting Threading Tool.—The tools should be clamped in the tool post at such an angle to the work, that the faces of the tool *N S* and *G K*, Fig. 60, will make equal angles with the work. This is accomplished by using a thread gauge, as shown in Fig. 62. The back of the gauge

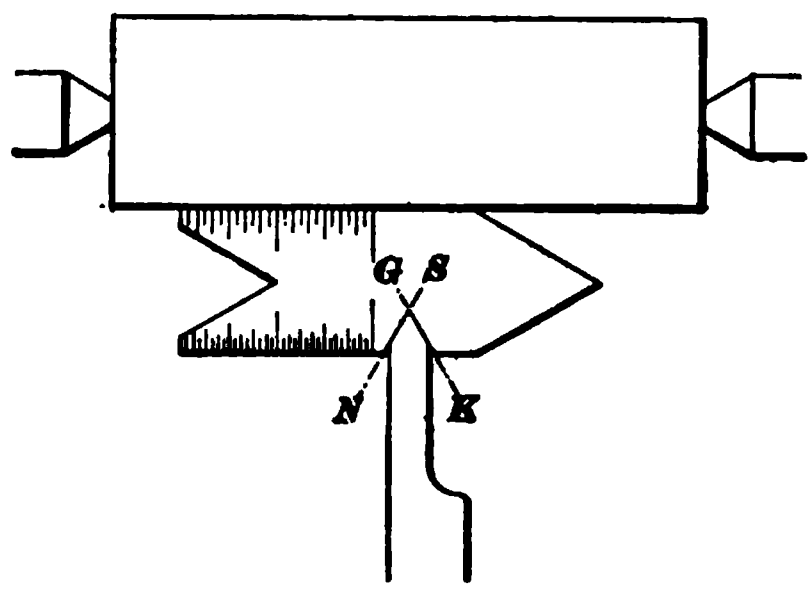

FIG. 62.

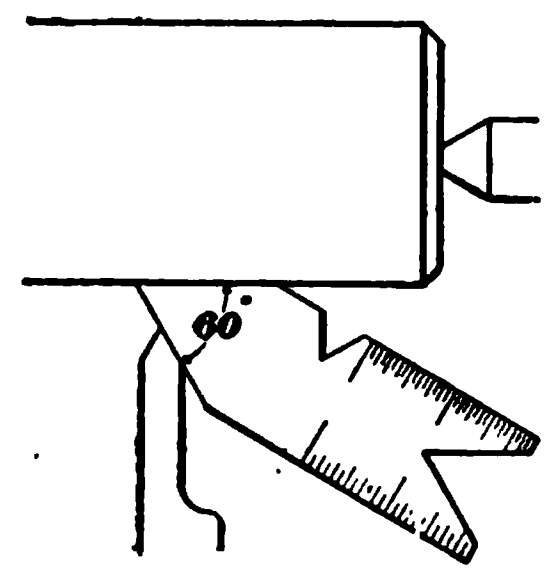

FIG. 63.

lies flat against the work while the point of the tool is moved so that it just fits the notch in the front of the gauge. It will be seen that since the point of the tool is ground to an angle of 60° and the sides of the threads to be cut make an angle of 60°, the angle between one of the faces of the tool

and the work will be an angle of 60°. It will therefore be found more convenient on some kinds of work to hold the gauge as shown in Fig. 63. When one edge of the tool is properly set, the other edge will be at the correct angle, provided the tool is correctly ground.

CUTTING THE THREAD.

94. Operation of Cutting the Thread.—Before starting the cut, care should be taken that the tool is firmly clamped in the tool post, that the dog is tight on the work, and that all gearing is properly adjusted so that nothing can slip when the cut is being made. The feed should be from right to left when the lathe is running forward. This will cut a right-hand thread. The tool is moved forward so that the point just touches the work. The lathe is started forward and continues in this direction until the tool has fed along the work a distance equal to the desired length of thread. When the tool reaches that point, it is quickly drawn away from the work by a turn of the cross-feed screw with one hand, while the lathe is quickly reversed by swinging the shifter handle with the other hand. By reversing the lathe, the work moves backward and the tool will feed back to the starting point.

95. Stop for the Threading Tool.—To keep the tool from cutting too deep, a stop is arranged on the cross-slide, as shown in Fig. 64. The stop *b* is rigidly fastened to the slide by tightening the screw *a*. A screw *s*, with a large shoulder and nurled head, passes

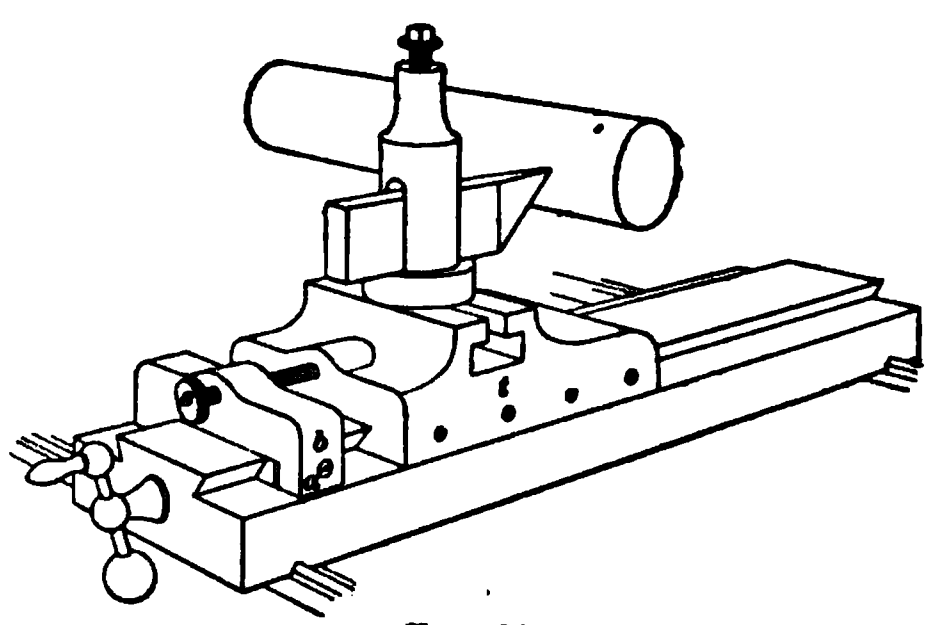

FIG. 64.

loosely through the stop and screws into the tool block *t*. When the stop is adjusted as shown in the figure, the tool and tool block can be moved away from the work, since the screw *s* is not threaded to the block *b*. When the block is moved forward, it can only move until the head of the screw *s* comes against the stop.

After the tool has passed over the work and it is desired to take a deeper cut, the stop-screw *s* is unscrewed a partial turn; this will allow the tool to be advanced slightly, depending on the amount the screw is turned. After the first cut or scratch is made on the work with the point of the tool, it is good practice to hold a scale against the threads and count the number to the inch to see if the lathe is cutting correctly. If a mistake is discovered, it can be rectified, but if the error of pitch is not discovered until the thread is cut, there is no remedy.

FITTING THE THREAD.

96. A Perfectly Fitted V Thread.—As was shown by Fig. 40, a V thread is sharp at its point and at its root. If a 1-inch thread were being cut, the thread would be complete when the groove cut by the tool just formed the sharp point of the thread. It is difficult to know just when this point is reached, therefore the work is taken from the lathe and tested with a gauge or in the piece it is to fit.

Fig. 65 represents a section through a bolt and nut, showing how accurately the faces of the threads should fit each other.

FIG. 65.

97. Callipering Threads.—Before the final testing in the gauge or work, the thread may be tested by the use of

specially prepared calipers. These calipers are made very thin on their point, so that they fit into the V's of the

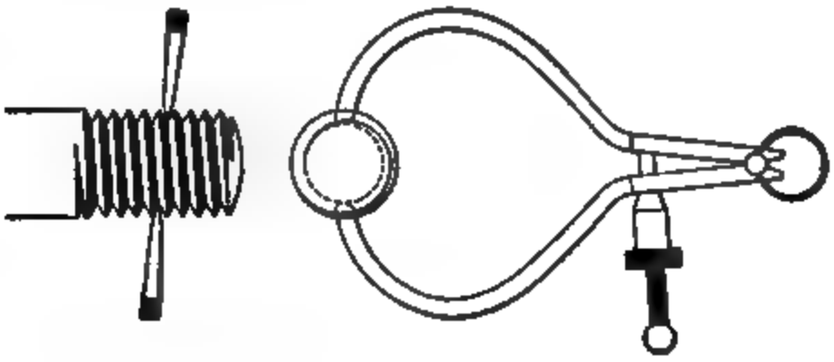

FIG. 66.

thread and measure the diameter at the root, as shown in Fig. 66. The calipers may be set from a tap or a standard gauge.

98. Effect of Using a Dull Threading Tool. Fig. 67 shows a bolt that has been threaded with a dull-pointed tool. Because of the rounded point of the tool, the threads are rounded at the bottom. When this kind of a thread is tested in a perfectly threaded nut, as shown, it will be seen that it will not enter until the thread is cut sufficiently deep to allow the rounded root of the thread to pass in. While this may hold the work so that no lost motion can be detected at first, it is evident that the piece will soon wear loose, since there is no bearing on the sides of the threads.

FIG. 67.

99. Effect of Using a Dull Tap.—Fig. 68 shows another case where the nut to be fitted has been cut with a dull tap, which left the threads slightly rounded in the bottom. When a sharp-threaded screw of full diameter is tried in such a nut, it will not enter. By cutting the screw

smaller, it will go in, but the fit will be as shown, the bearing being entirely on the points of the threads. In practice, when the thread has been cut to a sharp point and it will not enter, this trouble should be looked for, and if it is found that the threads in the nut are imperfect, the points of the screw being cut should be slightly rounded with a file. A screw thread should fit by bearing on the sides of the threads and not on the points.

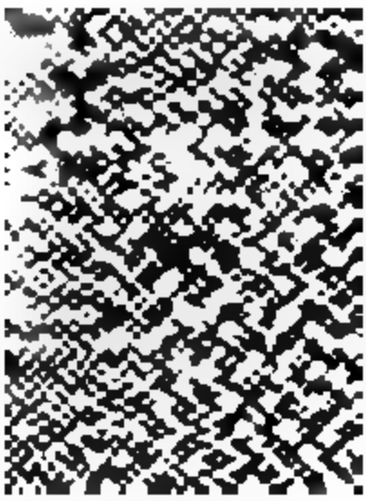

FIG. 68.

100. Advantage of Large Tap Holes.—In machine construction where holes are drilled and tapped for V threads in various parts of castings, it is customary to drill the holes slightly larger than would be necessary to cut such a full sharp thread as shown in Fig. 65. After the holes are tapped, they are more nearly the shape shown somewhat exaggerated in section in Fig. 69, where it may be seen that the threads are not full on the points. When a bolt is being fitted to this kind of a tapped hole, the necessity of keeping a very sharp point on the tool and cutting the thread sharp at the root is not so important.

FIG. 69.

101. Effect of a Slight Difference in Pitch on the Fit.—Fig. 70 shows a section through a bolt and nut having slightly different pitches. In fitting such a bolt, it will be found upon trial that it enters the nut for a few turns easily, growing tighter as it is screwed in, with the

appearance of being tapered. After more cutting, the bolt will pass through the nut, appearing to fit. When the end of the bolt is once passed through the work, it will not fit any more closely as it is screwed along the bolt. When a bolt and a nut are of slightly different pitches, the effect is much more noticeable if the nut is long than if the nut is short. It may be seen from Fig. 70 just what the real contact is. In this case, the thread on the bolt is of a coarser pitch than the thread on the nut, and bears only on the first and last threads of the nut.

FIG. 70.

102. Fitting Threads on the Same Lathe.—When two threads are to be cut that are desired to fit each other perfectly, the internal thread being long, it is desirable that they each be cut on the same lathe. By the use of the same lathe, they can be made to have the same pitch, and if there is any error in the pitch, it will be the same in each thread.

103. Putting Work Back into the Lathe After Testing.—If, after testing the work carefully, it is found to be too large, it should be put back into the lathe and a sufficient number of light cuts taken to reduce it to the desired size. Care must be taken to notice and mark the notch in the face plate used for the tail of the dog, and to put the dog back in the same position from which it was taken. A failure to do this will cause the point of the tool to start another thread that will destroy the one nearly completed.

104. Precautions to Observe in Thread Cutting.—When cutting screws in a lathe, lard oil should be freely applied to the tool and the work. The finishing cuts should be light shaving cuts. The tool should be made sharp and keen with an oilstone.

RESETTING THE TOOL.

105. When the tool has been removed for sharpening or other purpose, it may be reset as follows: Adjust the tool in the tool post to fit the gauge, Fig. 62, the same as before the thread was started. Turn the lathe forward and note whether the tool point comes opposite the cut in the work or not. If not, drop the intermediate gear *c*, Fig. 58, away from the gear *b* on the spindle. Turn the lathe forward until the tool comes exactly opposite the notch or thread in the work. Bring gears *b* and *c* together again, which will throw in the feed, and proceed to cut the thread as before. It should be noted that the lathe must always be turned forwards. This is to take up the slack or backlash in the gears and the lead-screw. This backlash can be noted at the time the lathe is reversed, when it will be seen that the work may make a part of a turn before the tool will start to feed back. This will cause the tool to drag behind, and if the tool should be brought up to the work when it is running backwards, it would not fit in the notch as it did when the lathe was running forwards.

OPENING THE LEAD NUT.

106. When cutting threads on the ordinary lathe, after the thread is once started, the feed-nut is seldom opened from the leadscrew. In some cases, however, this is allowable. Suppose that a screw with 10 threads per inch is being cut with a leadscrew of 6 threads per inch. If the feed-nut is opened and the carriage moved along one notch or thread on the leadscrew, so that the nut will just close again in the second notch, the carriage will have moved $\frac{1}{6}$ inch. The point of the lathe tool will also have moved $\frac{1}{6}$ inch. The second notch or thread on the screw being cut is $\frac{1}{10}$ inch from the first, so it will be seen that the point of the tool has moved a little beyond the notch of the thread being cut. If the carriage should be moved 2 threads on the leadscrew, the tool point would move along $\frac{2}{6}$ inch. This position would not correspond with any thread on the screw being cut. If we should move it 3 threads and close the nut,

the tool point would have moved $\frac{3}{6}$ or $\frac{1}{2}$ inch. At this point it would be found that the point of the tool would come opposite the fifth thread of the screw being cut, which would be $\frac{5}{10}$ or $\frac{1}{2}$ inch on the screw being cut. If we move along 6 threads or 1 inch on the leadscrew, we would move 10 threads or 1 inch on the screw being cut. From this it will be seen that in the case of a 6-thread leadscrew cutting 10 threads, the nut may be opened and the carriage moved along, and for every $\frac{1}{2}$ inch along the leadscrew the nut may again be closed on the thread and the cutting proceed without damage to the thread; for any other position the nut will not close, or, if it does, the tool point will not come opposite the thread being cut. If the thread to be cut were 11 pitch, it would be found that the nut could only be closed on the leadscrew at spaces 1 inch apart. If the thread to be cut were $2\frac{1}{2}$ pitch, the spaces on the leadscrew would be 2 inches apart. If the threads to be cut were 6, 12, 18, 24, or any multiple of the pitch of the leadscrew, then the split nut might be opened and again closed in any place on the screw and the tool point would be found to come opposite the thread being cut; for if the tool moved $\frac{1}{6}$ inch, it would be equal to 2 threads on the 12-thread screw, 3 threads on the 18-thread screw, 4 threads on the 24-thread screw, and so on.

107. *When cutting a screw, the number of whose threads per inch is exactly divisible by the number of threads per inch in the leadscrew, the lathe need not be reversed, but may be allowed to run in one direction all the time.* When the tool has fed to the end of the cut, it is quickly drawn out, while the feed is stopped by opening the split nut. The carriage is then moved back by hand, the feed thrown in, and the operation repeated.

AN IMPROVED METHOD OF GEARING LATHE FOR SCREW CUTTING.

108. The operation of changing the gears for every desired pitch of screw consumes considerable time and offers a chance to make mistakes. A new system of gearing has been introduced which is applied to small lathes. A lathe

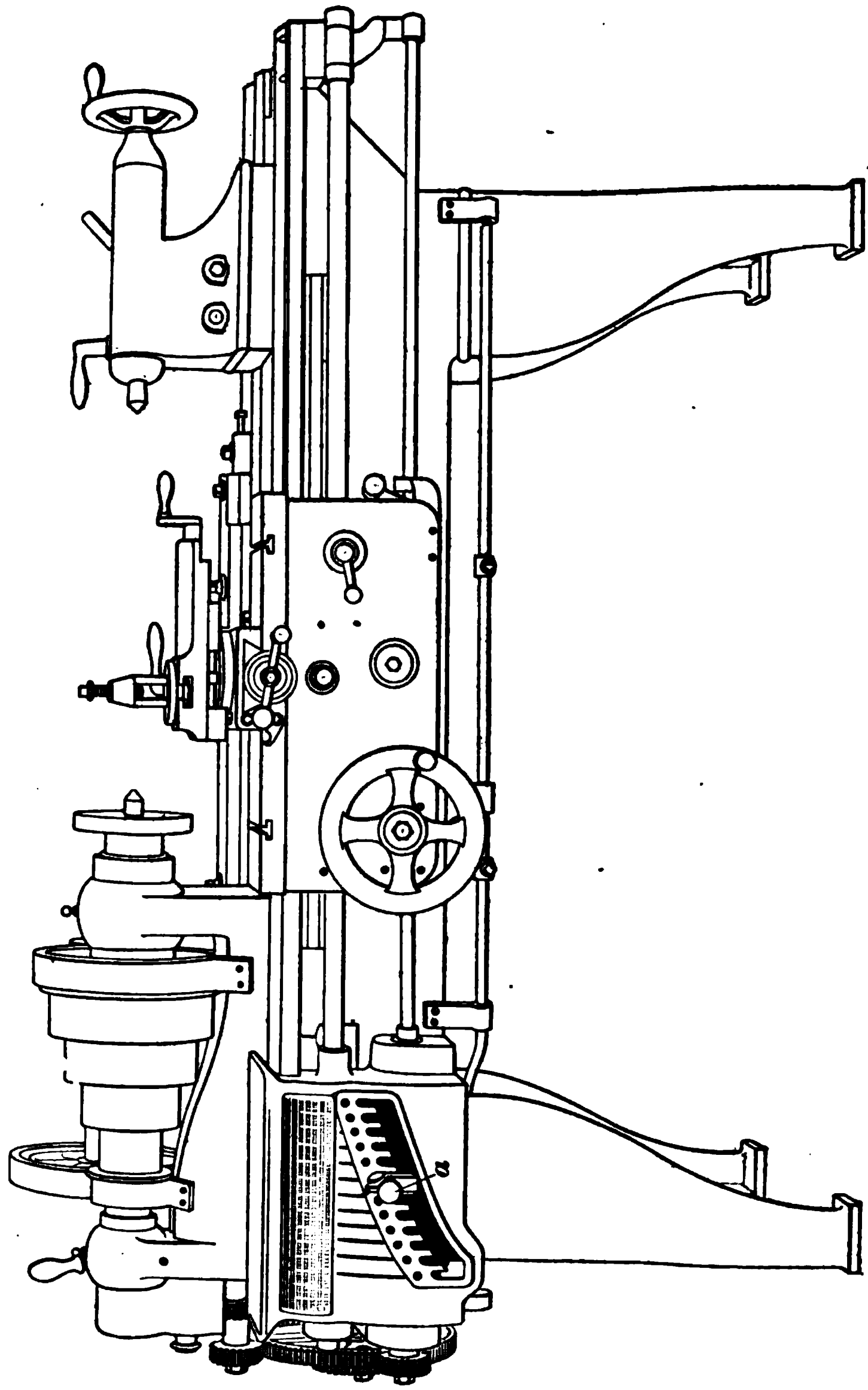

FIG. 71

so geared is shown in Fig. 71. In this system all the change gears are on a shaft in the gear-box seen at the front of the lathe, directly under the headstock. To change from one set of gearing to another, the knob *a*, which moves in the slot in the gear-box, is moved to a position indicated by the table. This is a very convenient arrangement when compared with the older methods. This particular lathe possesses another feature that makes it desirable for screw cutting, viz., the reversing of the feed-motion by a lever in the apron. This makes it possible to keep the work running in one direction all the time.

LATHE WORK.

(PART 3.)

SCREW CUTTING.

UNITED STATES AND BRITISH STANDARD THREADS.

CUTTING UNITED STATES STANDARD THREADS.

1. Tool for Cutting United States Standard Threads.—The operation of cutting United States standard threads is similar to that of cutting V threads. The only difference is in the tool, and that consists of grinding a very small portion from the point of the tool. It will be seen by reference to Fig. 45, *Lathe Work*, Part 2, that the United States standard thread is flat in the root. The width across the flat in the root and also at the point of the thread varies for every pitch of thread, since one-eighth the space between the threads is removed from the points and filled in at the roots, and this amount would vary with each pitch. The tool should therefore be ground to an angle of 60° as for V threads, and the proper amount taken from the point. The best way to determine the amount to be removed from the point is to try the tool into a standard tap or to have a gauge to which the tool can be fitted.

2. United States Standard Thread Gauge.—Such a gauge is shown in Fig. 1. The figures opposite the different notches indicate the notch to be used in shaping the tool for that pitch. The following table gives the widths of

For notice of copyright, see page immediately following the title page.

49—23

TABLE I.

UNITED STATES STANDARD SCREW THREADS.

Diameter of Screw.	Threads Per Inch.	Diameter at Root of Thread.	Width of Flat.	Double Depth of Thread. $x-y$
$\frac{1}{4}$	20	.1850	.0063	.0650
$\frac{5}{16}$	18	.2403	.0069	.0722
$\frac{3}{8}$	16	.2936	.0078	.0814
$\frac{7}{16}$	14	.3447	.0089	.0928
$\frac{1}{2}$	13	.4001	.0096	.0999
$\frac{9}{16}$	12	.4542	.0104	.1083
$\frac{5}{8}$	11	.5069	.0114	.1181
$\frac{3}{4}$	10	.6201	.0125	.1299
$\frac{7}{8}$	9	.7307	.0139	.1443
1	8	.8376	.0156	.1624
$1\frac{1}{8}$	7	.9394	.0179	.1856
$1\frac{1}{4}$	7	1.0644	.0179	.1856
$1\frac{3}{8}$	6	1.1585	.0208	.2165
$1\frac{1}{2}$	6	1.2835	.0208	.2165
$1\frac{5}{8}$	$5\frac{1}{2}$	1.3888	.0227	.2362
$1\frac{3}{4}$	5	1.4902	.0250	.2598
$1\frac{7}{8}$	5	1.6152	.0250	.2598
2	$4\frac{1}{2}$	1.7113	.0278	.2887
$2\frac{1}{4}$	$4\frac{1}{2}$	1.9613	.0278	.2887
$2\frac{1}{2}$	4	2.1752	.0313	.3248
$2\frac{3}{4}$	4	2.4252	.0313	.3248
3	$3\frac{1}{2}$	2.6288	.0357	.3712
$3\frac{1}{4}$	$3\frac{1}{2}$	2.8788	.0357	.3712
$3\frac{1}{2}$	$3\frac{1}{4}$	3.1003	.0385	.3997
$3\frac{3}{4}$	3	3.3170	.0417	.4330
4	3	3.5670	.0417	.4330
$4\frac{1}{4}$	$2\frac{7}{8}$	3.7982	.0435	.4518
$4\frac{1}{2}$	$2\frac{3}{4}$	4.0276	.0455	.4724
$4\frac{3}{4}$	$2\frac{5}{8}$	4.2551	.0476	.4949
5	$2\frac{1}{2}$	4.4804	.0500	.5196
$5\frac{1}{4}$	$2\frac{1}{2}$	4.7304	.0500	.5196
$5\frac{1}{2}$	$2\frac{3}{8}$	4.9530	.0526	.5470
$5\frac{3}{4}$	$2\frac{3}{8}$	5.2030	.0526	.5470
6	$2\frac{1}{4}$	5.4226	.0556	.5774

flats for different pitches and also the diameter of the screw at the root of the threads.

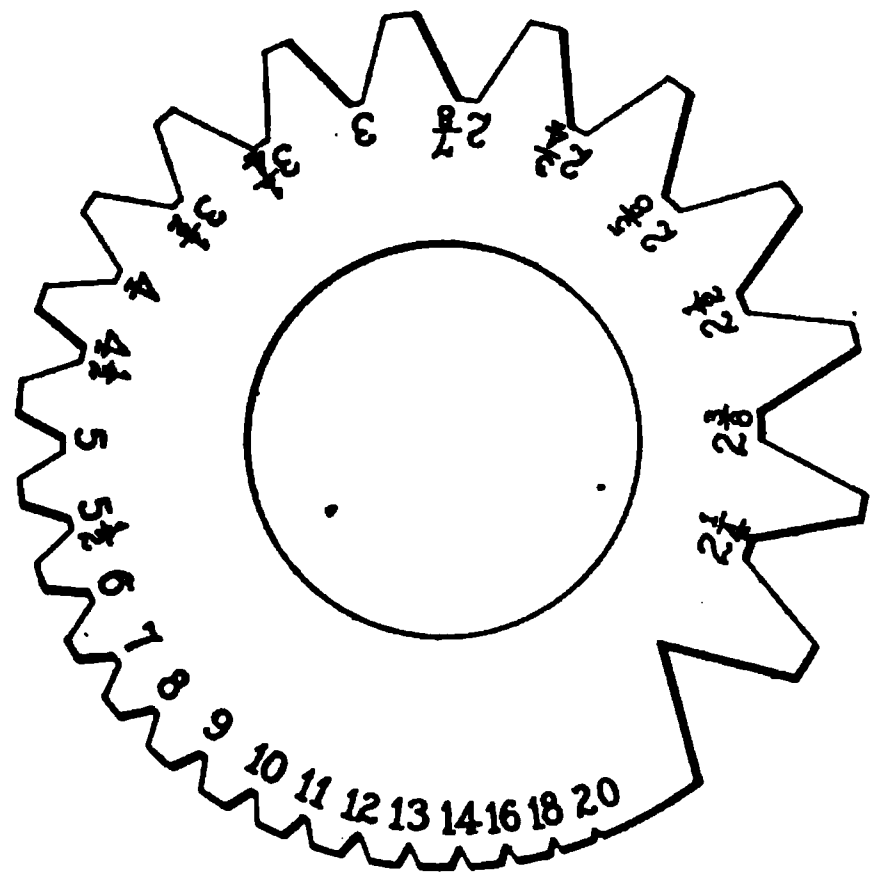

FIG. 1.

3. Cutting United States Standard Threads.—When cutting United States standard threads, the cutting is continued until the space between the grooves is equal to the width of the flat of the desired thread. The mistake is sometimes made of cutting until the thread comes sharp like a V thread and then cutting off the point. This method is incorrect.

CUTTING BRITISH STANDARD THREADS.

4. Tool for Cutting British Standard Threads.—The operation of cutting British standard threads is similar to that just described. The difference in thread is due to the shape of the tool. Every pitch of thread requires a tool of particular size and shape, the same as the United States standard, but because of the curved point and root of the thread (see Fig. 46, *Lathe Work*, Part 2), the tool is much more difficult to make. Fig. 2 shows the plan of a tool as it is applied to the work. It will be seen that the point is rounded and round corners are formed on the sides of the

tool, to form the round points of the threads. These tools are thus in reality *forming tools*, and are sharpened by grinding on the top face. The tools are formed by using a hob shaped like a tap, with eight or ten flutes. These hobs are accurately formed screws before the flutes are cut. After the hob is fluted and hardened, it is held between the lathe centers while the blank tool is held in the tool post. As the hob revolves, the tool blank is fed up to it; at the same time, it is fed along by the leadscrew. By repeating these operations, as in cutting a screw, the blank is soon formed into a threading tool. After hardening, it is ready to be used to cut the desired screw.

FIG. 2.

SPECIAL THREADS.

CUTTING SQUARE THREADS.

5. Tool for Cutting Square Threads.—The tool used for cutting square threads is similar to a parting tool except for its angle of side rake, which varies for every diameter and every pitch of thread. Suppose it is desired to cut a square thread of 2 threads per inch, as shown in Fig. 3. Since the thread is ½ inch pitch, the space and thread together would be equal to ½ inch, while the space or

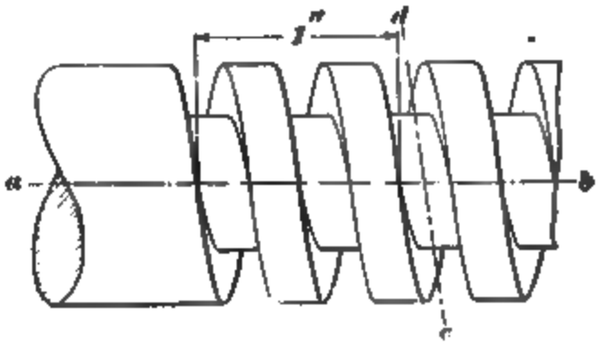

FIG. 3.

the thread would each be ¼ inch wide. The tool therefore would be ¼ inch thick. It will be seen from the figure that the space between the threads slopes to one side, as shown by the line *c d*. The tool, therefore, must have sufficient side rake to allow it to run freely in this space. The angle of side rake is found by laying off on the line *E F*, Fig. 4, a distance equal to the circumference of the root of the thread. At *F* erect a perpendicular *F R*, equal to the pitch, and draw *E R*. Angle *R E F* is the angle of side rake

Fig. 4.

Fig. 5.

or the slope to one side that the tool blade *C D*, Fig. 5, should make with the line *G K*. The tool blade should be ground thinner at the bottom than at the top, so that the sides of the tool will not rub against the sides of the thread.

6. The thread should be cut as deep as it is wide, thus making the threads square. When the screws are large and it is desired to finish the sides of the threads very smooth, the threading tool, Fig. 5, is made a little thinner than the desired width of space. After the notch is cut the desired depth, a side tool may be used for cutting the side of the threads, the blade being set flat with the side. Care must be taken that the tool does not catch and spring into the work.

THE 29°, OR ACME, THREAD.

7. Use of Acme Thread. — In many instances, a coarse pitch screw is desired that has but little friction on the sides, but is neither a square thread nor a V thread. Without a standard, there are apt to be differences in shape used by different manufacturers. In order that there may be a standard, the 29° screw thread, called the **acme thread,** has been proposed, and is extensively used in many places to take the place of square threads.

8. Shape of Acme Thread.—The sides of the thread are inclined 14½°, making the included angle 29°. This is the angle that is used for cutting worm-threads. The depth of the thread is the same as a square thread of the same pitch. Fig. 6 illustrates the form of the thread, and the accompanying formulas and table give the proportions for threads of various pitches. It will be observed that the top of the thread does not touch the bottom of the space. This opening represents the clearance, which is provided to insure a perfect fit upon the sides of the thread.

FIG. 6.

9. The various parts of 29° screw thread, acme standard, are obtained as follows:

A = width of point of tool for screw or tap thread;
B = width of point of screw or nut thread;
C = diameter of tap;
D = diameter of screw;
E = diameter of screw at root of thread;
T = number of threads per inch;
a = depth of thread.

$$A = \frac{.3707}{T} - .0052. \qquad E = D - \left(\frac{1}{T} + .02\right).$$

$$B = \frac{.3707}{T}. \qquad a = \frac{1}{2\,T} + .01.$$

$$C = D + .02.$$

TABLE II.

TABLE OF ACME THREAD PARTS.

Number of Threads Per Inch. Linear.	Depth of Thread. *a*	Width at Top of Thread. *b*	Width at Bottom of Thread. *c*	Space at Top of Thread. *d*	Thickness at Root of Thread. *e*
1	.5100	.3707	.3655	.6293	.6345
1½	.3850	.2780	.2728	.4720	.4772
2	.2600	.1853	.1801	.3147	.3199
3	.1767	.1235	.1183	.2098	.2150
4	.1350	.0927	.0875	.1573	.1625
5	.1100	.0741	.0689	.1259	.1311
6	.0933	.0618	.0566	.1049	.1101
7	.0814	.0529	.0478	.0899	.0951
8	.0725	.0463	.0411	.0787	.0839
9	.0655	.0413	.0361	.0699	.0751
10	.0600	.0371	.0319	.0629	.0681

SPRING OF THE TOOL WHEN CUTTING A THREAD.

10. Cause of Spring of the Tool.—When the tool is slender or slightly dull, there is a tendency for the tool to spring to one side, away from the work, just at the time it is entering the cut. It will be seen that, as the tool starts into the cut for the first half revolution, the cutting is done entirely along one edge. This will tend to spring the tool away from the cut. After the work has made a complete revolution, the cutting on the two sides of the point balance each other and the tendency to spring the tool is

reduced. This spring of the tool will make the first thread on the work slightly thicker than the others, so that, in testing work, the nut may be found to be tight on the end, while, after it has passed over this thick thread, the fit will be loose. This trouble is very apt to occur when cutting square threads. The remedy is to run over that part of the cut with the tool a few more times, until the thread is cut down. This tendency to spring is greatly increased when the tool has insufficient side rake or clearance.

11. Cause of Tools Breaking.—Sometimes the tool will show a tendency to break. The point of the tool may be chipped off from the right side, as shown in plan, Fig. 7. When a tool shows this kind of a break, it is evidently caused by the dog slipping. It is evident that the breaking strain was in the direction of the arrow. When the tool takes a heavy cut and the dog slips, the work will stop revolving while the lathe and feed continue. When the feed continues and the point is in the thread, the tool must either slip or break. Sometimes a tool will break by chipping off the top face, as indicated in Fig. 8.

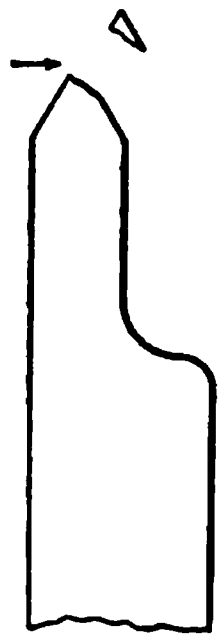

FIG. 7.

This kind of a break indicates that the lathe was reversed and the work was running backwards before the tool was withdrawn from the work. In many instances, a careful observance of results will enable the operator to determine the cause of the trouble.

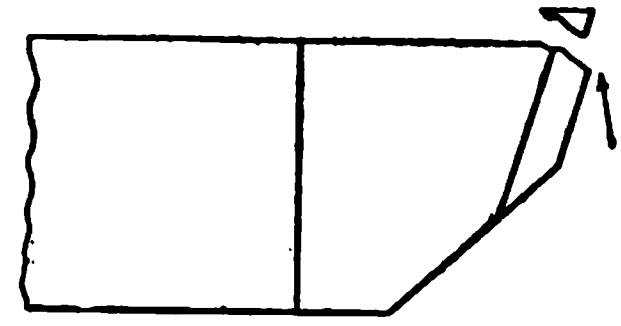

FIG. 8.

HEIGHT OF TOOL FOR CUTTING THREADS.

12. Correct Height of Thread-Cutting Tool.—When a thread is being cut, the tool should be at such a height that if a line is drawn from the center of the work through the point of the tool, it will just lie flat with the

top face of the tool. If the tool is correctly ground, this position will cut the correct angle of thread. When a section of a thread is given, it is always supposed to be taken through the axis. Suppose we have a correctly shaped thread, Fig. 9, and a section is taken parallel to the axis but above it, as shown. By examining the shape of the threads at this section, it is seen that the sides are not straight, but convex; also that the height of the thread appears to be greater at this section than when a section is taken on the axis.

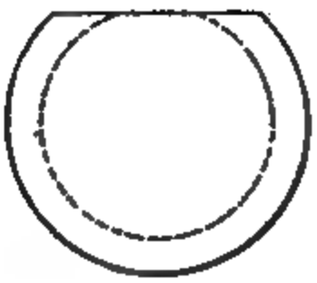

FIG. 9.

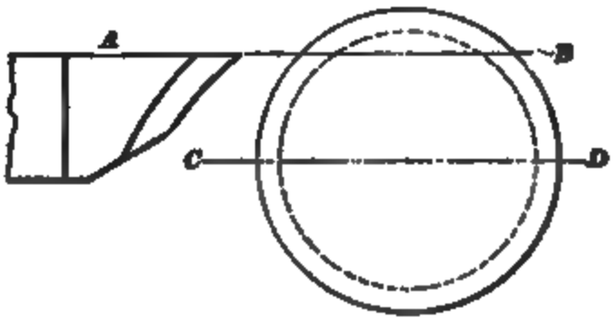

FIG. 10.

13. Incorrect Height of Thread-Cutting Tool.—If a tool is correctly ground, and set as much above the center as shown by the line *A B*, Fig. 10, and a thread is cut to a sharp point, it will be found that on this section the sides of the threads are straight and form the correct angle with each other. It will be noticed that on the line *C D* the sides of the thread are concave, as at *a*, and that they are not as deep as they should be. It will thus be seen that by setting the tool above the center, an imperfect thread is cut.

14. It is possible to cut a perfect thread with the tool above the center, provided the tool is correctly shaped for that position. A correct thread could be cut by making

the sides of a tool curved as in Fig. 11, these curves being taken from the curves of the section of the threads in Fig. 9. The tool must be set as much above the center as the section was taken.

15. Top Rake to Threading Tools.—It will be seen that the ordinary threading tool that cuts with its two edges cannot be given any top rake or keenness. By means of the compound rest set at an angle of 60° with the center line of the work, as shown in Fig. 12 (*a*), and a tool shown in Fig. 12 (*b*), a thread may be cut with a tool having top rake. The tool is ground so that the broad cutting edge *C D* makes an angle of 60° with the side of the tool, while the top face is given slope or top side rake. When the cut is taken, the tool is fed into the work by the compound rest. Since the rest is set at an angle of 60°, it may be seen that the side of the tool *A B* will just slide by the side of one thread while all the cutting is done with the keen edge *C D* of the tool.

Fig. 11.

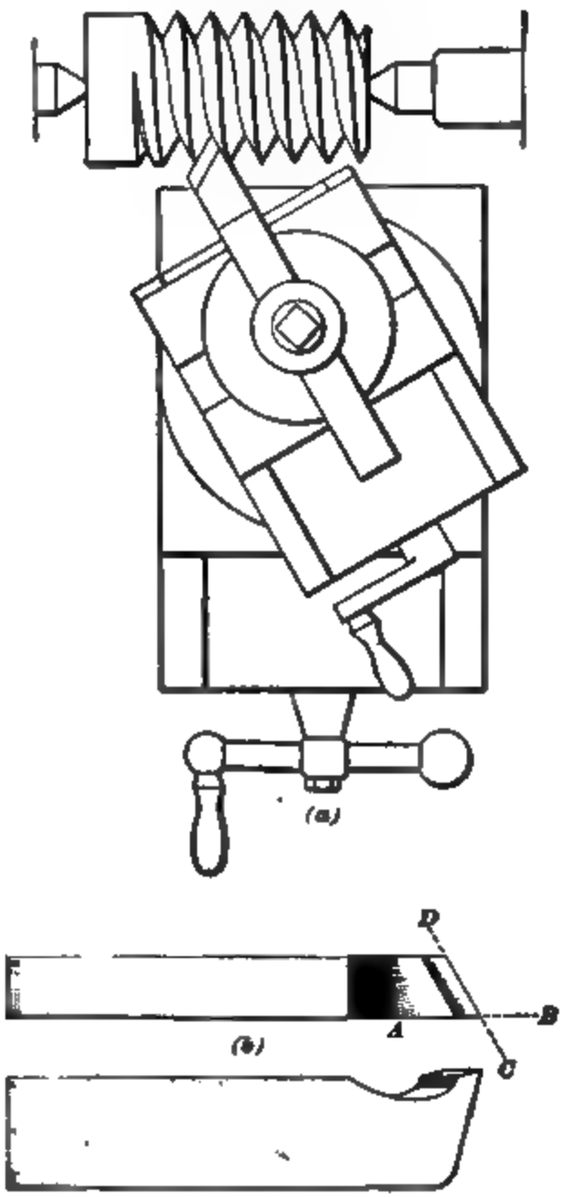

Fig. 12.

CUTTING DOUBLE OR TRIPLE THREADS.

16. Cutting Double Threads. — When a double thread is to be cut, it must be remembered that two threads are to be cut in the space that would be required for a single thread.

To cut a double V thread, proceed as in cutting a single thread until the space left between the grooves is equal to the width of the grooves, as shown in Fig. 13. The work is then given half a turn so that the point of the tool will be opposite the center of the uncut part, as shown. The work may be given this half turn by removing it and turning it so that the tail of the dog is in the notch of the face plate diametrically opposite the one used for the first thread. Another and better method is to disconnect the feed-gears and then turn the lathe and work half a turn. Suppose a change gear with 48 teeth is on the stud. One of the teeth that meets with the intermediate gear may be marked with chalk, after which the two gears may be disconnected. By turning the lathe so that this change gear passes over half its number of teeth, or 24 teeth, the work will also have made half a revolution. The gears are then brought together and the second thread cut the same as the first. If the lathe is compound-geared between the spindle and stud, instead of turning the stud gear half a turn, it is turned a proportional part, depending on the ratio of the compound.

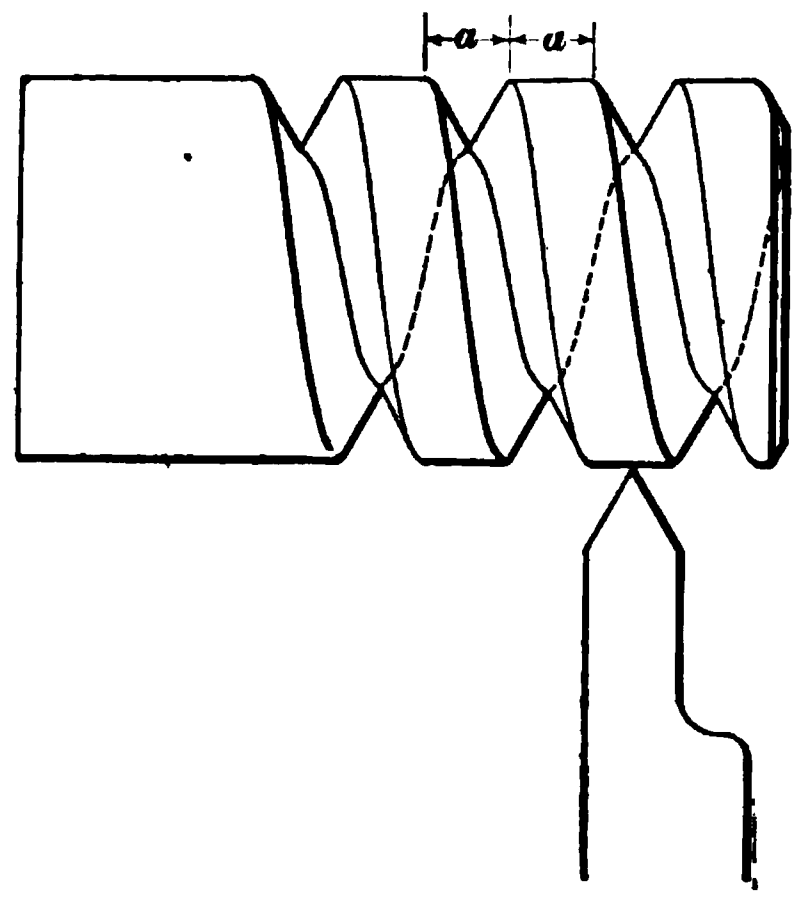

FIG. 13.

17. Cutting Triple Threads.—To cut triple threads, after the first thread is cut, the space between the grooves

should be double the width of the groove. The work is given a third of a revolution and the second thread cut, after which another third of a revolution is given and the third thread is cut. A similar method is used for cutting quadruple threads.

INSIDE SCREW CUTTING.

18. Holding the Work for Inside Screw Cutting.—When an internal thread is to be cut in the lathe, the work is held in a chuck or on a flat plate, the same as for boring.

19. Tool for Inside Screw Cutting.—Inside threading tools are similar to boring tools except that the point

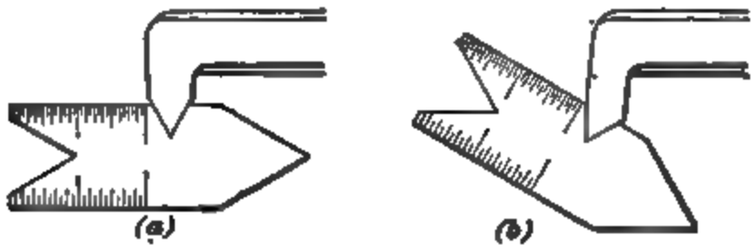

FIG. 14.

is ground to the shape necessary to cut the desired thread. In grinding an inside threading tool for a V or United

(a)

FIG. 15.

States standard thread, the point is ground to fit the gauge when the back of the gauge is nearly parallel to the

shank of the tool, Fig. 14 (*a*). If the tool fitted the gauge when held in the position shown in Fig. 14 (*b*), it would not go far into the hole before the back of the tool would touch the work. Fig. 15 (*a*) and (*b*) show methods of holding the gauge against the work in order to set the tool true. Fig. 16 shows the result of untrue grinding, which necessitates setting the shank of the tool at an angle with the axis of the hole, and it also shows how the tool may be pushed so far away from its cut at the front, when running the lathe backwards, that the tool will drag in the hole and spoil the first threads.

FIG. 16.

20. Stop for Inside Screw Cutting.—When cutting inside threads, the **stop** shown in Fig. 64, *Lathe Work*, Part 2, may be used by taking the screw out of the stop and putting it in the tool block so that it comes between the tool block and the stop. For inside screw cutting, it is necessary to move the tool in an opposite direction, to take the tool out of the cut, from that required in outside screw cutting. It is therefore necessary to adjust the stop-screw so that the head of the screw comes against the stop. Deeper cuts may be made by turning the screw into the tool block.

TESTING INSIDE THREADS.

21. Moving Tool Away From Work.—In most cases, the work cannot be taken from the lathe and must be tested in place. The tool can be moved out of the way by reversing the lathe and allowing the carriage to feed back far enough to allow the gauge to be used. This is a very slow way and need not be used. Sometimes it is possible to move the tool back, by means of the cross-slide, far enough

to allow the gauge to be used. If the tool is brought back to the stop after the work has been tested, it will be in place to continue the work. Another method is to open the feed-nut in the apron, and move the carriage by hand out of the way. When this is done, some means must be provided whereby the carriage can be brought back to the same place and the feed-nut locked as before. This may be done by making a mark on the bed of the lathe, or, better, by measuring from the point of the tool to the work, as shown in Fig. 17. After testing, the tool can be moved back so that the measurement is the same as before and the feed thrown in. Care should be taken that the lathe is not turned while the feed-nut is opened, for it will cause trouble in getting the feed to start again in the correct place.

FIG. 17.

22. When the pitch of screw to be cut is a multiple of the pitch of the leadscrew, this care is not necessary, for the tool will come correctly into the cut whenever the feed-nut is closed on the leadscrew. When cutting these screws of multiple pitches of the leadscrew, it is possible to keep the lathe running forwards all the time by throwing out the feed and moving the tool and carriage by hand back to the starting point. This operation will save much time.

23. Testing Inside Threads With a Gauge.— After the cutting tool has been moved away from the work, the gauge should be screwed in, taking care to have it exactly in line with the hole. Care should also be taken to see that the first thread is not thicker than the others, owing to the spring of the tool at the beginning of the cut. Sometimes a tap is used in place of a gauge, and in this case

the tap is sometimes allowed to take a very light cut from the hole, especially when square threads are being cut. When the tap is used for taking a light cut, in order to finish the thread, the tool is usually moved back by means of the cross-feed, and the tail-center is introduced into the center in the shank of the tap, so as to guide it while it is being passed through the work. Sometimes, when the piece is in a rather light chuck, the latter may be removed from the spindle and the work tried upon the piece that it is to fit. This is very often done when the thread being cut is inside of a new face plate or chuck back, the work being tried upon the spindle of the lathe that it is intended to fit while it is still held in the chuck.

THREADING TAPERED WORK.

24. Setting Tool for Threading Tapered Work.—In setting the tool for taper turning, the gauge is put against

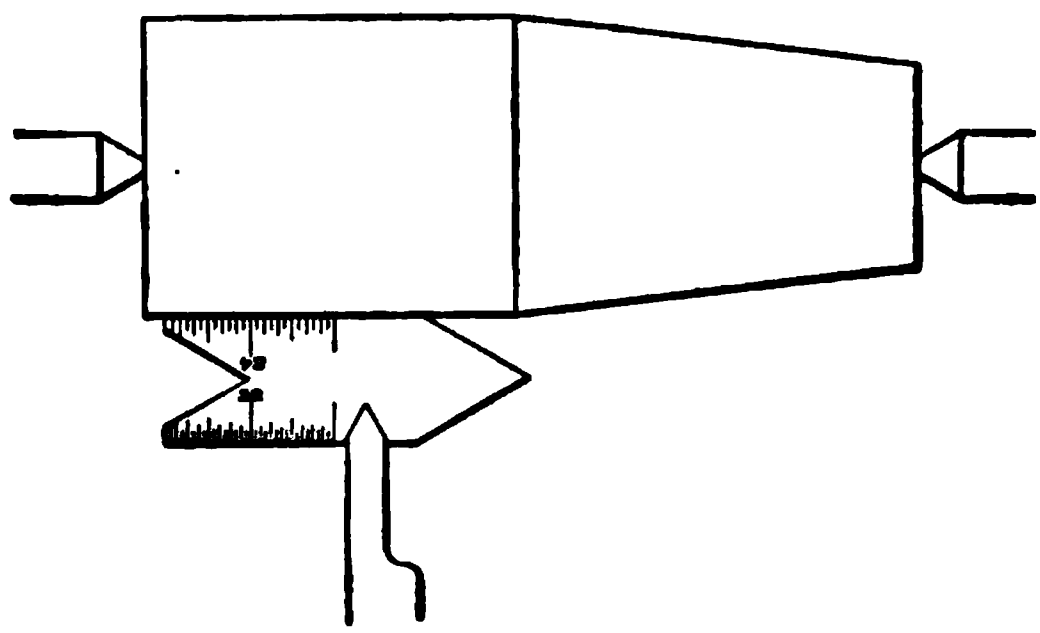

FIG. 18.

the work so that its back is parallel to its axis and the tool is set the same as for parallel thread cutting, as shown in Fig. 18.

25. Error in Pitch Due to Setting Over the Tail-Center.—If the center is set over, it will give an incorrect pitch, and also an incorrect thread. This point will be taken up later, under the head of "Errors in Lathe Work."

If a taper thread is cut by setting over the tailstock, the pitch of the thread will not agree with the pitch that would be cut by the use of the taper attachment. Suppose we have the tapered piece, Fig. 19, to be threaded. The piece is 2 inches long and should have a thread of 10 pitch. This means that for 10 revolutions of the piece, the tool would

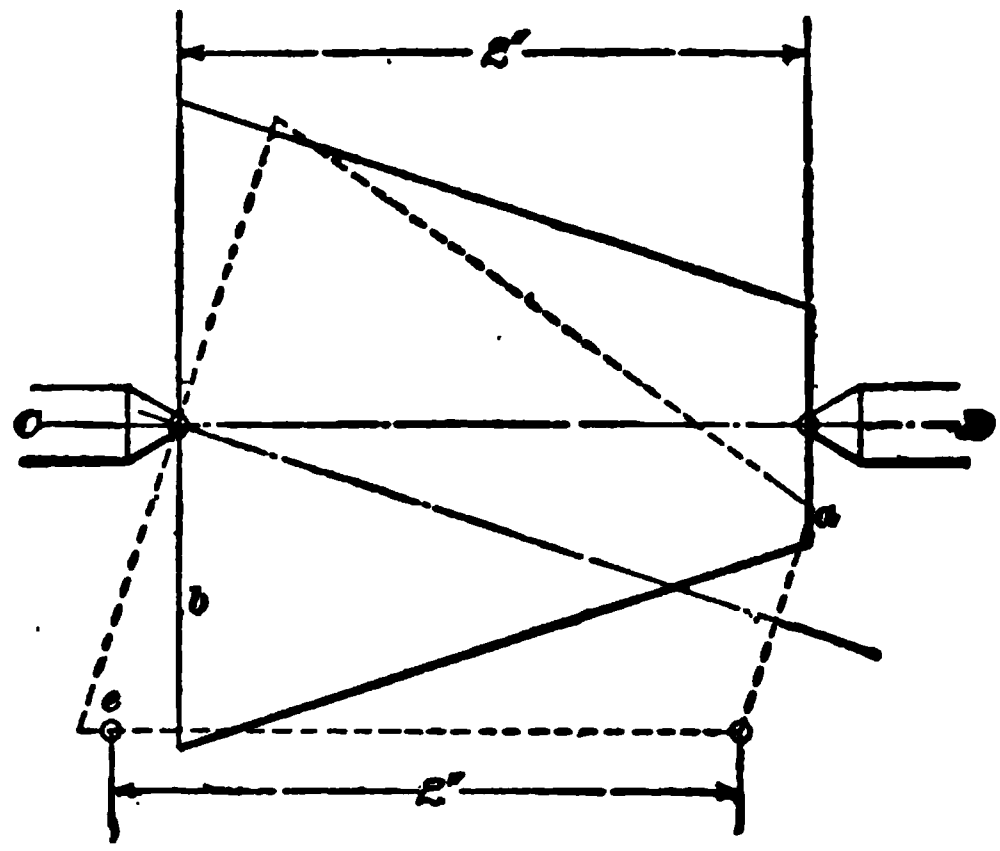

FIG. 19.

advance 1 inch, and, to advance 2 inches, it would require 20 revolutions; therefore there should be 20 threads on the piece. When the taper attachment is used and the lathe is properly geared, this result will be obtained. The tool will start at the end *a*, and, after 20 revolutions of the work, will have moved 2 inches sidewise, which will bring it to the end *b*, the carriage moving in a direction parallel to the line *CD*.

26. When the dead center is set over, the tapered piece will take the position shown by the dotted lines. The threading tool will move along parallel to the face of the work and also parallel to the center line *CD*. If the cut is started at the end *a* as before, 20 revolutions of the work will move the tool along the face of the work 2 inches, to the point *e*. It will be seen that there remains a part unthreaded, since the taper measured on the slope is greater than the true length of the piece measured parallel with its

axis. It will therefore require more than 20 turns to carry the thread to the end of the piece; consequently, there will be more than 20 threads on the piece.

Thus, it may be seen that the pitch of the thread on a tapered piece depends on whether it was cut by setting over the center or by the use of a taper attachment. Tapered threads should be cut with a taper attachment whenever possible.

SPECIAL THREADING TOOL.

27. A threading tool, Fig. 20, by means of which many of the difficulties in screw cutting that have been mentioned may be overcome, has recently been placed upon the market.

FIG. 20.

It consists of a cutter *a*, resembling a milling cutter, supported upon a bracket *b* by a slide *c*. The device is clamped upon the tool rest of a lathe from which the tool post has previously been removed.

The cutter *a* has 10 teeth on its circumference, each one of which is formed to cut deeper than the preceding one, and gives the thread its actual width to the full depth of the cut. For instance, in Fig. 21, the first tooth cuts the full width of the thread to the line *1*, the second cuts to the line *2*, and so on until the tenth tooth cuts to the bottom. In Fig. 22, (*a*), (*b*), (*c*), (*d*), (*e*), and (*f*) show the shape of the teeth and the corresponding forms of the thread for the first, second, third, fifth, eighth, and tenth cuts, two and one-half times the actual size of a 7-pitch V thread.

FIG. 21.

28. The tool is set up and adjusted for the first cut, as shown in Fig. 20, proper side rake for either right-hand or

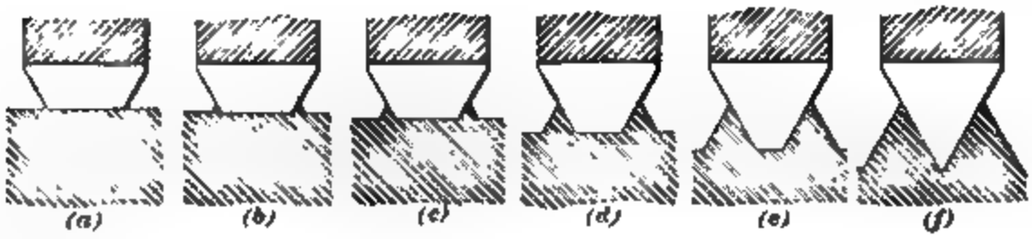

FIG. 22.

left-hand thread being given by means of an adjusting screw on the far side of the device, which is not shown. The tooth rests upon the support *d*, which holds the top face level with the center line of the screw. When all adjustments have been made, both the device and the rest are clamped, and the first cut is taken. The rest is then brought back to its starting point in the usual way. The second tooth is brought into position and locked by throwing over the lever *e* and bringing it back into place. The second cut is then taken, and the operation repeated until the tenth tooth has taken its cut. The last tooth may be advanced in 9 steps by means of an eccentric stud and micrometer stop. Each step advances the cutter a fraction of a thousandth of an inch, thus permitting very fine fits and exact duplicates to be made.

The special advantage claimed for this tool is that each tooth comes to the work in better condition than when a single tool is used, the work being distributed over 10 cutting edges instead of 1. The finishing tool comes into service with a sharp point, while its duty is comparatively light. Under these conditions, the lathe can be run at a higher speed, since the danger of injuring the tool point by its continuous use on every cut has been eliminated. A perfect thread can, therefore, be formed in less time without injury to the tool. For rough work many shops prefer the ordinary single tool, the thread being finished with six or seven cuts.

THEORY OF CUTTING TOOLS.

DISCUSSION OF CUTTING PROPERTIES OF TOOLS.

29. Theory of Cutting Tools Applied to Hand Tools.—In discussing a cutting tool from a theoretical standpoint, attention will first be given to that part known

(b)

FIG. 23.

as the **cutting wedge,** which enters the work and severs or removes a part known as the **shaving.**

The cutting qualities of a tool are governed largely by the shape of the cutting point or cutting edge. We can best understand the first principles if we consider the action of a chisel when cutting a block of wood. If we place a chisel in the center of a block, as shown in Fig. 23, and apply pressure as indicated by the arrow, the chisel will be forced into the block, bending each side out equally until the block splits. The force required to press the tool into the work will depend on the strength of the block and the angle *a* of the cutting wedge. If we have two blocks (*a*) and (*b*), Fig. 23, of the same strength, it can easily be proved by the laws of physics that it requires more power to force the blunt wedge *b* into the work than the more acute one *a*.

30. Fig. 24 (*a*) represents a chisel cutting a block. The edge of the chisel is ground to an acute angle *a* the same as the wedge in Fig. 23 (*a*). Fig. 24 (*b*) represents a similar block, being similarly cut with a tool ground with a blunt cutting edge, the cutting angle *b* being equal to the angle of

(a) (b)

FIG 24.

the wedge *b*, Fig. 23 (*b*). In estimating the force necessary to push each of the tools along its cut, it will be seen that the blunt tool will require the greater force, as the blunt wedge, Fig. 23 (*b*), required the greater force to push it into the block. In Fig. 24 (*a*) the shaving is forced from the

block and slightly bent away, while in Fig. 24 (*b*) the shaving is very much bent and broken. This bending and breaking of the shaving at the time of severing it from the block absorbs an extra amount of power. The direction of the force required to turn the shaving is represented graphically by drawing a line at right angles to the cutting face of the tool. In Fig. 24 (*a*) the pressure on the face of the tool is

(a) (b)

FIG. 25.

in the direction of the arrow *c*. The intensity of the pressure varies with the thickness of the shaving. This force tends to hold the tool very close to the work, and, if it were not for the broad flat face of the tool, it would be pressed deeper into the work. If the angle of the tool be changed, as in Fig. 25 (*a*), so that the face of the tool *f* does not touch the work except along its cutting edge *e*, the pressure of the shaving would be sufficient to force the tool into the work so that as the tool moved along it would cut in the direction of the dotted line.

31. In Fig. 24 (*b*), in which the tool is very blunt, the result of this pressure against the tool is quite different. The direction of the pressure of the shaving is at right angles to the face of the tool, as shown by the arrow *c*. If we divide this force into two forces, one acting against the

direction of tool motion and the other at right angles to it, tending to hold the tool into the cut, we will find the greater force exerted against the direction of tool motion and but little pressure tending to hold the tool against the work. If the tool were made square on the end, as shown in Fig. 26, the force tending to hold the tool against the cut would be entirely eliminated, and the cutting action would be changed from a shaving to a scraping action.

In these hand tools, which are free to move in their natural directions, governed by the angle of the faces, it will be noticed that the tool is guided by one of its cutting faces sliding upon the heavier part of the work, while the other cutting face bends the shaving out of its place.

FIG. 26.

32. Theory of Cutting Tools Applied to Machine Tools.—It has been shown that, of the two tools illustrated in Fig. 24, less power is required to force the tool with the acute angle *a* than is necessary to force the tool with the blunter cutting edge *b*. This was true when the tools were free to follow in their natural courses. When the tool is rigidly held in some position and forced to cut along some other line than its natural one, the condition becomes very much changed, and the power required varies accordingly. Suppose the tool with the acute cutting angle shown in Fig. 24 (*a*) be presented to the work as shown in Fig. 25 (*b*), so that its cutting face makes the same angle *b* as the cutting face of the tool shown in Fig. 24 (*b*). If this tool be rigidly held at this angle and forced along the work in the direction of the arrow *d*, it will be found that for equal depths of cuts the same amount of power will be required to move it as in the case of the tool shown in Fig. 24 (*b*). From this it may be seen that if a tool is clamped in any position and moved along

a certain line of motion, the cutting action depends as much on the position it holds relative to the work as on its exact shape.

33. Angles of Clearance and Keenness.—If we consider the strength of the two tools shown in Figs. 24 (*b*) and 25 (*b*), it can readily be seen that the tool shown in Fig. 24 (*b*) is much the stronger because of the greater support given to the cutting edge. In Fig. 25 (*b*) the cutting edge has very little backing or support, and it would break at once. When this tool is held and moved as shown in Fig. 24 (*a*), it is in its strongest position. When it is moved so that its face makes an angle with the work, its strength begins to decrease as the angle *c*, Fig. 25 (*b*), increases. This angle *c*, which the back face of the tool makes with the work, is called the **angle of clearance.**

If the tool in Fig. 24 (*a*), which is held in its strongest position, is compared with the tool shown in Fig. 24 (*b*), it will be seen that the latter is the stronger. This strength is due to the support given to the cutting edge because of its bluntness. The angle between the cutting faces of a tool, *a*, Fig. 24 (*a*), and *b*, Fig. 24 (*b*), is called the **angle of keenness** of the tool. The strength of a cutting tool, therefore, depends on the angle of clearance and the angle of keenness. The angle of keenness of a tool should vary with the degree of hardness of the material to be cut. For turning soft woods, the turning tools are ground very keen, or so that the cutting faces make a very acute angle with each other. In turning metals, the cutting edges are made less keen, depending on the hardness of the metal. In some cases, such as turning chilled cast-iron rolls, the angle formed by the cutting edges is nearly 90°.

34. Angles of Rake and Keenness.—Fig. 27 shows a diamond point with lines drawn to indicate its angles of rake and keenness. *A B* is drawn through point *O*, parallel to the base of the tool. *C D* is perpendicular to *A B* at *O*. *E F* is parallel to the top face of the tool at *O*. *H K* is parallel to the front edge of the tool at *O*. Angle *A O E*

represents the angle of top front rake of the tool. Angle *D O H* represents the angle of front rake. Angle *E O H* represents the angle of keenness.

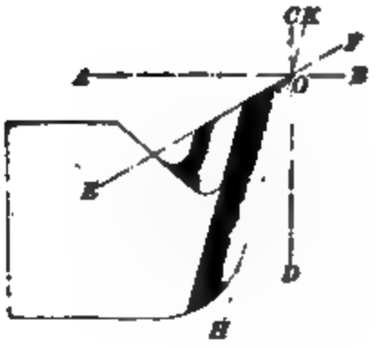

FIG. 27.

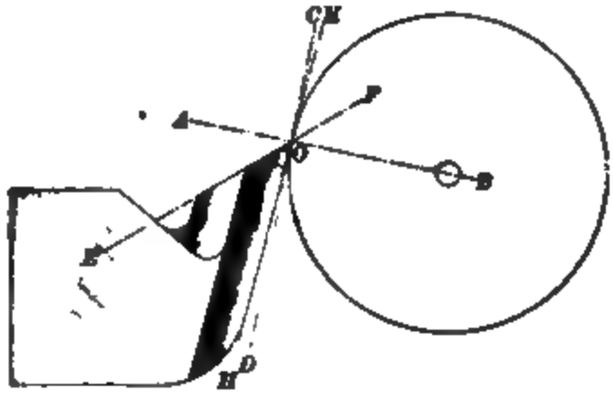

FIG. 28.

These angles as here described refer to the tool alone. When the tool is clamped in the tool post and presented to the work to take a cut, these angles assume a new relation to each other, and the cutting qualities of the tool depend on these new relations. Fig. 28 shows the tool properly set for cylindrical turning.

35. Angles of Rake and Keenness of Lathe Tools When Applied to Work. — To properly measure the angles of the tool thus set, draw the line *A B* from the center of the work through the point of the tool. Draw *C D* perpendicular to *A B* at *O*. Draw *E F* parallel to the top face of the tool through the point *O*. Draw *H K* parallel to the edge of the tool. Angle *A O E* equals the top rake of the tool. Angle *E O D* equals the effective keenness. Angle *D O H* equals the angle of clearance.

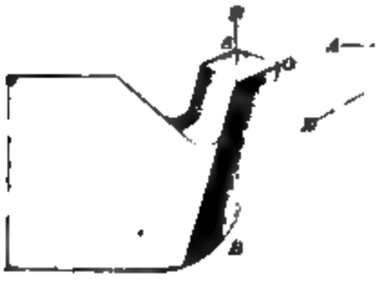

FIG. 29.

It will be noted that the difference in drawing the lines in Fig. 27 and Fig. 28 begins with drawing the line *A B*. After this line is properly drawn, the other lines follow in the same course. When the top face of the tool is ground sloping from one

side, as shown in Fig. 29, the tool has top side rake. The angle of top side rake is measured by drawing *A B* parallel to the base of the tool through the point *S*, and *E F* parallel to the top face of tool through the point *S*. Angle *A S E* is the angle of top side rake.

CONDITIONS THAT GOVERN THE SHAPE OF THE TOOL.

36. General Statement.—These effective angles of rake, clearance, and keenness depend on (1) *kind of metal being cut;* (2) *hardness of metal;* (3) *character of cut*, whether *roughing* or *finishing;* and (4) *particular manner in which the tool is set when presented to the work.*

37. Effect of Kind of Metal Being Cut Upon Shape of Tool. — This matter will be more thoroughly taken up later, but, in general, it may be stated that for soft material, such as mild steel, the angles are keener than for hard material, such as chilled cast iron, while for some materials that have a tendency to draw the tool in, as brass or copper, the angles may be made very blunt indeed—in fact, a negative rake is often given them.

38. Hardness of Metal. — As before stated, the angle of keenness varies with the hardness of the material. Tools for cutting soft steel should be ground with sufficient keenness to enable them to turn long, curly shavings. The character of the shaving indicates much regarding the cutting of the tool. When the shavings come off in large curls and are very strong, it indicates that the tool is properly ground and set in the machine. When the shavings come from the work broken in small pieces, it indicates that the tool is laboring because of incorrect setting in the machine or incorrect grinding. A word of caution should be given here to those who, for the first time, experience the delight of seeing a tool, properly ground and set, roll off a beautifully curled shaving. Never attempt to remove the shaving from the work by taking it

in the hand and pulling or jerking it. A good steel shaving is very strong and its edges are as keen as any knife. The danger is that the shaving will slip through the hand, cutting away the flesh in a most painful way. To remove the shaving from the cut, throw out the feed and the tool will cut the shaving off.

39. Roughing or Finishing Cuts.—The angle of top rake depends on the nature of the cut, whether roughing or finishing. Fig. 30 shows a piece of work with the tool set to take a heavy **roughing cut.** Here the cutting is done

FIG. 30.

along the edge *O S* of the tool, the point *O* doing a very small part of the work. It is evident that this tool should be ground to give keenness all along the edge *O S*. This is done by giving the tool top side rake.

When the tool is used for a **finishing cut,** the cut is not deep, and most of the cutting is done with the point of the tool *O*. In this case, top front rake, as shown in Fig. 28, should be given. Top side rake and top front rake are governed also by the rate of feed used.

40. Fig. 31 illustrates a case in which the feed is coarse and the tool point broad, so that the rate of feed per revolution of the work is greater than the depth of cut. In such

a case, the top front rake should exceed the top side rake. When the feed is fine compared with the depth of cut, the top side rake should be the greater.

41. Manner in Which Tool Is Presented to Work. The **shape** or **width** of the point of a tool depends on the feed used, and this depends on the nature of the work. In finishing small rods, shafts, or spindles that should be very true, the roughing cut is made deep with as coarse feed as the work and the tool will stand, while the finishing cut is light and the feed comparatively fine. This fine feed is allowable because it cuts the work very true, and on small work the tool will quickly feed over it and remain sharp up to the end of the cut. On large work, the method is different. Deep, heavy roughing cuts are taken, as before, but the finishing cut is taken with a tool that has a broad, flat point and a very coarse feed. When the work is heavy, this form of tool can be used and will turn comparatively true, while on slender work, a broad-nosed tool could not be used at all. When it is possible to use a broad-nosed tool for finishing, it should be done. It saves much time because of the coarse feed that can be used, and the tool will usually remain sharp until the end of the cut, unless it is a long one.

FIG. 31.

42. Change of Front Top Rake to Side Top Rake.—The angle of top rake may be effectively changed

(a) FIG. 32. (b)

from front top rake to side top rake by changing the angle of the tool with the work. Fig. 32 (*a*) shows a broad-nosed finishing tool ground with top front rake. This may be

changed to a very efficient roughing tool with top side rake, by swinging it in the tool post so that it has the position shown in Fig. 32 (*b*).

Special care should be taken when using a tool set in the manner shown in Fig. 32 (*b*), as if it becomes loose in the tool post it will swing into the work and may do great damage. It is always best to have the tool post in advance of the point at which the tool is cutting so that the tool will rotate away from the work if it becomes loose in the tool post. When working upon expensive material, the tool should never be set as shown in Fig. 32 (*b*), but a regular roughing tool, such as will be described later, should be employed.

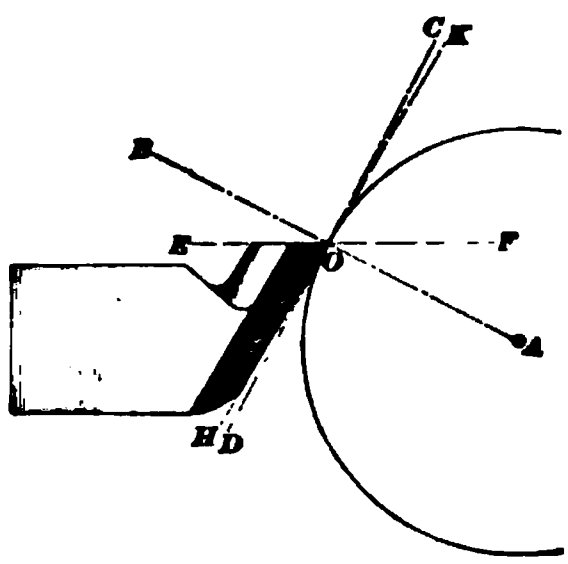

FIG. 33.

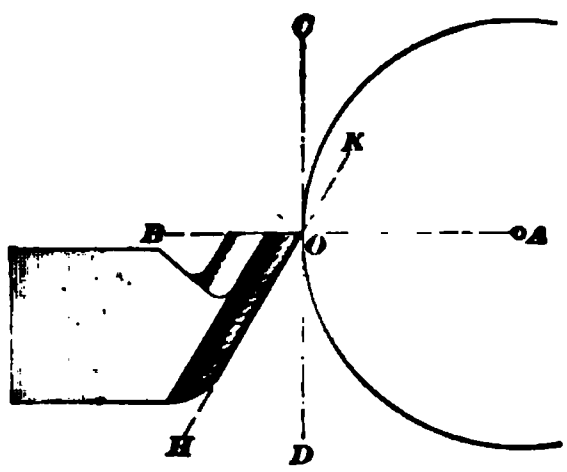

FIG. 34.

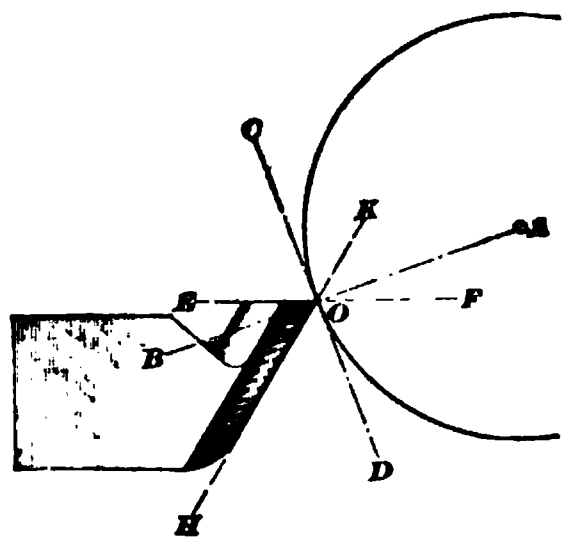

FIG. 35.

43. Effect of Height of Tool on Angles of Rake and Clearance.—It is well to study the effect of setting the tool at different heights, so that any difficulty from this cause may be recognized and remedied.

Fig. 33 shows a tool ground flat on its top face so that according to Fig. 27 it is without top rake. By applying this tool at its highest possible cutting position, and drawing the lines as in Fig. 27, we have an effective angle of top rake *E O B*, and an effective angle of keenness *E O D*. Suppose this same tool is next lowered to a position shown in Fig. 34, the point of the tool being level with the axis of the work. By drawing the lines as before, we find that the line *A B* coincides with the line *E F*, so that the tool has no effective top rake, and the effective angle of

keenness *B O D* is equal to 90°. At this point, the cutting action changes from a shaving to a scraping action, which can never admit of a deep cut. Next, suppose the tool to be set below the center, as shown in Fig. 35. By drawing the lines as before we will find that *A B* passes into the tool below the line *E F*. In this position, the tool has a negative angle of top rake *E O B* and would do little more than scrape the work.

44. Effect of Height of Tool on Its Strength.—The effect of the position of a tool upon its strength can also be seen from Figs. 33, 34, and 35. In Fig. 33 the angle of clearance *D O H* is very small and the cutting edge is well supported; consequently, the tool is in its strongest position. In Fig. 35 the angle of clearance *D O H* is great, and it is easy to see that the cutting edge cannot endure much pressure. From this it will be seen that a tool is strongest when set as high as possible upon the work.

SIDE RAKE OF SIDE TOOLS.

45. Determining Clearance Angle for a Side Tool.—In the case of side tools, as shown in Fig. 24, *Lathe Work*, Part 1, the angle that the side face of the tool *A B* makes with the end of the work or with the line *C D* drawn parallel to the end of the work, is called **side rake.** In theory, this angle of side rake or clearance should vary to suit every diameter of work and every amount of feed. Having given a rate of feed per revolution of work and a given diameter, the exact angle of clearance can be estimated.

Suppose we have a side tool, with its edge ground straight, set to the work as shown in Fig. 33, Part 1, and we wish to find the necessary angle of clearance at points *a*, *b*, and *c* along its cutting edge, which will allow it to feed in the direction of the arrow at the rate of $\frac{1}{4}$ inch per revolution. It is assumed to be understood that if the side tool were

flat or had no clearance, it could not cut, since it would simply lie flat against the work.

46. To estimate the angle of clearance for point *a*, draw a line *A B*, Fig. 36, equal to the circumference of the work at point *a*. At *B* erect a perpendicular and lay off *B F* ($\frac{1}{4}$ inch) from *B* equal to the desired feed per revolution. Draw a line through *A F*. The angle *B A F* indicates the required angle of clearance for this point of the tool. To find the correct angle of clearance for point *b*, lay off from *A* a distance *A C* equal to the circumference of the work at *b*; at point *C* erect a perpendicular and lay off a distance *C F'* equal to the desired feed. Draw *A F'*. Angle *F'A C* represents the necessary angle for the tool at point *b*. To find the angle for point *c*, proceed as before, laying off *A D* equal to the circumference of the work at point *c*. Angle *F''A D* will represent the necessary angle at this point. It will be observed that the angle of clearance changes for each of these points, increasing as it approaches the point of the tool or the center of the work. The correct shape for this face of the tool would be a warped surface with little clearance at the heel of the tool *a*, but with considerable clearance at the point.

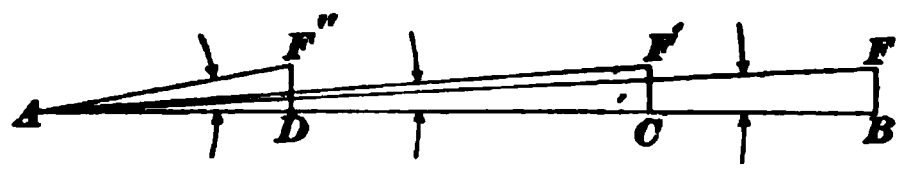

FIG. 36.

In practice, however, the tools are ground nearly flat, with sufficient clearance at the point of the tool to let it cut, and the rest of the cutting edge will have excessive clearance, but not enough to cause any serious objection.

TOOLS FOR BRASS WORK.

47. Shape and Setting of Tools for Brass Work.— The theory of the shapes of tools and the methods of applying them to the work, as just described, do not seem to be sustained in all cases when applied to tools for brass. This is due largely to the peculiar nature of brass

found in its toughness and its flexibility. These qualities tend to cause a tool to spring into the work and the work to spring over the tool in such a way as to make very untrue cuts. If the work and the tool could be held with sufficient rigidity to avoid all danger of springing, the tool could be ground with more keenness than is allowable for iron or steel. In practice, it is found that the best results are obtained when the tool is ground and set as shown in Fig. 34. This is ground without top rake and set at the center of the work. Other shapes of tools are used for brass, which will be discussed later, but, in most cases, the cutting angles remain as here indicated.

BORING TOOLS.

48. Working Conditions of Boring Tools.—The conditions under which a boring tool must work are most unfavorable for carrying out the principles that naturally lead to good results. The boring tool, because of the long slim arm required to reach into the bottom of small holes, lacks that rigidity of cutting edge that is essential in rapid accurate work.

49. Cutting Angles of Boring Tools.—By reference to Fig. 37, it will be found that the angles of rake and keenness for a boring tool may be defined the same as in a diamond point. The line *A B* is drawn from the axis of the work through the point of the tool; *E F* is drawn along the top face of the tool through the point *O*. The angle *B O F* represents the angle of top rake. If the tool be raised or lowered in the hole, the angle of top rake will vary, as shown in Figs. 33, 34, and 35.

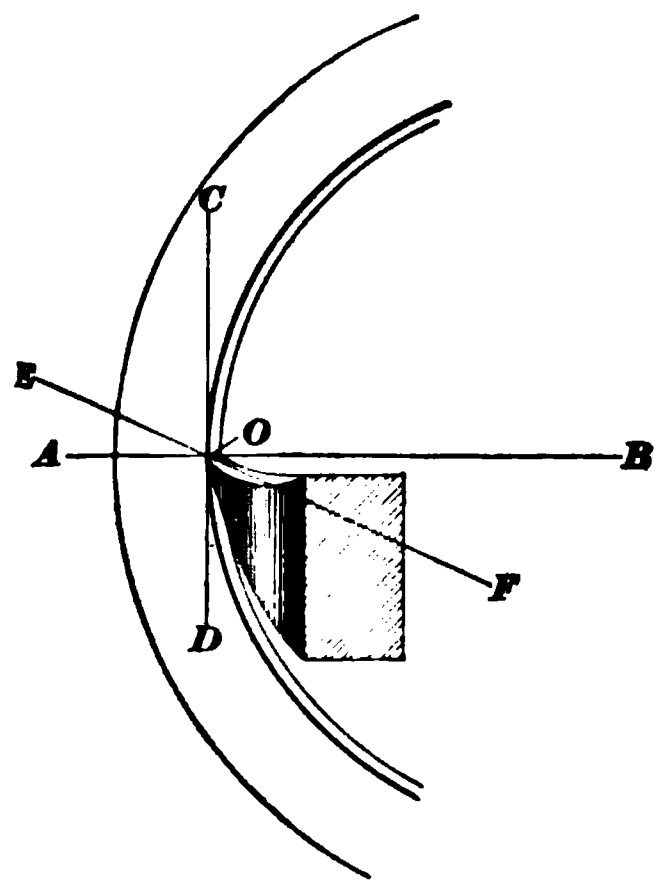

FIG. 37.

50. Spring of Boring Tools.—The force necessary to hold the point of the tool up to the cut depends largely on the shape of the point. Fig. 38 (*a*) shows a well-shaped tool for small work. The point is narrow and is shaped much the same as the point of a diamond-pointed tool. The force tending to spring the tool away from the work is in the direction of the arrow, at right angles to the line *A B*. Fig. 38 (*b*) shows a tool with the point more rounded, with the force tending to spring it away from the work more at right angles to the shank of the tool. Fig. 38 (*c*) shows a broad-nosed tool with the force acting squarely across the shank of the tool. This form of tool would chatter and spring away from the work so that it would be difficult to do much with it. Single-pointed boring tools as here shown should have narrow points, as shown by Fig. 38 (*a*), and should be used with moderately fine feeds. When broad-edged boring tools are used with very coarse feeds, they are held in boring bars or heads, or in some other way than here mentioned.

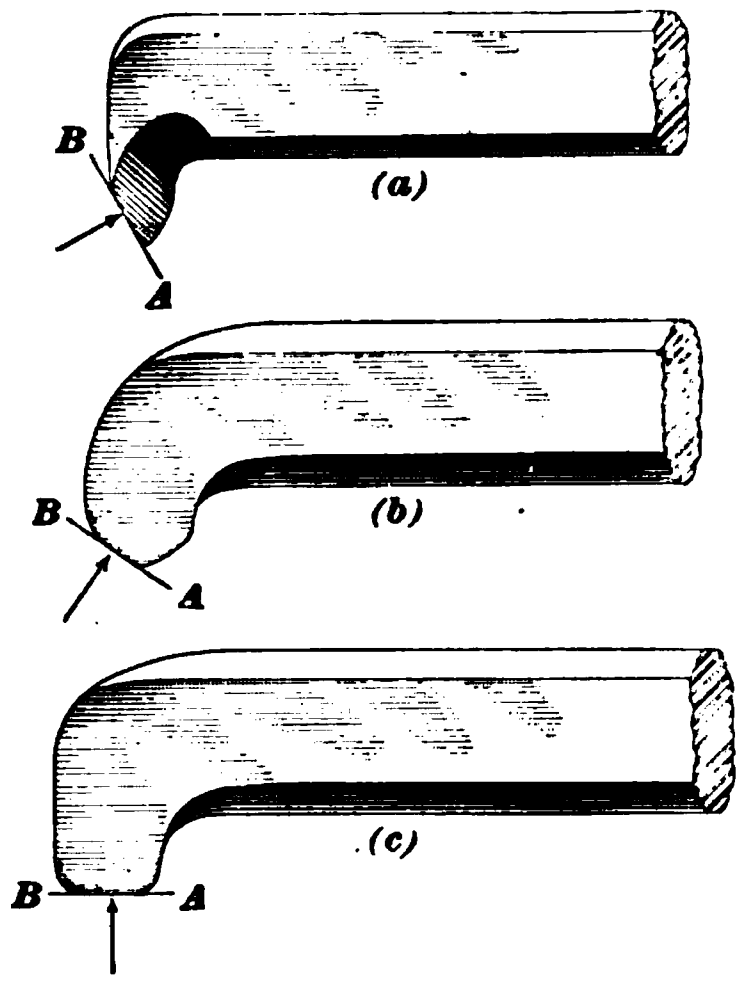

FIG. 38.

51. Height of Boring Tools.—The correct height of the boring tool in the work, to give it the strongest and the easiest cutting position, is as much *below* the center as it can be set and still have its cutting point cut. This is for the same reason that the diamond point is set *above* the center of the work. It is not always safe to set the tool in this low position, if the tool is long or springy; for, being below the center, if the tool should catch and spring down, it would spring into the work more deeply and cause

trouble. Ordinarily, a boring tool is set at about the center of the work, it having been ground so that when thus set it will have but little clearance.

52. Boring Small Holes.—When the hole is small, the conditions are more unfavorable. Fig. 39 shows a section through work with the tool in place. The tool nearly fills the hole. When a line *A B* is drawn from the center through the point *O*, it passes into the tool, showing that in this position it has negative top rake. The best that can be done in this case is to grind the top face back from the edge *E*, giving the tool a great deal of *top side* rake.

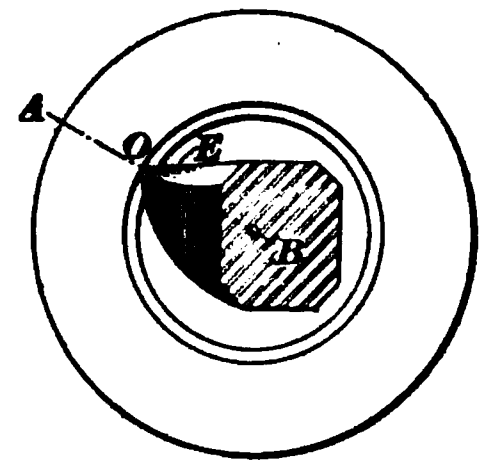

FIG. 39.

FORMS OF CUTTING TOOLS.

FORGED TURNING TOOLS.

53. Diamond-Pointed Tool.—Thus far, the **forged diamond-pointed tool** has been the principal tool considered for cylindrical turning. This has been done because the principles that have been shown to govern its cutting actions are applied in the same way to other forms of tools, and the similarity of cutting edges will be apparent.

54. Self-Hardening Steel.—During the last few years, specially prepared self-hardening or air-hardening steel has taken a leading place in the making of lathe and planer tools. This steel is so treated in manufacturing that it does not require heating and hardening, as does the ordinary tool steel. By heating it to a dull-red color and allowing it to cool in the open air or in a blast of air, it is made extra hard. If this kind of steel be plunged into water while it is hot, it cracks, which spoils the tool.

Among the advantages of self-hardening steel are: *First*, its hardness will enable it to hold a sharp edge when cutting

very hard material, such as hard castings, castings with a heavy scale, steel castings, or similar work. *Second*, since its hardness is little affected by heat, it is possible to run the work much faster or at a higher rate of cutting speed than is possible with the ordinary tool-steel tool. On account of these facts, it is used almost universally in many shops.

The objections that are raised against self-hardening steel are that it is difficult to forge and that it is expensive, costing about four times as much per pound as ordinary tool steel.

55. Shapes of Forged Roughing Tools.—In forging self-hardening steel, it can only be worked at a low heat, and it is very difficult to draw or bend it into such a shaped tool as shown in Fig. 27. It is usually heated and cut with a hot chisel approximately to shape, with little forging or bending, and is finally shaped on the grinding wheel. Fig. 40 shows an elevation and plan of a front tool as forged from this kind of steel. The

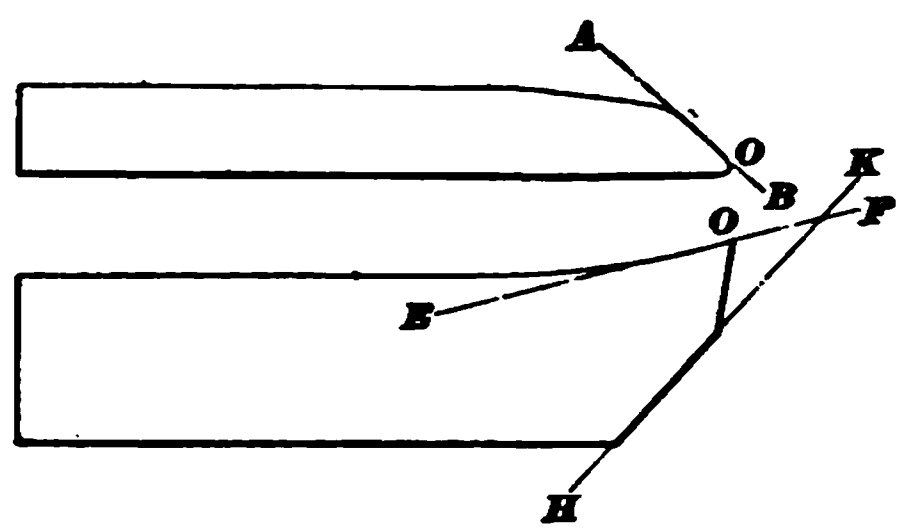

FIG. 40.

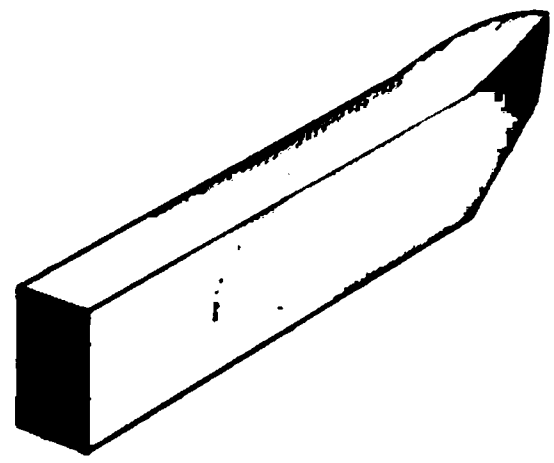
FIG. 41.

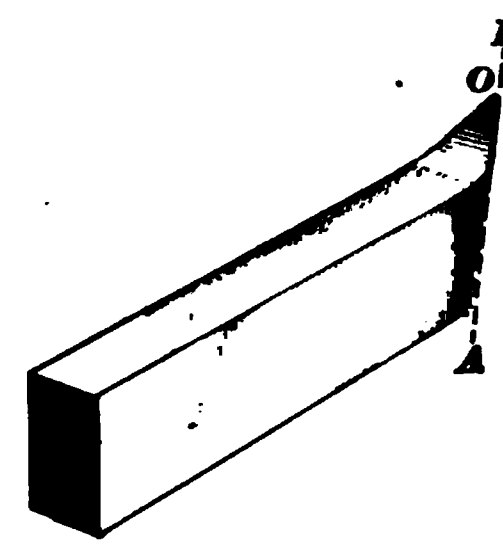

FIG. 42.

side *A B* has been trimmed off to make the cutting edge, the point *O* bent up to give top rake along the line *E F*, and the heel cut off along the line *H K*, so that little

grinding will be required on the front end of the tool. When the tool is ground, it appears as shown in Fig. 41. This tool will be seen to possess the same cutting angles as shown in Fig. 27, although it is quite different in general appearance. Since the point *O* is at one side, its cutting edge is entirely along the edge *A B*. This designates it as a *right-hand tool* in contrast with one beveled, as shown in Fig. 42, which would be called a *left-hand tool.* The ordinary diamond point, with the point in the center and ground without top front rake, may be used to cut in either direction. If ground with top side rake, as shown in Fig. 29, to cut toward the live center, it is called a *right-hand diamond point;* if ground sloping the other way, it is called a *left-hand diamond point.*

56. When heavy cuts and great strength are required, the outline of the cutting edge is curved and the point considerably rounded. This applies particularly to heavy work.

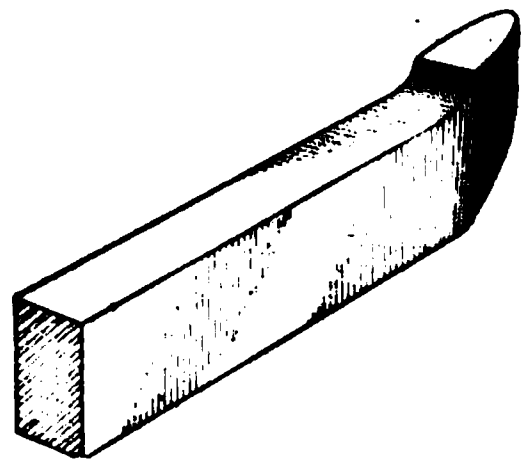

FIG. 43.

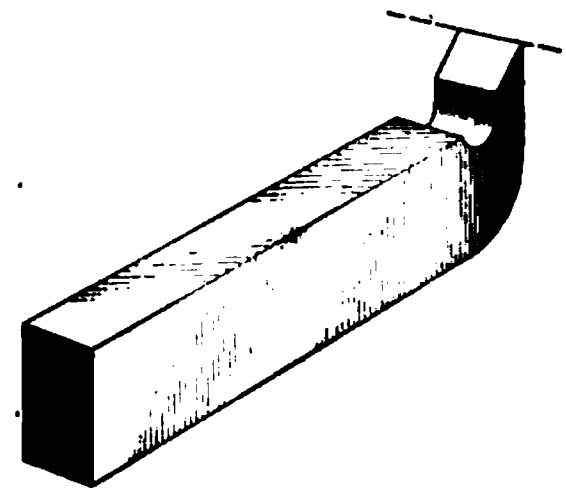

FIG. 44.

Fig. 43 shows a form of round nose used for some kinds of heavy work. Fig. 44 shows a broad-nosed tool used for finishing when coarse feeds are permissible.

57. Proper Form for Round-Nosed Tools. — For some kinds of work, a **round-nosed tool,** shown in Fig. 45, is used. This is ground round on its point, and top rake is sometimes given by grinding a notch *a* on the top face, as shown. Grinding the top face of a tool in this way is not good practice, as it soon spoils the shape. If a tool is to be given top rake, it should be so forged that the top rake can

easily be ground without forming a notch *a* on the tool. Fig. 46 shows how such a tool should be forged. This

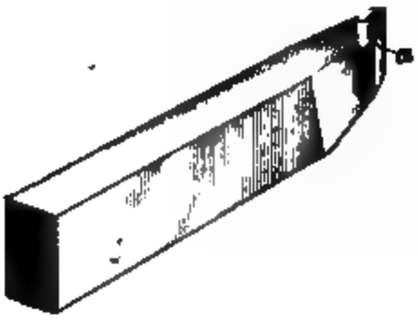

FIG. 45.

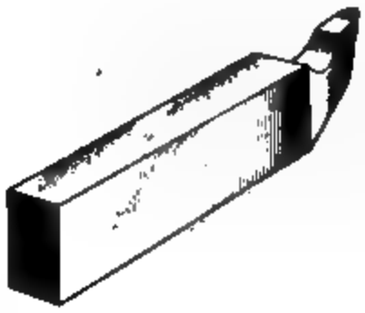

FIG. 46.

style of forging gives opportunity to grind the top face of the tool and keep the angles and shapes constant. Fig. 47

FIG. 47.

shows a piece of work of such shape that this form of tool is desirable, since it can be set to finish the faces *a* and *b* at the same setting. When top side rake is desired, it should be given by setting the tool at an angle to the work, as shown in Fig. 32 (*b*), or by grinding the tool as shown in Fig. 48, but never allowing a corner or notch to be formed as shown in Fig. 45.

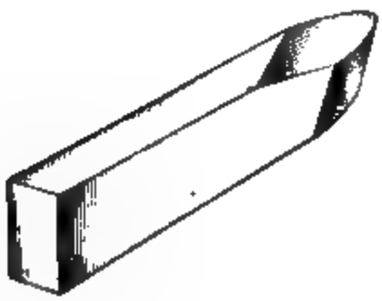

FIG. 48.

TOOL HOLDERS FOR TURNING TOOLS.

58. Advantages of Tool Holders.—The expense of keeping up a stock of tools forged from the bar, whether of ordinary tool steel or of special self-hardening steel, is great, and this fact has led to the devising of many forms of holders employing small blades of steel to do the cutting. The holder is made the same size as the shank of the ordinary forged tool. They make a very great saving in the cost of the steel used, as one holder will be sufficient for a great variety of shapes of cutting points, tools, or blades. The blades may be of the very finest and most expensive quality of steel and still cost far less than the forged tool.

59. Disadvantages of Tool Holders.—The objection to these inserted-blade tools or tool holders is that it is difficult to find a means of clamping the small blade in the holder so that it will have the same rigidity as the forged tool. The holders soon wear, allowing the blades to spring. This causes trouble. This is caused in many cases by using too small a holder to do the work. If heavy holders are used and comparatively large blades, the trouble will be partly avoided.

60. Diamond-Pointed Tool Holders.—Figs. 49 and 50 show two styles of diamond-pointed tool holders. The similarity of Fig. 50 to the regular forged diamond point is readily seen. In Fig. 49 the tool shown has the outline of a diamond point sketched over it in dotted lines. From this it will be seen that the shapes of the cutting edges are identical.

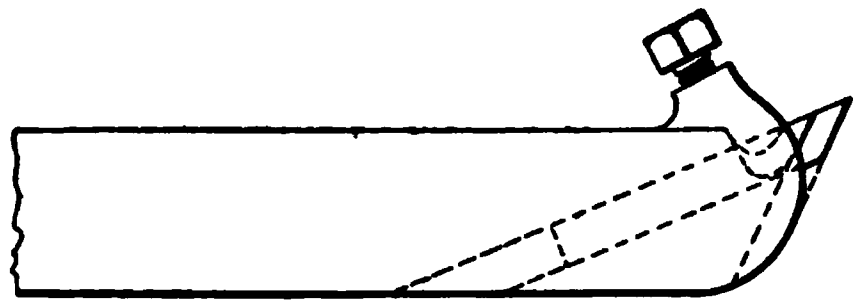

FIG. 49.

61. Grinding of Diamond-Pointed Inserted-Blade Tools.—The methods of grinding these two tools are quite different. In Fig. 50 the cutting tool is ground

entirely on its top face, which corresponds to the face *E F*, Fig. 27. This determines the angle of keenness, and since the angle of front rake remains unchanged in the tool, it is always set at the same height for a given diameter.

In Fig. 49 the angle of top rake of the tool is determined by the angle at which the tool sets in the holder. Grinding should be done entirely along the end of the blade which corresponds to the face *H K*, Fig. 27. In this case, if we wish to increase the keenness of the tool, we grind it away at the heel. It must be remembered, however, that the keenness given the tool by changing its angle of front rake will not change the effective keenness when applied to the work, unless the position of the tool is changed. Grinding away the heel makes it possible to set the point higher on the work. This higher position gives an increased angle of top rake and therefore increases the effective keenness. Other forms of tool holders are made that are similar to these and accomplish the same purpose.

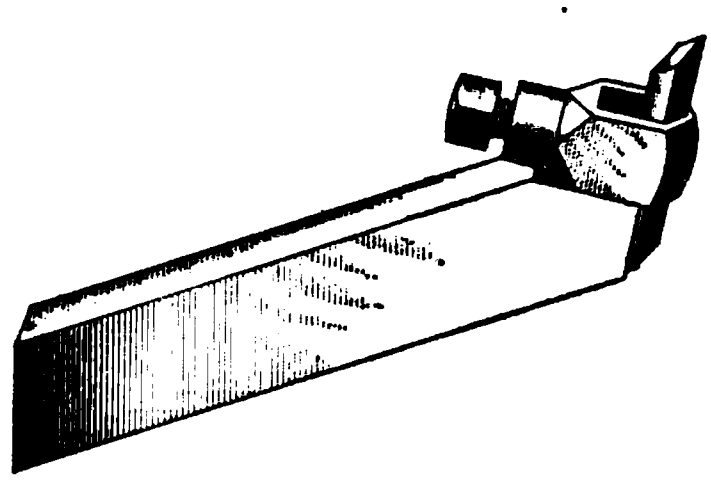

FIG. 50.

THE PARTING, OR CUTTING-OFF, TOOL.

62. Forged Parting Tool. — Fig. 51 represents a common form of parting tool. This tool is used for cutting grooves or notches in work, for cutting square corners, or for cutting off work held in a chuck. The cutting edge of the tool is along the line *A B*. The blade is forged and ground so that the cutting edge is the thickest part. The sides of the blade are each ground with a slight amount of clearance, as shown by section *C D* at (*b*). The tool is seldom ground with top rake, keenness being given by varying the angle of front rake and changing its height. When this tool is used as a cutting-off tool, its theoretical height is constantly changing as it approaches the center of the work,

and so it should be set at the same height as the center of the work.

63. Use of Parting Tool.—Work held between the centers should not be cut in two with this tool. Work may be partly cut in two if care is used, after which it should be

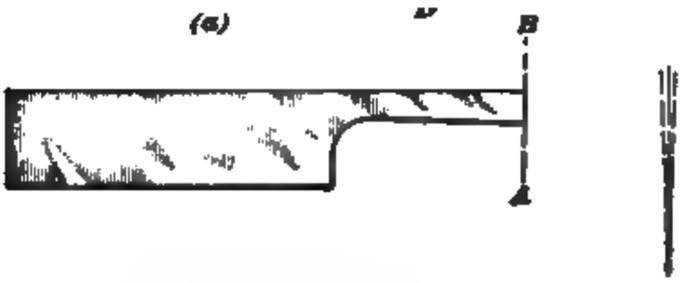

FIG. 51.

taken from the lathe and either broken or sawed apart. Fig. 52 shows the tool deep in a cut. Soon the piece will become so reduced in diameter that the force required to

FIG. 52.

take the cut will bend the work. By bending the work at this small diameter, it will open the notch on one side and close it on the other, so that the tool cannot pass through,

but will become jammed in the cut. This will result in either breaking the lathe tool, or the lathe center will be broken or torn out of the center hole.

64. Inserted-Blade Parting Tool.—Inserted-blade tool holders are very successfully used for parting tools. Fig. 53 shows one style of inserted-blade parting tool. The blade is held in the holder by the clamping screw *s* and is

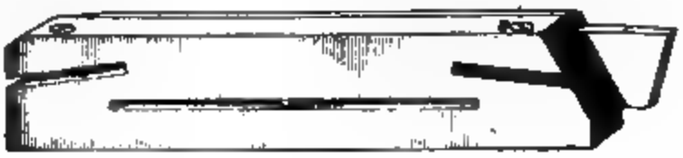

FIG. 53.

still further clamped when the tool holder is clamped in the tool post, because of the spring of the tool holder. Fig. 54 shows another form of bent parting tool with inserted blade. The blades for these tools are ground either concave on the

FIG. 54.

side or thinner on the bottom edge, to give clearance. They are made either from self-hardening steel or regular tool steel. When the blades are made from regular tool steel and hardened, it is customary to draw the temper along the lower edge, which gives the tool toughness—a quality much desired.

THREADING TOOLS.

65. Forged Threading Tools. — A good form of threading tool for V threads is shown in Fig. 60, *Lathe Work*, Part 2. This has an advantage over the common form shown in Fig. 55 in that it does not become thicker

each time it is ground. This constant thickness is a desirable feature when threads are to be cut very close to a shoulder.

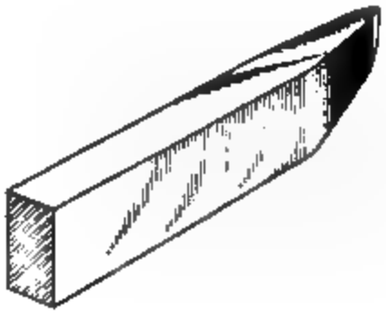

FIG. 55.

66. Inserted-Blade Threading Tools.—Various forms of tool holders have been designed for threading tools. Fig. 56 shows one of these forms for V threads. The tool is accurately made and ground so that the front faces form such an angle with each other when the top face is ground flat that the angle of the cutting edges will measure 60°. These inserted blades are sharpened by grinding the top face. Tool holders are made

FIG. 56.

for cutting square threads, blades of various thickness being used to cut the various pitches of threads. When coarse pitches on small diameters are to be cut, these tools cannot be used because of the excessive side rake required on tools used for this purpose.

BENT TOOLS.

67. Right-Hand or Left-Hand Tools.—For some kinds of work, the straight tools that have been described cannot be used, and a class of tools known as *bent tools* becomes necessary. These are classed as right-hand or left-hand tools, depending on the direction they are intended to cut.

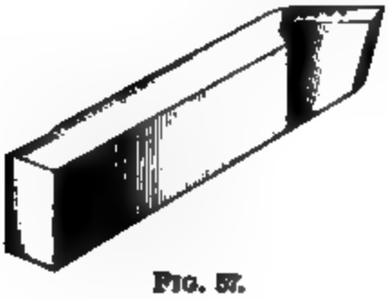

FIG. 57.

68. Bent Side Tool. — Fig. 57 shows a right-hand **bent side tool.** This form of tool is especially desirable when cutting a shoulder that is very close to the lathe dog, as shown in Fig. 58.

69. Bent Parting Tool.—When it is desired to cut work very close to a shoulder or the jaws of a chuck, a **bent**

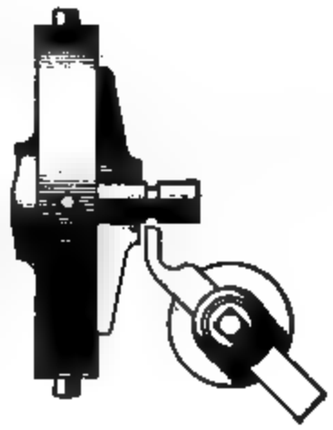

FIG. 58. FIG. 59.

parting tool may be used, as shown in Fig. 59. The form of tool shown in Fig. 54 is particularly well adapted to this class of work.

70. Bent Round-Nosed Tool. — Round-nosed tools may be bent either right or left, to meet certain conditions of work. The right-hand **bent round-nosed tool** is often used for facing, and it makes a good inside turning or boring tool.

BORING TOOLS.

71. Special Holders for Boring Tools.—For boring tools **special holders** with inserted blades are superior to forged tools. Fig. 60 shows a special boring tool that can be held in the tool post of the lathe. The blade is held in the end of the bar *b* by a cap *c*, which screws over the end of the bar. The bar *b* can be adjusted in the holder so that it will just pass through the work

Fig. 61 shows another form of boring tool with inserted blade. This form holds the bar *b* very rigidly in a special block bolted on the lathe tool block.

FIG. 60.

72. Advantages of Special Holders for Boring Tools.—Among the advantages of this type of tools, the following may be mentioned. When the holes to be bored are small, a bar that nearly fills the hole may be used. It

FIG. 61.

may be set to project beyond the holder just far enough to pass through the work. This gives the tool the greatest possible rigidity. Furthermore, because of the low position of the cutting tool, Fig. 62, the cutting action is

much better than could be obtained with the forged tool as ordinarily ground.

For heavy work, the style of bar shown in Fig. 60 has too much spring, hence the form shown in Fig. 61 should be employed. The lighter bar is very handy for small work. At times, the clamping block shown in Fig. 61 is split and secured to the tool block by two bolts. These bolts hold the block together as well as in place, and so secure the bar *b*.

FIG. 62.

FORMING TOOLS.

73. Under favorable conditions, it is possible to use a tool with a very broad cutting edge, 8 inches or more in width. These conditions are: rigidity of the work, rigidity of the tool, and power of the lathe.

When a piece is to be finished with a curved or irregular surface, as shown in Fig. 63, special tools can be made that save much time

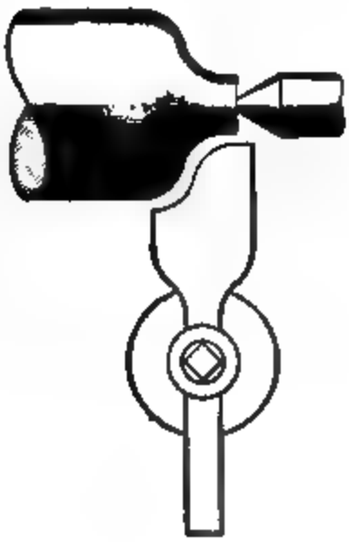

FIG. 63.

FIG. 64.

and do much better and more uniform work than can be done by hand. These tools are carefully made so that they

have the proper clearance along the line *G H*, Fig. 64, and should be sharpened by grinding entirely on the top face. When used, they should be set at the same height as the center of the work. On wrought iron or steel, a bountiful supply of lard oil should be used. Very complicated forms may be produced by the use of forming tools.

SPRING TOOLS.

74. Use of Spring Tools.—In most cases, rigidity of work and tool is sought for the purpose of producing the most accurate and the smoothest surfaces. In a few instances, the **spring** or elasticity of a tool is made use of to overcome a roughness of cut that cannot otherwise be avoided.

75. Forms of Spring Tools.—Fig. 65 shows a **spring tool,** or **gooseneck** tool, as it is sometimes called, applied to the work. The tool is set level with the center of the work. Any tendency on the part of the tool or the work to vibrate or chatter is taken up by the narrow springy part of the tool. It will be seen that this form of tool can never dig into the work, since the pressure of the cut is constantly tending to press the edge away in the direction of the arrow, in a circle described about the center *c*.

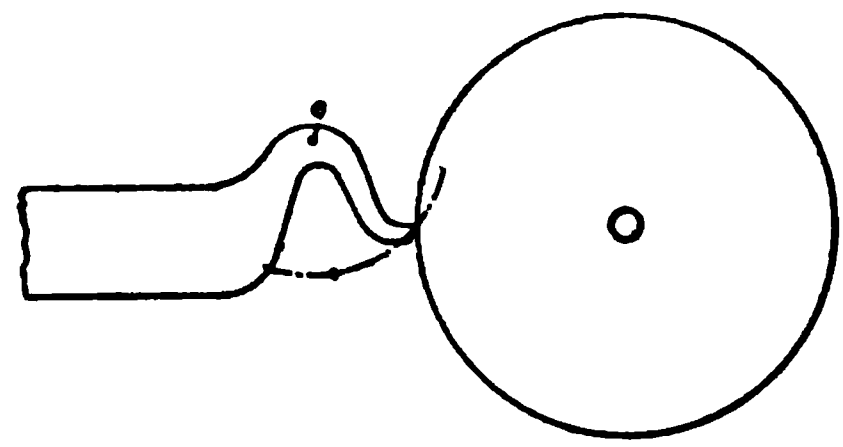

FIG. 65.

Fig. 66 shows another form of spring tool applied to the work. This form of tool is intended to avoid all danger of springing into the work. The tool is so set that as the force of the cut bends it down, the point follows the arc of the circle as indicated. This circle is described about the point of support of the tool. As the tool springs down,

the point will naturally move away from the work, and so prevent its digging into the stock.

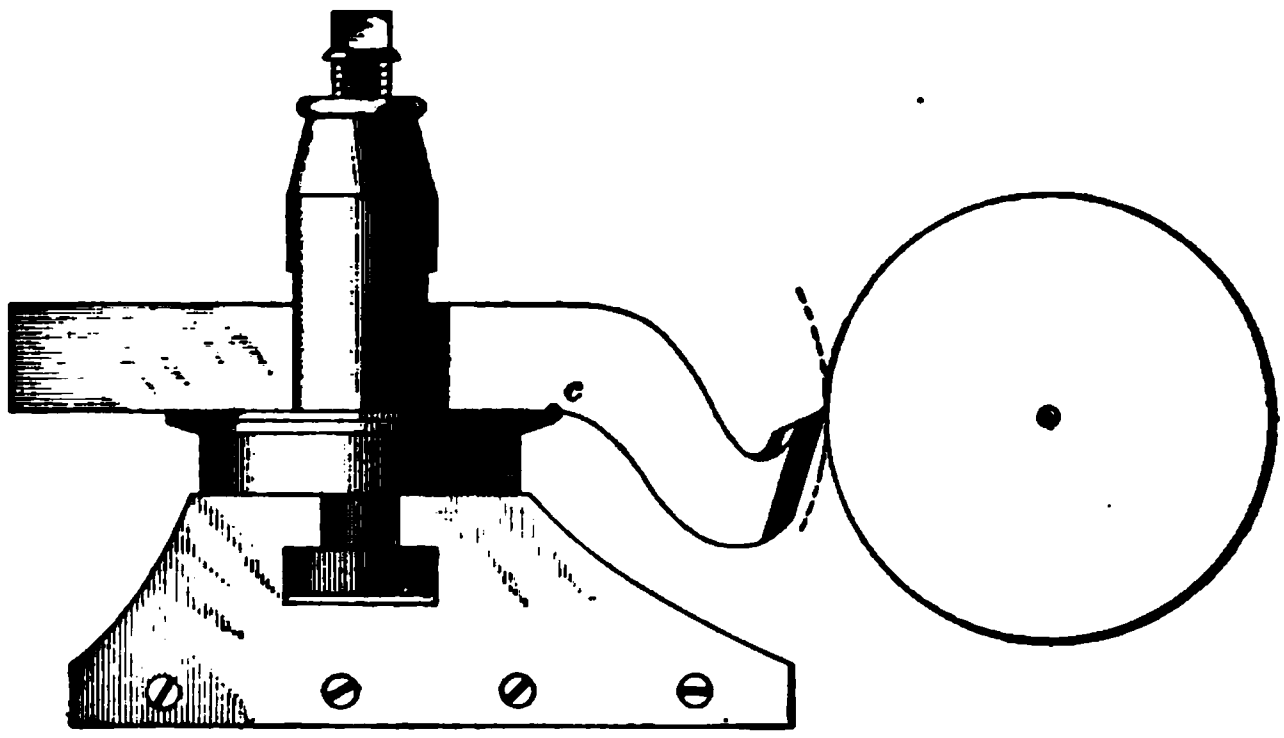

FIG. 66.

CHATTERING.

76. Cause of Chattering.—Chattering of the tool, which produces a rough corrugated surface on the work, may be traced to many sources. The action that occurs when chattering takes place is as follows: The tool is caught by the work and drawn in so as to cut deeply; when it has sprung in a certain depth, the tool and work are placed under a strain that causes them to spring apart. These performances take place in quick succession and in more or less of a rhythmical order, producing at times a musical sound, and, at other times, a most discordant noise. This springing action that takes place may be traced to different causes, as, to the frailty of the work, as in long slender shafts or long pieces being turned upon slender arbors; to the method of driving or rotating the work; to looseness of the spindle in the headstock bearings, or to looseness in the cross-slide of the tool rest; to looseness between the lathe centers or to the peculiar shape or manner of setting the tool. Broad-edged tools have a greater tendency to chatter than narrow ones.

77. Remedies for Chattering.—When a second cut is taken on a surface that shows slight chatter marks, they may be removed by grinding the tool so that its top face has a slight angle of top side rake just sufficient to keep the broad edge of the tool from falling into the old chatter marks. If in Fig. 67 the cutting edge of the tool was at first along the line *A B*, the chatter marks would be parallel to it. These chatter marks can generally be removed by giving the tool top side rake along the line *C D*.

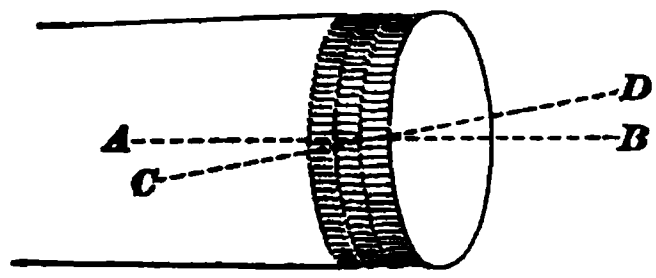

FIG. 67.

When remedies in the way of adjustment and methods of driving have been tried without avail, the spring tool often proves successful in removing the chatter marks.

HAND TOOLS OR GRAVERS.

78. Diamond-Pointed Graver.—Hand tools, as their name implies, are held in the hand while operating upon the work. Their cutting action depends on the laws of rake and clearance. Their cutting power, compared with tools held in a slide rest, is very small. Their principal use in metal working is turning very small pins and pivots on such lathes as watchmakers' or small bench lathes for working brass, and for finishing curves and pieces of irregular outline. Chief among these tools is the **diamond-pointed graver.** It is a piece of steel ground with a bevel on the point, as shown in Fig. 68. When this tool is used for rounding a corner such as the end of a bolt or screw, it rests upon one

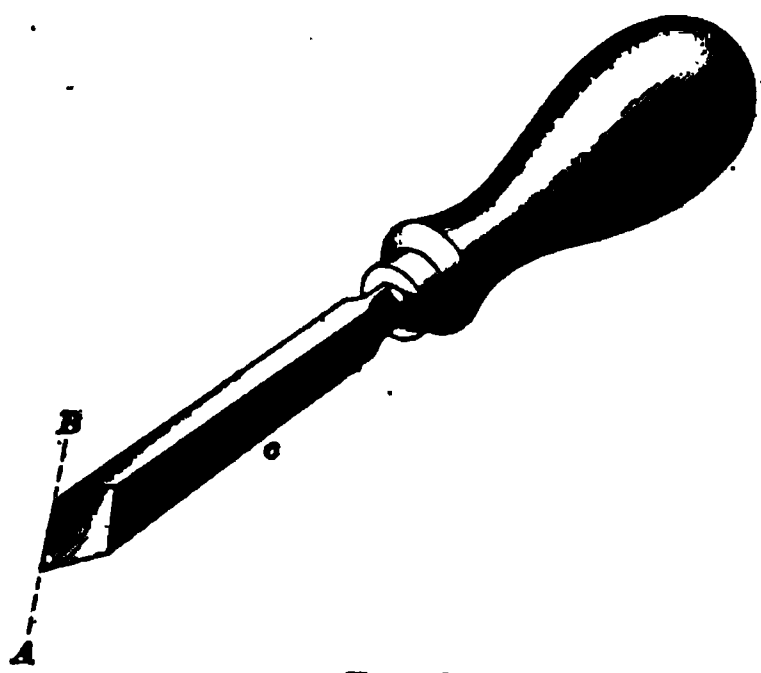

FIG. 68.

corner *c*, Fig. 69, while the edge *A B* does the cutting. The angles of rake and clearance are easily changed to give the best results by changing the position of the tool.

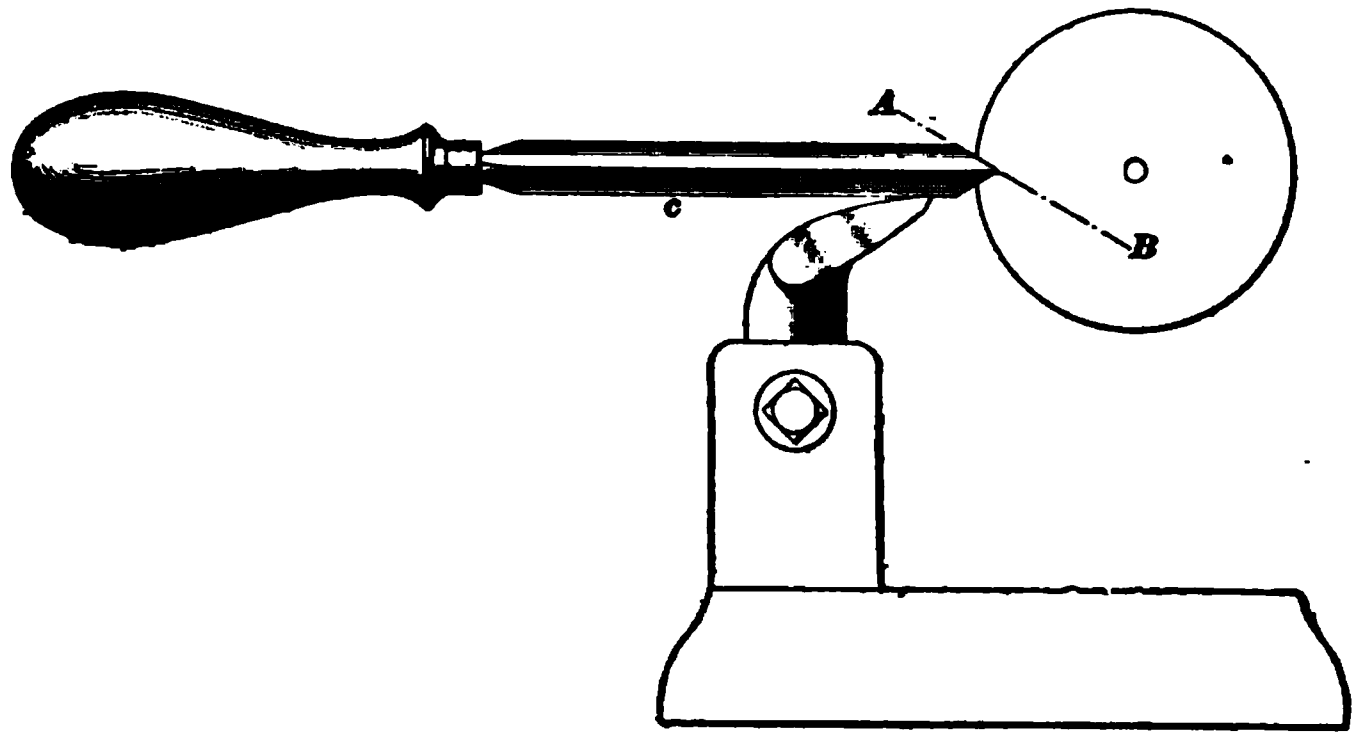

FIG. 69.

79. Round-Nosed Graver.—Fig. 70 shows a **round-nosed graver.** This tool is used for finishing concave curves. The under side lies flat on the rest when it is used.

FIG. 70.

Gravers are commonly made from worn-out files of either square or rectangular section. Their points can be ground to any particular shape best suiting the work.

TOOLS FOR BRASS.

80. Tools for brass are usually drawn out nearly to a point similar to a round-nosed tool. The top face is made flat, as shown in Fig. 71, while the point is ground similar to a threading tool with the point rounded. Tools with broad edges are seldom used for brass unless they are some kind of forming tool. The characteristic features of

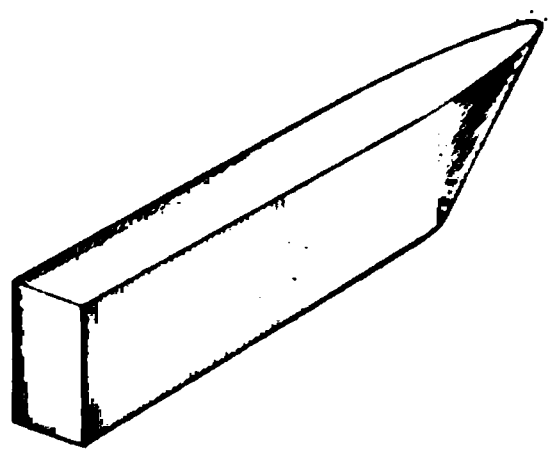

FIG. 71.

a brass tool are: it is flat on the top, is set at the center of the work so that it has no top rake, and is ground with more front rake than similar tools used on iron and steel.

TOOL GRINDERS.

81. Tool Grinding.—It is a common practice in most shops for each man to grind his tools to suit himself, the grinding being done on grindstones or special emery wheels for tool grinding. The result is a very great stock of steel, which is necessary to make up the sets of tools for the different machines, and an almost infinite number of shapes. The best managed shops are now adopting a system whereby the tools are systematically and scientifically ground by one man. All tools are kept in a tool room and are checked to the workmen as used. There are a number of automatic tool grinders on the market designed for this purpose, and some of them are described later.

82. Machine-Ground Tools.—Fig. 72 shows a few typical lathe tools as ground upon one of the standard tool grinders. Fig. 73 shows some typical planer tools as ground upon the same machine, and Fig. 74 some slotting machine tools, threading, and other special tools. Figs. 75 and 76 illustrate charts that are sent out with Sellers' grinding machine, giving the clearance angles for grinding the different tools. The numbers placed opposite the tools in Figs. 72, 73, and 74 correspond to similar numbers on the shanks of the tools in Figs. 75 and 76. In the case of the side-finishing planer tools illustrated in Fig. 76, it will be noticed that two angles are given for *d*. The upper angle is the top side rake, at right angles to the cutting face, and the lower angle is the top rake in the direction of the cutting face. These charts and figures are given simply to show what is considered good practice in regard to the shape of the tools.

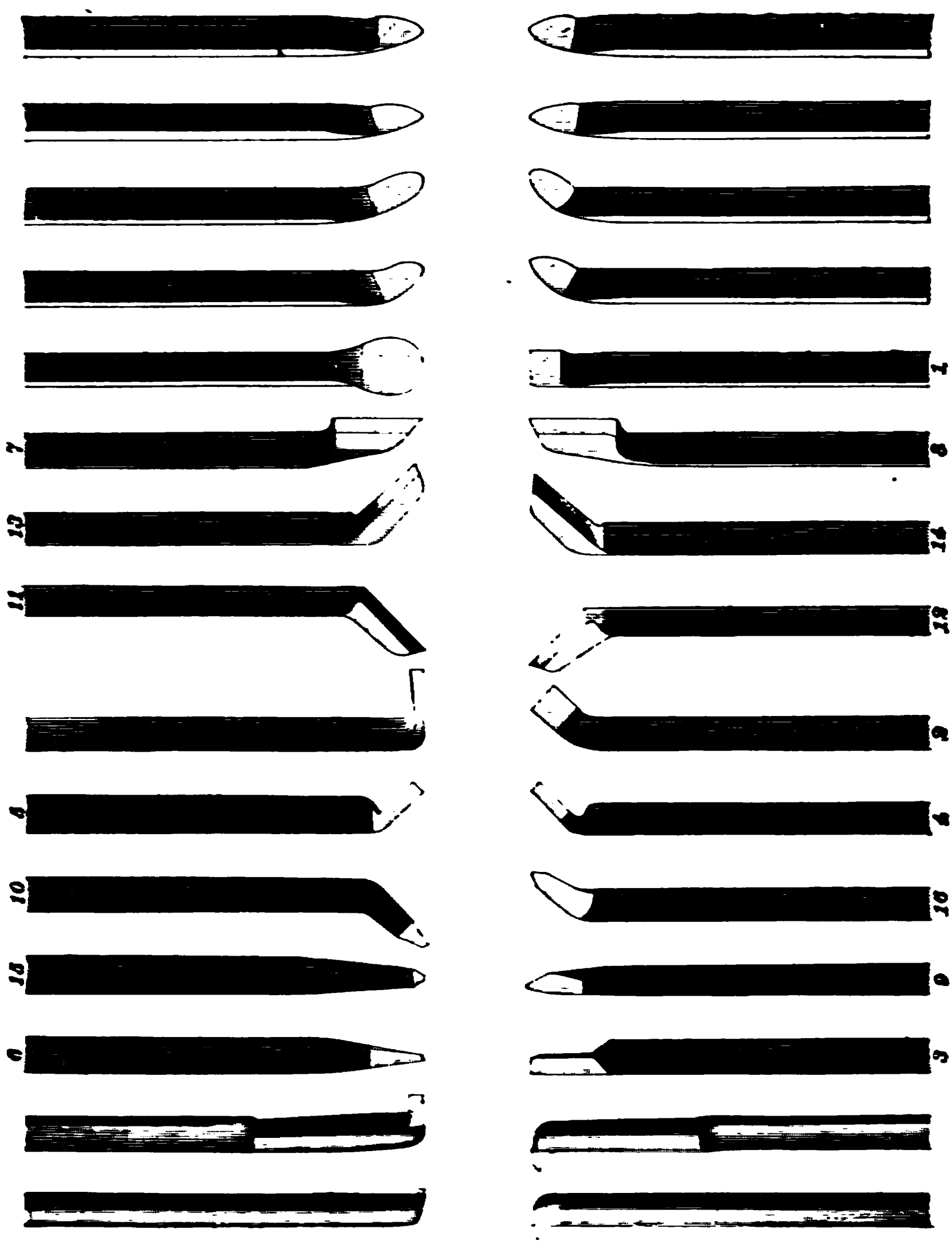

FIG. 72

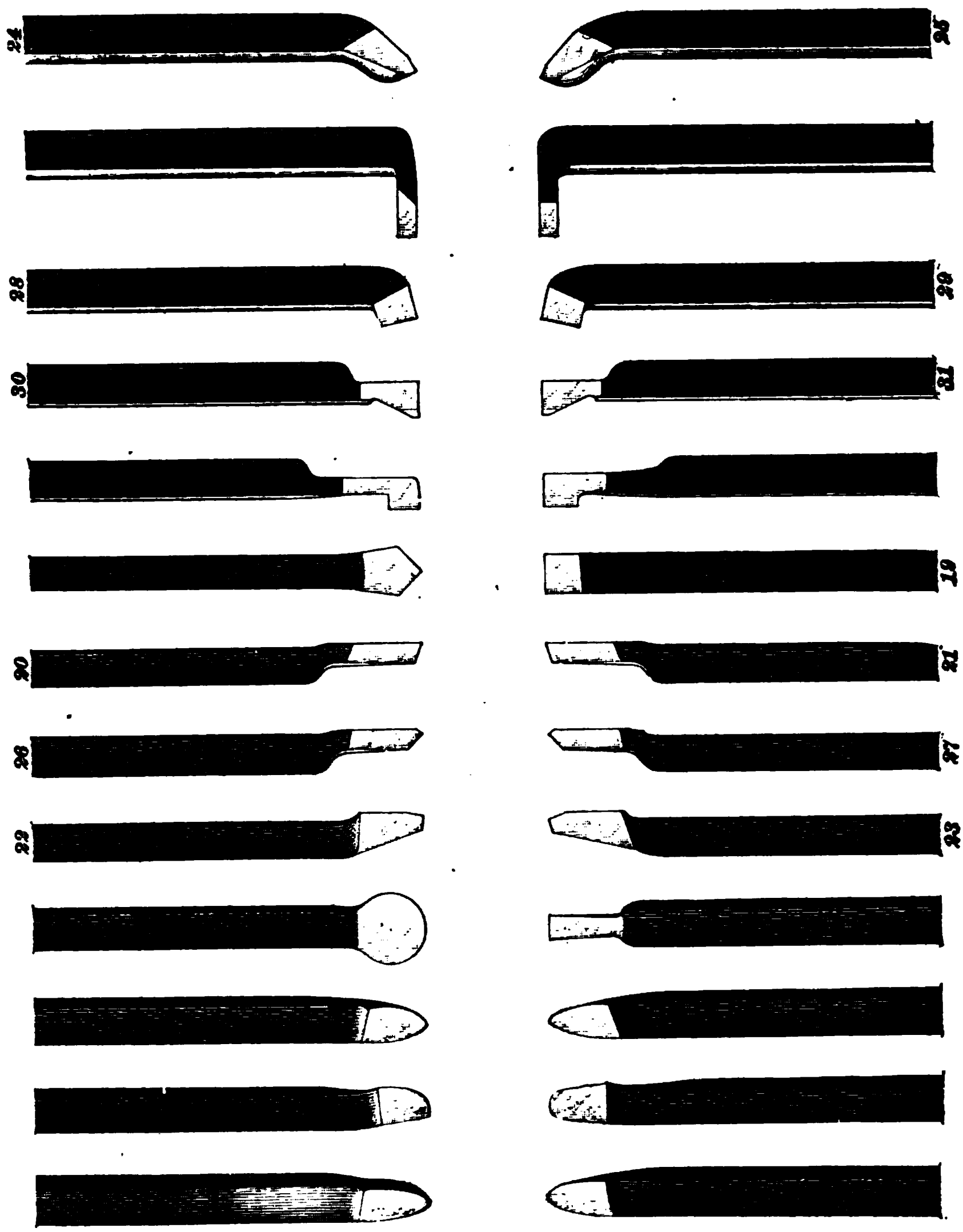

FIG. 73.

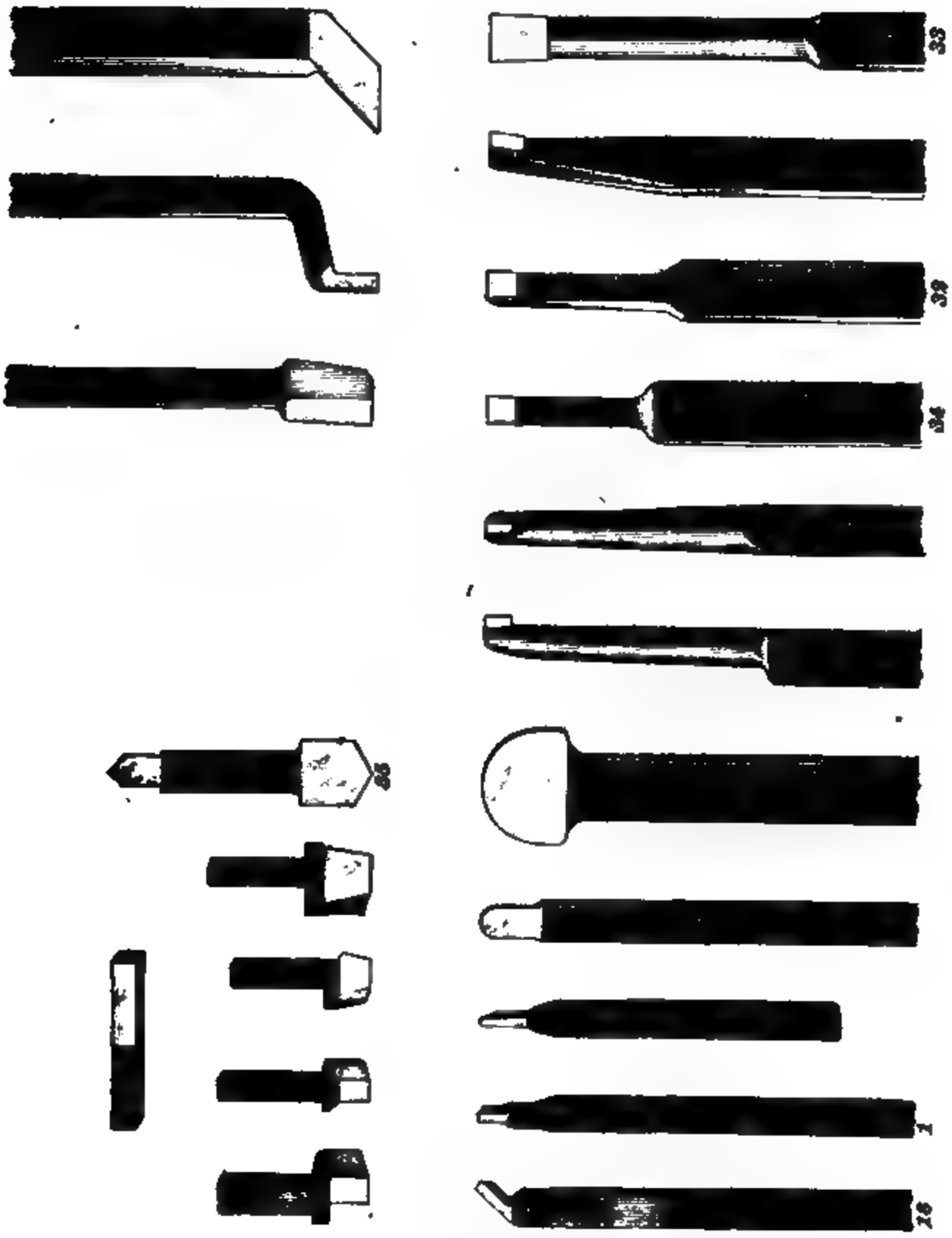

FIG. 74.

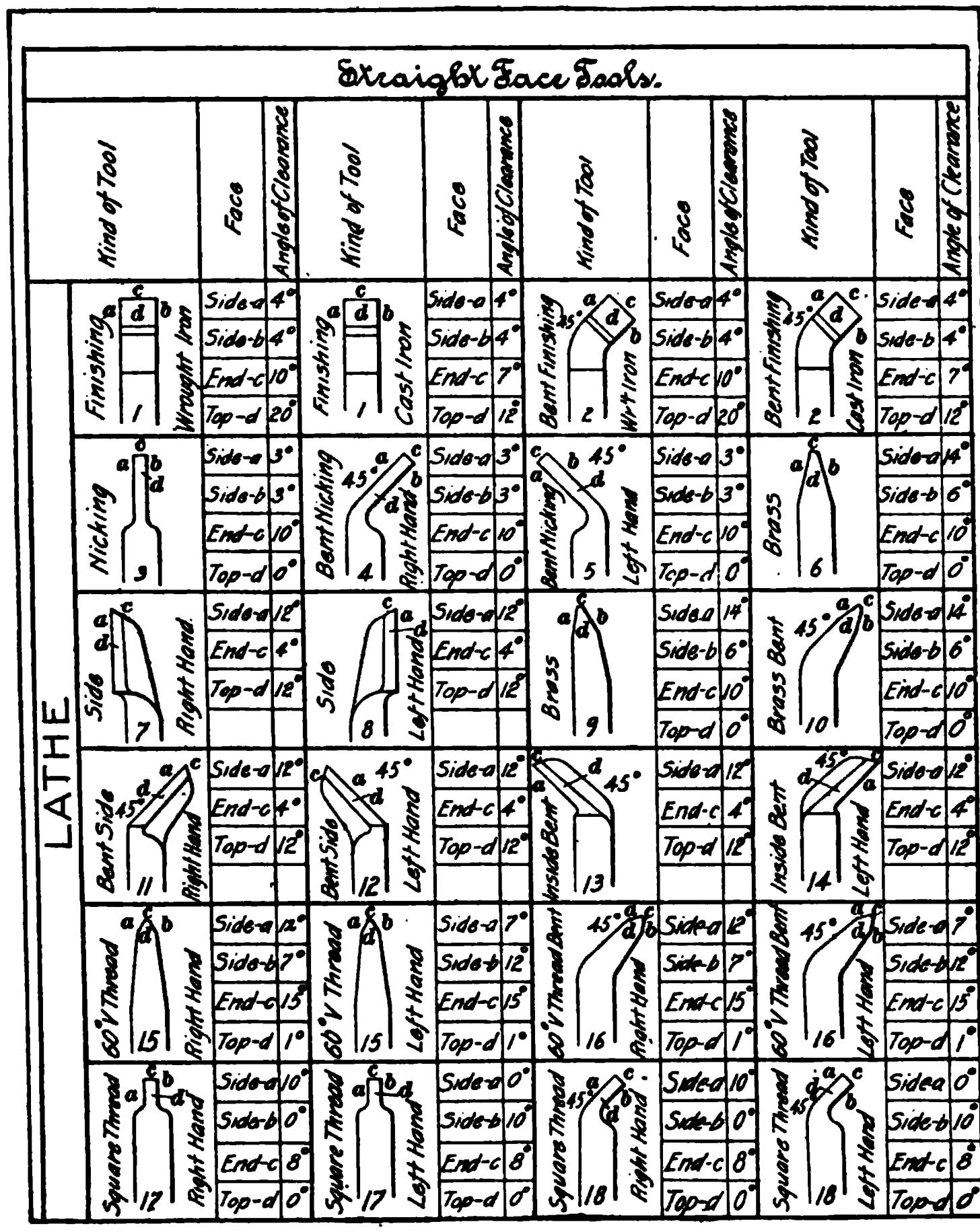
Straight Face Tools.
LATHE
Kind of Tool
Face
Angle of Clearance
Finishing
Wrought Iron
Cast Iron
Bent Finishing
Nicking
Bent Nicking
Right Hand
Left Hand
Side
Brass
Brass Bent
Bent Side
Inside Bent
60° V Thread
Square Thread
Side-a
Side-b
End-c
Top-d

FIG. 75.

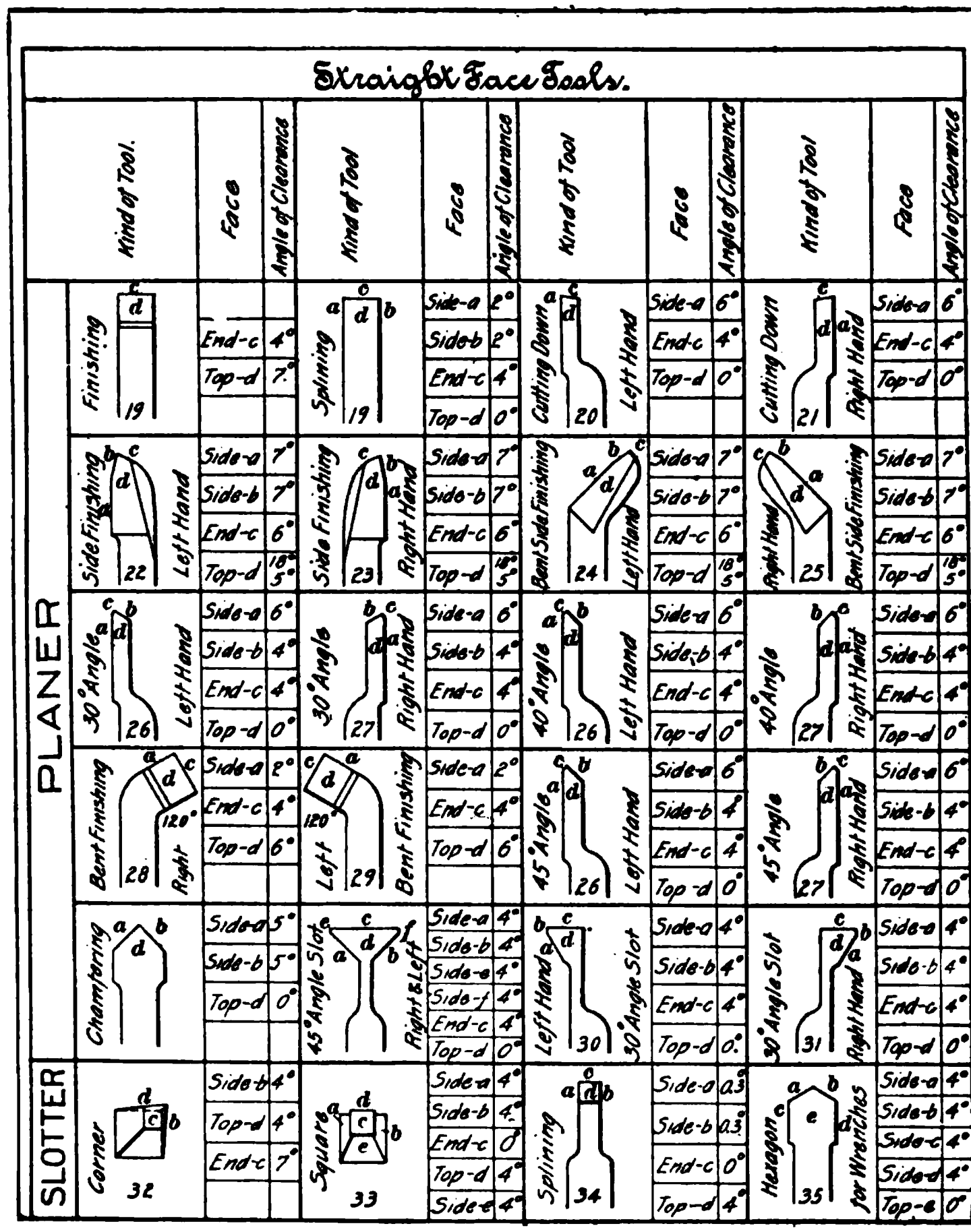
Straight Face Tools.
Kind of Tool.
Face
Angle of Clearance
PLANER
SLOTTER
Finishing
Splining
Cutting Down
Left Hand
Right Hand
Side Finishing
Bent Side Finishing
30° Angle
40° Angle
45° Angle
Bent Finishing
Right
Left
Chamfering
45° Angle Slot
Right & Left
Left Hand
30° Angle Slot
Corner
Square
Hexagon
for Wrenches
Side-a
Side-b
Side-c
Side-d
Side-e
Side-f
End-c
Top-d
Top-e

FIG. 76.

LATHE WORK.

(PART 4.)

CUTTING SPEEDS AND FEEDS.

CUTTING SPEED.

1. Meaning of the Term Cutting Speed. — The *cutting speeds* and *feeds* of machine tools is a subject for much careful study. The output of work from a machine and the cost of production depend very largely on the cutting speed used.

The **cutting speed** of a machine tool is the speed at which it passes over the surface of the work. This speed is measured in feet per minute. Before discussing cutting speeds, a very clear understanding should be had of its exact meaning. Suppose the speed of a lathe is such that the tool can cut in 1 minute a shaving that, if it could be straightened, would measure 20 feet in length. The cutting speed would then be 20 feet per minute. If the speed of the lathe were such that the tool would cut a shaving 10 feet long in 1 minute, the cutting speed would be 10 feet per minute.

2. Relation Between Cutting Speed and Speed of Work.—Cutting speed and the speed of the work must not be confused. Two lathes are working and each making 50 revolutions per minute. One is turning a piece 1 inch in

For notice of copyright, see page immediately following the title page.

diameter and the other a piece 2 inches in diameter. The circumference of the 1-inch piece is 3.1416 inches, say 3.14 inches and that of the 2-inch piece is 6.28 inches. In the 1-inch piece the tool passes over 3.14 inches for each revolution and in 50 revolutions it would pass over 50 × 3.14 or 157 inches = 13 feet 1 inch. The 2-inch piece having twice the circumference will pass over twice the distance or 26 feet 2 inches. These are the cutting speeds when both lathes have the same speed. It will thus be seen that *the cutting speed varies directly with the diameter of the work when the speed of the lathe remains constant.*

LIMIT OF CUTTING SPEED.

3. Factors Limiting the Cutting Speed.—The cutting speed should always be as great as the nature of the work or the durability of the tool will permit. The limit of the cutting speed depends on the durability of the tool. A tool that will cut well when the work is running at a low cutting speed will not cut well nor endure long when the cutting speed is much increased. The limit may be ascertained by a number of speed trials. At a moderately low speed the tool retains its edge, but if the speed be increased, the tool will heat at the point, the temper will be started, and the point softened and quickly worn away. As soon as the cutting point or edge is dulled, the friction increases and greater heat is generated, so that in a very short time the entire point of the tool will be worn away.

4. The greatest speed at which the tool will retain its cutting edge a sufficiently long time to turn a fair amount of work is the **limit of cutting speed.** Iron or steel running at high speeds soon removes the temper so that the tool will not cut. Soft pieces of steel that could easily be turned at a low speed would, when running rapidly, wear away the point of the hardest tool nearly as fast as if the tool were brought against a rapidly revolving emery wheel.

This limit of cutting speed varies greatly. In attempting to determine this limit, it will be found that it depends largely on, *first*, the kind of metal being turned; *second*, the hardness of that particular piece; *third*, the cut, whether it be a heavy roughing cut or finishing cut; and, *fourth*, the diameter and length of the work.

5. Effect of Kind of Metal on Cutting Speed.— The cutting speed is greater for soft metals than for hard. This is illustrated in the high speed used for wood-cutting tools. Copper, brass, babbitt, and similar metals will admit of a much higher cutting speed than cast iron or steel. One reason why copper will admit of a higher cutting speed than iron is because it is softer and less force is required to turn the shaving; consequently, less heat is generated at the cutting point of the tool. Moreover, copper is such an excellent conductor of heat that, as soon as heat is generated, it is at once conducted from the point of the tool so that the heat cannot accumulate as fast as in iron or steel. It will be found in turning iron or steel that the work and the shank of the tool keep quite cool, most of the heat being concentrated at the point of the tool and in the shaving. Whatever the metal being turned, the speed must be slow enough to give the heat time to pass into the work before it becomes sufficient to draw the temper on the tool. The reason the tool becomes so much hotter than the work is that the tool is constantly cutting, while the work is continually changing its position and bringing new points in contact with the tool. This allows the heated part of the work to cool while it is completing the rest of the revolution. The shaving, which is light compared with the mass of the work, has no way of distributing its heat except by radiation, and, consequently, it comes away from the work at a temperature nearly equal to that at the point of the cutting tool. To a certain degree, the rotating of a large piece tends to keep the point of the tool cool, for it no sooner severs a part of a shaving at one point on the surface of the

work than a second point is presented to it, and so on around the work, the tool constantly being forced into cool metal, which, for an instant, would tend to cool the point of the tool.

6. When the tool is exceedingly sharp, a greater amount of heat is generated by the force required to turn the shaving than by the act of severing it. The force required to press a sharp tool into the work depends on the angle of the side faces, and if a blade could be made infinitely thin, with its edge infinitely sharp, it would be found that the mere act of severing a shaving would require very little power. For illustration, the thin blade of a cheese knife will pass easily through a cheese, while a thick, wedge-shaped knife will require a heavy pressure. This is caused by the necessary bending aside of the parts before the blade can enter farther.

7. It may therefore be assumed that the heat generated in taking a cut is due to the bending and turning aside of the shaving, and to the friction of the shaving on the top face of the tool and of the work on the front face. This applies to a tool with a sharp edge. This fact in part accounts for the peculiar wear that is sometimes noticed on tools that are considered excellent.

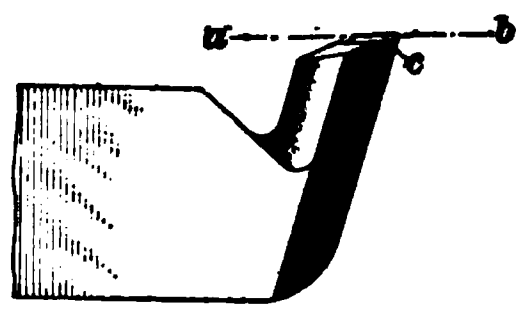

FIG. 1.

Fig. 1 shows a tool as it is sometimes worn after taking a cut on steel. It will be noticed that the cutting edge *a b* has retained its original sharpness, while immediately behind it a small groove *c* has been worn.

This peculiar wear may be explained by assuming that the cutting edge possessed an unusually fine temper, being of sufficient hardness to retain its keen cutting qualities and at the same time being tough enough not to break. This keen edge severed the shaving with ease and caused but little heat. As fast as it entered the work, it was constantly coming in contact with cool points. This tended to keep

the edge cool. At the instant the shaving was severed or cut loose from the work, it was at once turned from its course by sliding on the top face of the tool. The heat thus generated slightly softens the top face of the tool, and the shaving tends to wear away this top face as it turns and slides from the tool. This is more apt to occur when light cuts are being taken at high speeds.

At high speeds, the edge of the tool is more rapidly cooled because of the rapid succession at which the cool points on the work are brought against it. At slower speeds, with heavy cuts, the heat from turning the shaving overbalances the cooling action of the work; consequently, the edge of the tool becomes hot and suffers from it. It must not be inferred from these statements that a tool will stand better at a high than at a low rate of speed. Such is not the case. If, in the case of the tool shown in Fig. 1, the speed had been slightly reduced, the tool would have done the work just as well and would not have been worn on the top face. This simply shows that in this case the limit or critical cutting speed had been reached, and increasing it even slightly would have ruined the tool.

8. The power required to force a tool into the cut depends on the angles made by the cutting faces, and the harder the material being cut, the less acute should the cutting angle be. This large angle of the cutting faces is necessary to support the cutting edge, since, for hard materials, the tool must be exceedingly hard, otherwise the sharp edge will be pressed down and rounded. This is what really does occur as a tool dulls. The keen cutting edge is worn off so that it becomes a rounded surface, as shown in much exaggerated form at *a*, Fig. 2. As soon as the keen edge becomes rounded, heat is generated at this edge as it is forced to sever the shaving, and the more it becomes rounded, the more heat is generated, until at last the tool will cease to cut. If the edge were sufficiently hard

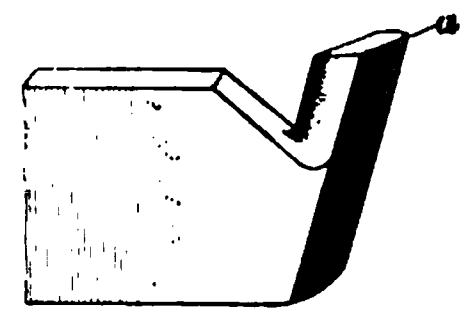

FIG. 2.

to resist the pressure of very hard material, it would be so brittle that, unless the cutting edge were well supported, the tool would break. Keen acute angles would cut more easily and be more desirable if they would not break.

9. It is thus seen that for hard, tough materials, hard tools with little top rake must be used, while, for softer materials, greater keenness or top rake may be given. Because of the greater power required to force tools having little keenness into the work, a greater amount of heat will be developed. *Since the limit of cutting speed is governed by the amount of heat generated, it will be seen that the tool having the greater angle of keenness must be used at a lower speed than the acute one, otherwise it will pass its heating limit.*

This applies in the same way to cuts taken upon the same kind of material that varies in degree of hardness. Cast iron, for instance, will be found to vary a great deal in its degree of hardness, some being very soft and some very hard.

10. If two pieces be of the same strength or hardness, the more acute the tool, the less the power required to force it into the work. With two tools of the same shape, and taking the same depth of cut in materials of different degrees of hardness, the softer material will require the less power. This is because of the ease with which the shaving is bent and turned from the tool. The softer material, therefore, develops less heat for the same shape of tool and depth of cut than the harder material; consequently, an increased speed may be used.

11. Roughing Cuts.—Roughing cuts are generally heavy and the duty of the tool severe. It therefore becomes necessary to use slower cutting speeds for roughing than for finishing cuts. This reduced cutting speed will give a slight increase in lathe power, thereby making it possible to take still heavier cuts when it is necessary.

12. Finishing Cuts.—Finishing cuts are best made at a high cutting speed, especially on cast iron, as it will give a smoother surface than can be obtained with a slower cut. When a slow cutting speed is used on cast iron, there is a tendency for the shavings to break out of the work slightly in advance of the cutting edge. This is due to the crystalline structure of the material. This is shown in somewhat exaggerated form in Fig. 3, where a shaving *a* is shown just as it is breaking from the work. When the slow speed is used, the shaving breaks slowly from the work and in so doing breaks into the surface and carries away with it particles of metal that should be left. This will leave a surface that is more or less pitted, and, should it be desired to finish it by polishing, these little pits will be found to be of sufficient depth to make it very difficult to obtain a fine polish. When a higher speed is used, or the tool is ground with a keener cutting edge, this pitting will disappear.

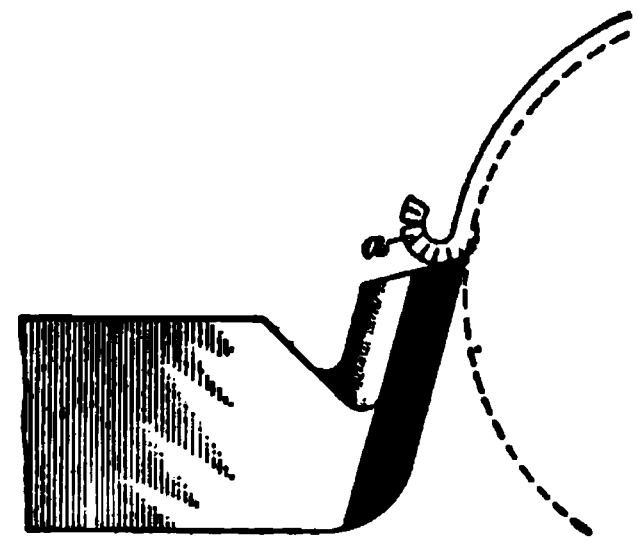

FIG. 3.

INFLUENCE OF DIAMETERS ON RESISTANCE TO CUT.

13. Suppose that a diamond-pointed tool is cutting a cylinder of the diameter represented by the circle *e*, Fig. 4, to the size represented by the dotted lines. The force or pressure on the top face of the tool is measured in a direction at right angles to the face of the tool; therefore, the direction of the force on this tool is along the line *c o* perpendicular to *a o*. This line intersects the circumference of the outer circle at *b*. Suppose, in the second case, that the tool is cutting the same depth of cut

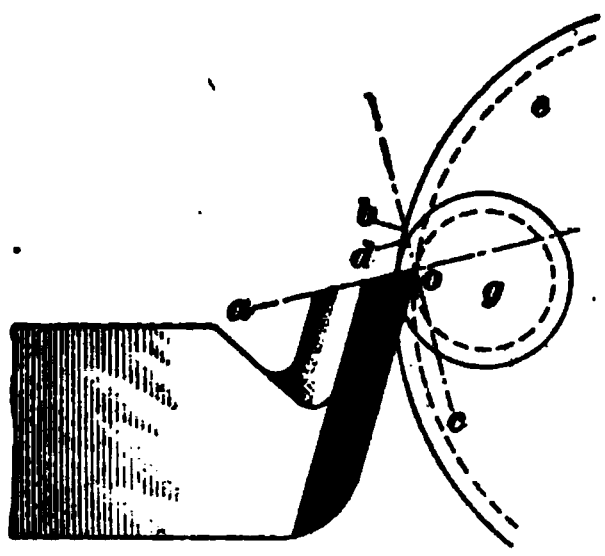

FIG. 4.

on a smaller cylinder represented by *g*. The force of the cut will be in the same direction as in the previous case along the line *c o*. The line *c o* intersects this smaller circle at *d*. These lines *d o* and *b o* graphically represent the relative forces required to turn the shaving. In the larger piece, the shaving has a backing and support extending from the point of the tool to the point *b*, while, in the smaller piece, the shaving is backed only by metal to the point *d*. It will readily be seen that less power will be required to turn the shaving on the smaller piece than on the larger one. Since this is true, it is theoretically possible to take a deeper cut on the small piece with the same power required for the original depth of cut on the larger piece.

14. Average Cutting Speeds.—The cutting speed depends on so many conditions that it is impossible to give any exact rule that will apply to all cases. Different cutting speeds have been given for the different metals, but these vary greatly. An average, however, has been taken, as given in the accompanying table, which gives fair speeds that may be used under favorable conditions for taking roughing cuts of medium depth.

It will be noticed in this table that the cutting speed of brass is considerably greater than that of iron or steel, also that the cutting speed is increased for the small diameters of work. The cutting speeds given for cast iron are for short cuts taken on very soft castings. Long, continuous cuts on hard castings would require a cutting speed somewhat below that given in the table.

15. Relation of the Steel to Cutting Speed.—In the case of special self-hardening steel, the cutting speeds of machine tools have been much increased. This is due largely to the amount of heat these tools will stand before their temper is impaired. With some of the best brands of self-hardening steel, the rate of cutting speed, compared with that used with ordinary forged and tempered tools, is nearly doubled. With these tools, shavings may often be cut from tool steel at such a high cutting speed that the heat

CUTTING SPEEDS.

	Diameter of Work.	Cutting Speed in Feet Per Minute.
Wrought Iron and Machine Steel.	$\frac{1}{2}$	38
	1	35
	$1\frac{1}{2}$	30
	2	28
	$2\frac{1}{2}$	25
Cast Iron.	1	45
	$1\frac{1}{2}$	45
	2	40
	$2\frac{1}{2}$	40
Tool Steel.	$\frac{3}{4}$	24
	$\frac{7}{8}$	20
	1	20
	$1\frac{1}{2}$	18
Brass.	$\frac{3}{4}$	110
	1	100
	$1\frac{1}{4}$	90
	$1\frac{1}{2}$	80

generated will sometimes be sufficient to draw the temper color on the steel shaving to a dark blue. This is equivalent to a temperature of about 550°.

16. When Low Cutting Speeds Should Be Used. While in most cases it is desirable to work up to the limit in cutting speed, it is not in all cases the most advisable. With a single-pointed turning tool that may be quickly and easily sharpened, it is a desirable thing to do. In the case of special tools intended to perform certain finishing operations and when the accuracy of the piece depends

to some extent on the action of the special tool, then that tool should be favored by using lower cutting speeds. For example, consider a reamer that is to finish holes smooth and true and to an exact diameter within a thousandth of an inch. The size of the hole will depend on the size of the reamer, and when the cutting edge is worn away one-half a thousandth of an inch, the reamer will make the holes too small. Such a tool should be handled with care and the cutting speed sacrificed for the sake of maintaining the cutting edge.

Taps and dies should not be run at such a high cutting speed as can be used for lathe tools. Chucking tools should also be favored, especially if they are intended to remain at a particular size. Due care and judgment must be exercised in each case to get the best results.

CUTTING FEED.

17. Definition of Feed.—The **feed** of a tool is the amount of its side movement along the length of the bed per revolution of the work, or the number of revolutions required to move the tool sidewise one inch. The feed, in turning, and the pitch of the screw, in screw cutting, are the same; thus, a feed of $\frac{1}{10}$ inch means that 1 turn of the work feeds the tool over the work a sufficient distance to finish $\frac{1}{10}$ inch in length. Sometimes the finer feeds are designated by a number corresponding to the number of turns necessary to finish 1 inch, as, for instance, a feed of 10, which means that 10 revolutions will move the tool 1 inch.

18. Relation Between Feed and Material Being Cut.—The best feed to use on a piece of work depends on many conditions. When cylindrical accuracy is desired on wrought-iron or steel shafts, it is best to use a fine feed for finishing, since, with a fine feed, it is possible to use a tool with a narrow point. The narrow-pointed tool will cut more freely, and, consequently, with less spring to the tool and

the work. Time, however, is of great importance in machine work, and sometimes coarser feeds will finish with sufficient accuracy. The feed and the width of the point of the lathe tool are interdependent, the point of the tool being slightly wider than the amount of feed per revolution.

19. Cast iron will generally admit of broader feeds than wrought iron or steel. This is due largely to the difference in the action of the shaving on the tool. With cast iron, there is a tendency for the shaving to break immediately when turned out of its course by the top face of the cutting tool. This constant breaking of the shaving tends to relieve the tool of undue pressure. In wrought iron or steel, the shaving does not break up so easily. When, in turning steel, the broad cutting edge of the tool is set parallel to the axis of the work, any slight pressure that may tend to spring the tool into the work causes the whole broad edge to spring in. This causes the tool to take instantly a very much deeper hold, and, because of the tenacity of the steel, the tool will be carried deeper and deeper until it reaches a point where the strain on the tool balances the pressure of the shaving, at which point the tool will continue to cut at this depth. If the work is not sufficiently rigid to hold its shape while the tool is thus sprung and taking a deep cut, the piece will bend slightly. As the hollow side of the bent piece comes around to the tool, the cut will grow less until the heavy side again comes around, whereupon the cut will be heavier than before, and, in most cases, the work will be ruined. Broad cutting-edged tools should never be put on a piece of wrought iron or steel, unless the operator is quite sure that there is sufficient rigidity to withstand the cut.

COMPUTATIONS RELATING TO CUTTING SPEEDS.

20. To Find the Cutting Speed.—Suppose a shaft 4 inches in diameter is being turned at the rate of 10 revolutions per minute. It is desired to find the cutting speed of the tool in this case. The circumference or distance around

the shaft is $3.1416 \times 4 = 12.5664$ inches, say 12.57 inches. This is the length of shaving cut in 1 revolution. Multiplying 12.57×10, gives 125.7 inches, the length of shaving in inches turned in 1 minute. As the cutting speed is measured in feet per minute, $125.7 \div 12 = 10.47$ feet, say 10, the cutting speed. In some cases, for a rough or approximate value, 3.1416 is assumed to be 3. Thus, in the above case, if a shaft is 4 inches in diameter, its circumference will be about 3 times that, or 12 inches equal 1 foot, and if it cuts 1 foot of shaving for 1 revolution, it will cut 10 times that, or 10 feet for 10 revolutions.

21. The cutting speed for any lathe may be found by applying the following rule:

Rule.—*Find the continued product of the diameter of the work, in inches, the number of revolutions per minute, and 3.1416 inches; this result divided by 12 will be the cutting speed in feet per minute.*

For example, to find the cutting speed of a shaft $2\frac{1}{2}$ inches in diameter, making 75 revolutions per minute, take the continued product of the diameter, in inches, the revolutions per minute, and 3.1416. This gives $2\frac{1}{2} \times 75 \times 3.1416 = 589.05$ inches per minute. Dividing by 12, we obtain $\frac{589.05}{12} = 49$ feet per minute, very nearly, as the cutting speed in this case.

22. To Find the Number of Revolutions Required to Give a Desired Cutting Speed.—If a steel shaft is 9 inches in diameter, how many revolutions must it make to give a cutting speed of 20 feet per minute?

The distance around the shaft equals 3.1416 times its diameter, or $3.1416 \times 9 = 28.2744$ inches, say 28.27 inches; therefore, for 1 revolution of the shaft, 28.27 inches of shaving will be cut. Twenty feet equals 240 inches. To cut off 240 inches of shaving per minute will require as many revolutions as 28.27 is contained in 240, or 8.5, nearly. Therefore, the shaft should make $8\frac{1}{2}$ revolutions per minute

to give a cutting speed of 20 feet per minute. As in the previous case, the fractions may be neglected when making rough calculations and it is desired to save time.

23. Again, suppose the work to be 1 inch in diameter and the cutting speed desired is 20 feet per minute. The circumference of the work equals 3.1416 times the diameter, or 3.1416 inches. The length of the shaving equals 240 inches. It will take as many revolutions of the work to turn 240 inches as 3.1416 is contained in 240, or 76.4 revolutions per minute. Hence, to find the number of revolutions per minute that the work should make in order to have a certain cutting speed, use the following rule, in which it is assumed that the diameter of the work is known:

Rule.—*To find the number of revolutions per minute that the work should make to produce a given cutting speed in feet per minute, multiply the cutting speed by 12, thus reducing the speed to inches per minute, and divide the product by 3.1416 times the diameter in inches.*

$$R = \frac{12\,S}{\pi D},$$

when R = revolutions per minute;
S = cutting speed in feet per minute;
π = 3.1416;
D = diameter of the work in inches.

24. How many revolutions should a shaft 2 inches in diameter make to produce a cutting speed of 30 feet per minute?

Applying the rule just given in the preceding article, we have, indicating the operations,

$$\text{revolutions per minute} = \frac{12 \times 30}{3.1416 \times 2} = 57.3.$$

Therefore, the work should make 57.3 revolutions.

25. To Find the Time Required to Take a Cut. The time required to turn a shaft can also be determined when its length, the feed, and the number of revolutions are given.

Suppose it is desired to find the time required to turn a shaft 10 feet long that is making 25 revolutions per minute with a feed of 20, that is, 20 revolutions of the work to move the tool along the shaft 1 inch.

If the tool moves over 1 inch of length of the shaft in 20 revolutions, to move over 120 inches (the length of the shaft in inches), it will take 20 times 120, or 2,400 revolutions of the work. If the shaft makes 25 revolutions in 1 minute, it will take as many minutes as 25 is contained in 2,400, or 96 minutes, equal 1 hour and 36 minutes.

26. When the length of the work, the number of revolutions necessary to advance the tool 1 inch—the feed—and the number of revolutions per minute are known, the time necessary for the cut is easily calculated by the following rule:

Rule.—*To find the time necessary to take a cut of known length, multiply the length in inches by the feed (number of revolutions necessary for the tool to advance 1 inch) and divide the product by the number of revolutions per minute made by the work.*

For example, applying the rule to case mentioned in the last article, the length is 10 feet = 120 inches, the feed is 20, and the number of revolutions per minute is 25. Indicating the operations, we have

$$\text{time} = 120 \times 20 \div 25 = 96 \text{ minutes.}$$

A case more likely to arise in practice is where the length of the work and its diameter are known and it is required to take the cut at a given speed and feed, the speed being in feet per minute. Suppose it is desired to find the time necessary to turn a shaft 6 feet long and 18 inches in diameter, using a feed of 20 and a cutting speed of 18 feet per minute.

We first find the number of revolutions necessary to give the cutting speed by the rule in Art. **23.**

$$\text{Revolutions per minute} = \frac{12 \times 18}{3.1416 \times 18} = 3.82.$$

Substituting this value in the rule just given,

$$\text{time} = 72 \times 20 \div 3.82 = 377 \text{ minutes} = 6 \text{ hours and } 17 \text{ minutes.}$$

27. Instead of using the rules given in Arts. **23** and **26**, the following rule, which is a combination of the two, may be employed:

Rule.—*The time in minutes is equal to the continued product of 3.1416, the diameter, the feed, and the length divided by 12 times the cutting speed.*

Applying this rule to the case last mentioned,

$$\text{time} = \frac{3.1416 \times 18 \times 20 \times 72}{12 \times 18} = 377 \text{ minutes.}$$

This same result was obtained by the other method. The number 12, which is used in the various formulas, is used to reduce the cutting speed from feet to inches, but if the diameters in the various problems were given in feet, the number 12 would not be needed. For example, how long will it take to turn a flywheel 20 feet in diameter, 24-inch face, if a cutting speed of 15 feet and a feed of ½ inch are used?

A feed of ½ inch equals a feed of 2. Applying the rule given above, and omitting the number 12, since the diameter is given in feet,

$$\text{time} = \frac{3.1416 \times 20 \times 2 \times 24}{15} = 201 \text{ min.} = 3 \text{ hours } 21 \text{ min.}$$

28. Advantages of Coarse Feeds.—When the finishing cut is being taken on a large piece, it is desirable to have the tool retain its sharp edge until the operation is completed, so that the last part of the cut will be as smooth and true as the first. On heavy work, when the tool dulls so that it becomes necessary to resharpen it before the cut is completed, as it takes some time for the work to make a revolution, by the time the tool is adjusted to the same depth as before and the feeds are again working, much time is lost.

29. Suppose, in the flywheel just mentioned, a finishing cut should be attempted by using a feed of 10. By the time the piece was finished, the shaving would be $3.1416 \times 20 \times 10 \times 24 = 15{,}080$ feet, or nearly 3 miles long. At a cutting speed of 18 feet per minute, this would require 13 hours

58 minutes. It would be impossible to get a tool that would stand to cut nearly 3 miles of shaving without getting dull, and the time would be considerably more than necessary. On such a piece as this, the feed would be increased to nearly 1 inch per revolution and the speed reduced to about 15 feet per minute. This would reduce the length of the shaving to 1,508 feet, and at 15 feet per minute would require 100½ minutes, or 1 hour 40½ minutes. This reduces the time to one-tenth the original and makes it possible to use a tool that will last throughout the cut.

ERROR IN LATHE WORK.

PRECAUTIONS TO BE OBSERVED.

30. General Consideration.—The chances for error in machine work are numerous. No sooner is one difficulty overcome than another appears. The workman must never take anything for granted regarding the accuracy of a machine or the work it is producing until he has made sure that all is right by a personal investigation. Even then he must be on the watch, or errors will creep in that are unexpected. These small errors that occur in lathe work become more numerous and troublesome as the degree of accuracy is increased. Things that would not be noticeable in an ordinary line of work become very important in accurate work.

Many of the chances for error that occur may be found and illustrated in a simple piece of cylindrical turning. They may be due to: (1) *spring of the tool;* (2) *spring of the work;* or (3) *inaccurate adjustment of the machine used.*

SPRING OF LATHE TOOLS.

31. Factors Governing Spring of the Tool.—The amount that the tool will spring depends on the position it holds in relation to the work; on the rigidity of the

tool; on the closeness of fit between the tool block and the slide; on the stiffness of the shank of the tool; and on the shape of the tool.

32. Position of the Tool.—It has been shown, Fig. 66, *Lathe Work*, Part 3, that when the point of a tool is set above the center of the work, as it bends in its shank the point tends to follow in an arc of a circle described about the bending point. If this arc cuts into the work, the tool, following in that path, will spring deeper into the work. If the tool is so located that when it bends or springs, the arc described about the bending point moves away from the work, then the tool will spring away from the work. It would seem from this that the best place to set the point of the tool would be level with the center, so that, if the tool springs, it will not spring into the work. A tool properly shaped for this position would have very little front rake, and its keenness would be given entirely by increasing the angle of top rake. Such a tool is absolutely required for taper turning, but, for ordinary turning, other conditions arise, making it objectionable. It may be seen that when this tool is used, the total force acting upon it is in a direction tangent to the diameter of the work at the point of the tool.

33. When a tool without front rake is used, the force will be directly down, or perpendicular to the top of the lathe bed, in the direction of arrow *D C*, Fig. 5. As increased front rake is given to the tool, and it is set higher on the work, the line of force changes its direction, so that if the front rake is 30°, the line of force acting against the point of the tool at *O'* will be in the direction of the arrow *B A*. When the force on the tool is in the

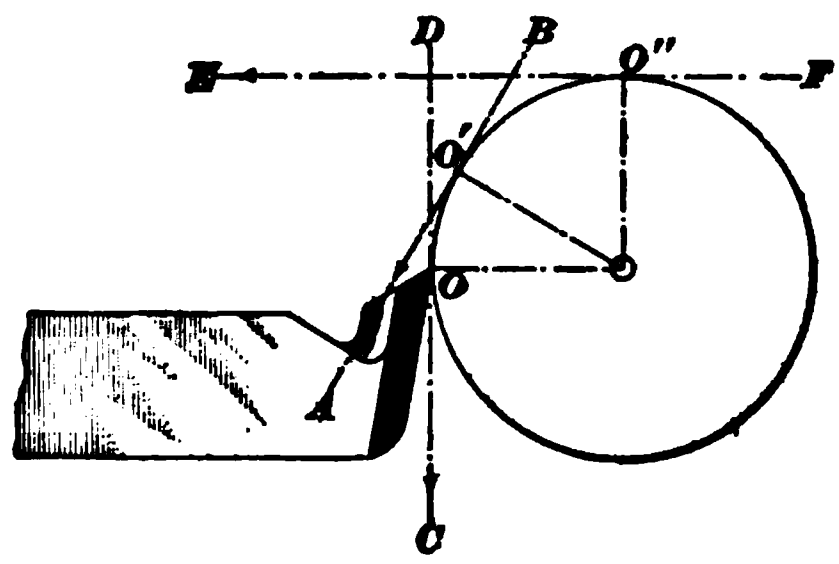

FIG. 5.

direction of the arrow $B\,A$, it tends to force the tool block back from the work; this causes some pressure on the cross-feed screw. If the tool had still more front rake and were set higher, the pressure on the cross-feed screw would increase, and if the tool could be set as high as the point O'', the force of the cut would be in the direction of the line $F\,E$, which would be entirely against the cross-feed screw. This pressure against the cross-feed screw is very desirable. It holds the tool block back and takes up the lost motion that may be in the screw, so that, when an adjustment is being made, any partial turn of the screw at once acts in moving the tool block. It also allows the tool to be held in such a position that there is little danger that the pressure of the shaving on the top face of the tool will pull the tool and tool block forwards, thus taking up the lost motion in the cross-feed screw.

34. It will be seen from Fig. 6 that when a tool is set at the center and ground with much top rake, the pressure of the shaving on the top face is in the direction of the arrow *a*. This is so nearly parallel to the line of the cross-slide that if the slide is loose or the screw has lost motion, the tool will tend to slide into the cut. If the tool is set higher, this force on the top face is in the direction shown in Fig. 7, and there is little tendency to drag the tool into the cut. Practice, therefore, has settled upon tools with a fair amount of front rake, which allows them to be set above the center of the work. This gives the desired pressure against the cross-feed screw.

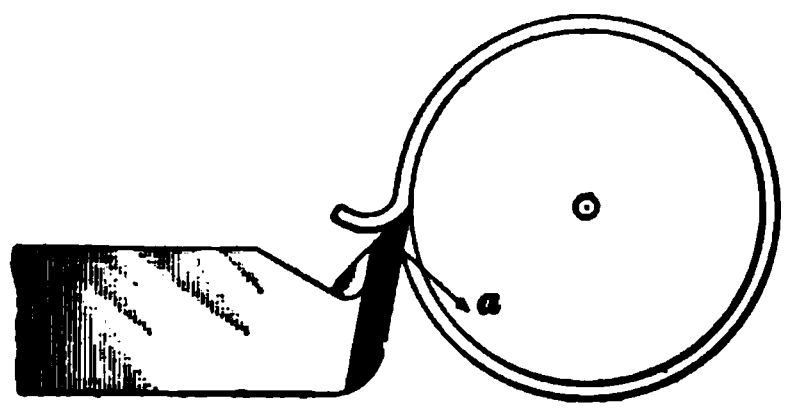

FIG. 6.

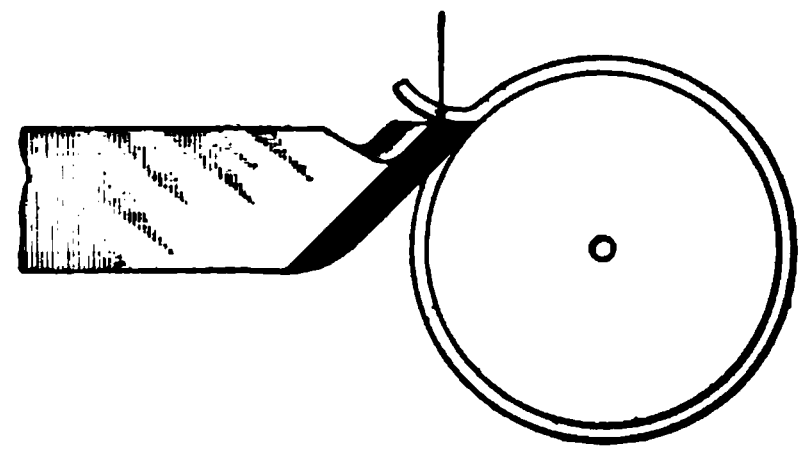

FIG. 7.

35. Spring of the Tool Caused by Variations in the Depth of Cut. — If, in turning a piece, an attempt is made to finish the work very close to size with the first cut, leaving a very light cut for the last, the following results may ensue: The tool is started and the cut taken for a short distance, and, by a series of fine cuts, the work is brought to the desired diameter shown at *a*, Fig. 8.

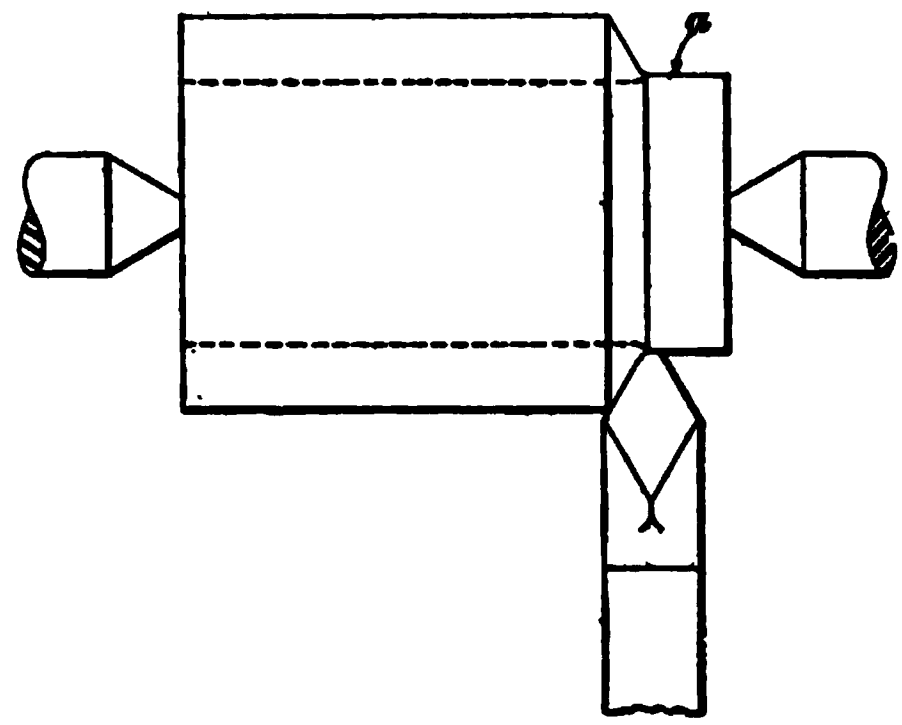

FIG. 8.

The feed is thrown in and soon the tool starts in the heavy cut. The result is that as soon as the heavy pressure comes upon the tool, it causes it to spring and take a still heavier cut. The piece will therefore be turned smaller in diameter, as shown by the dotted lines, and, in many cases, may make the piece below the desired size. This is one reason why at least $\frac{1}{64}$ inch should be left for finishing.

Suppose another case in which a casting or a forging has a large lump on one side, Fig. 9, which must be turned off. Because of the form of the work, the shaving will be of different thicknesses, and, consequently, there will be different pressures upon the tool. This will cause the tool to spring to various depths in the work, with the result that the piece will be neither round nor true. It will be evident that a second finishing cut will be necessary if any degree of accuracy is desired.

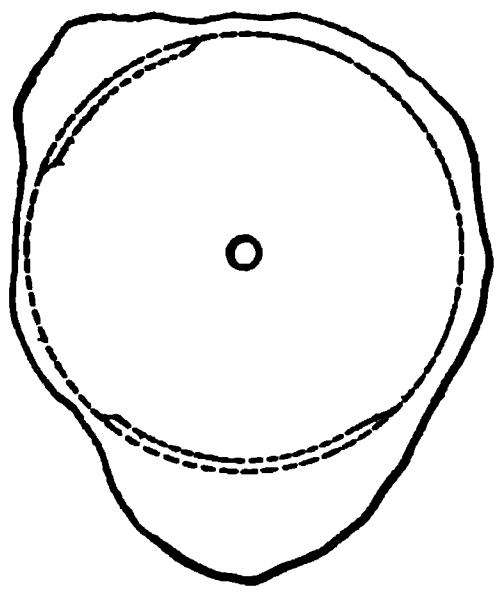

FIG. 9.

36. Methods for Reducing the Error Due to the Spring of the Tool.—The possibilities of error due to the springing of the tool are guarded against by using tools with

heavy shanks, clamping the tool very close to the cutting edge, and in adjusting the tool block so that there is no lost motion in the slide. With these precautions, work may be performed, so far as the tool is concerned, with sufficient accuracy for all ordinary machine construction. In discussing the spring of the tool, it has been assumed that the work was very rigid, so that all the spring occurred in the tool. The tool, however, must not be held responsible for all error, since much is caused by the spring of the work.

SPRING OF THE WORK.

37. Effect of the Weight of the Work on Its Spring.—Any action that may cause the work to bend or deflect so that its axis is not a straight line will cause the work to be untrue. If the piece is short and its diameter great, the spring is less than when the work is long and slender.

In long pieces, the weight of the piece between the centers is sufficient to demand attention.

38. Effect of the Force of the Cut on the Spring. The force required to turn a shaving acts against the tool, tending to spring it down, and reacts in the opposite direction, tending to bend or spring the work up. When the tool is starting at the end of the work, there is less deflection than when it has reached the center. If a bar be supported at the two ends and a load applied at the center, it will deflect more than if the load is applied very near the ends. Because of this greater deflection at the center of the work, the tool cannot cut so deeply; consequently, the work, when turned, will be larger at the center than at the ends. This must be corrected by taking very light finishing cuts, or, in the case of long slender pieces, the work must be supported by the use of steady rests.

SPRING DUE TO METHOD OF DRIVING.

39. Action of Bent-Tail Dog in Springing the Work.—Probably as much spring in cylindrical work is produced by the imperfect methods of driving or rotating the work in the lathe as in any other way.

The ordinary bent-tail dog so commonly used produces a variety of strains in the work, some of which are constant and some variable. All, however, tend to distort the work.

These forces may be considered separately. First, there is a leverage from the point of the live center. The amount of this leverage depends on the length of the live center. This is shown in Fig. 10, which represents a side view of a

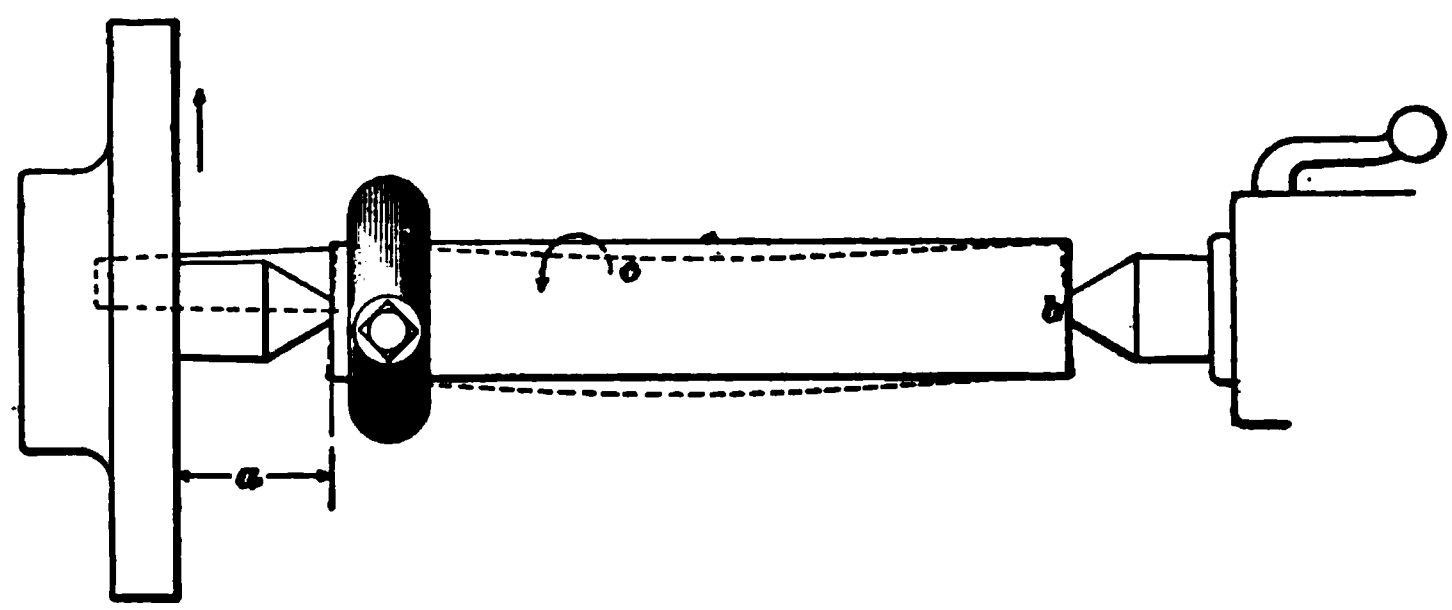

FIG. 10.

piece of work between the centers. The tail of the dog is at the back of the machine. Suppose the end *b* of the piece be clamped rigidly so that it cannot turn. If power be applied to the lathe, the work will tend to turn in the direction of the arrow *c*. Since it cannot, it puts the piece under such a strain that it springs it. The leverage is represented by the distance *a* that the lathe center projects beyond the face plate. The force of the face plate, which tends to lift the tail of the lathe dog, acts from the point of the center as a fulcrum and tends to bend the work down, as shown by the dotted lines. If the lathe center were longer, there would be a greater force tending to spring the work because of the increased length of leverage *a*.

40. When the tool begins to cut at the end *b*, the resistance of the cut at this point acts the same as if the work were clamped at this end as just described. This produces the same effect, though not so great, as clamping the end, for, with a tool, the strain can never be greater than that required to cut the shaving. As the tool feeds along, this resisting point approaches the point of the live center or the fulcrum from which the work bends. The result is that the amount of spring of the work will change. Here we have a changing force tending to spring the work; this force depends on the position of the tool along the work.

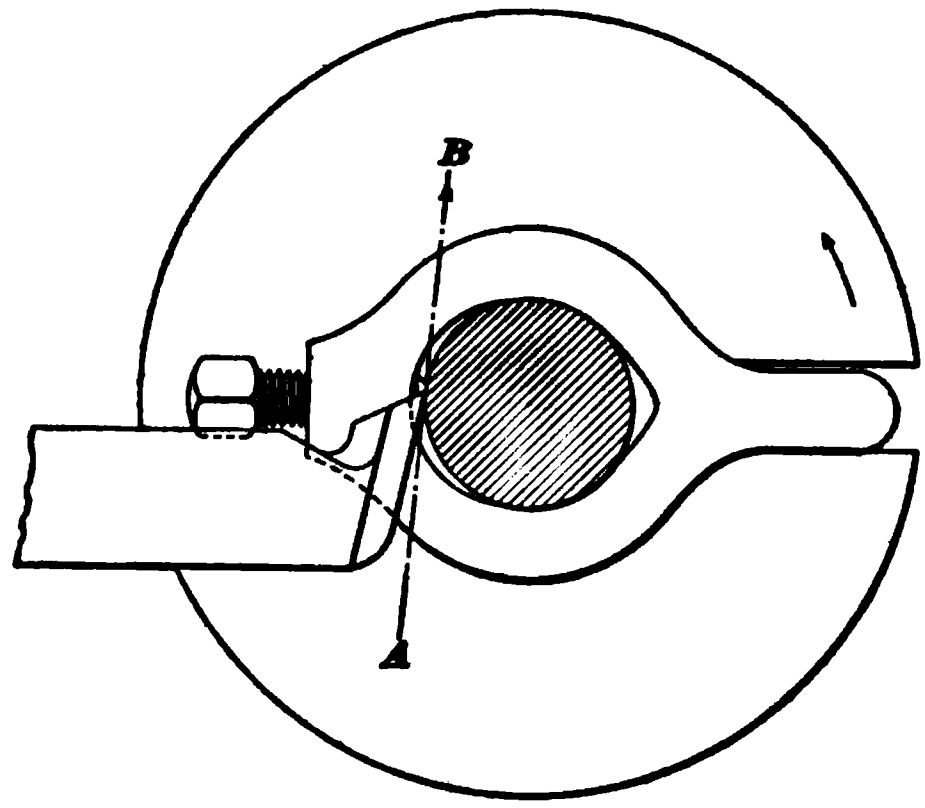

FIG. 11.

41. Suppose, in the next case, that the tool is cutting in a position midway along the length of the work. A section through the work is taken at this point, as shown in Fig. 11. This shows the tool at the front with the tail of the dog diametrically opposite. As the work revolves in the direction of the arrow, the force required to turn the shaving is made with an upward pressure of the tool. This force tends to

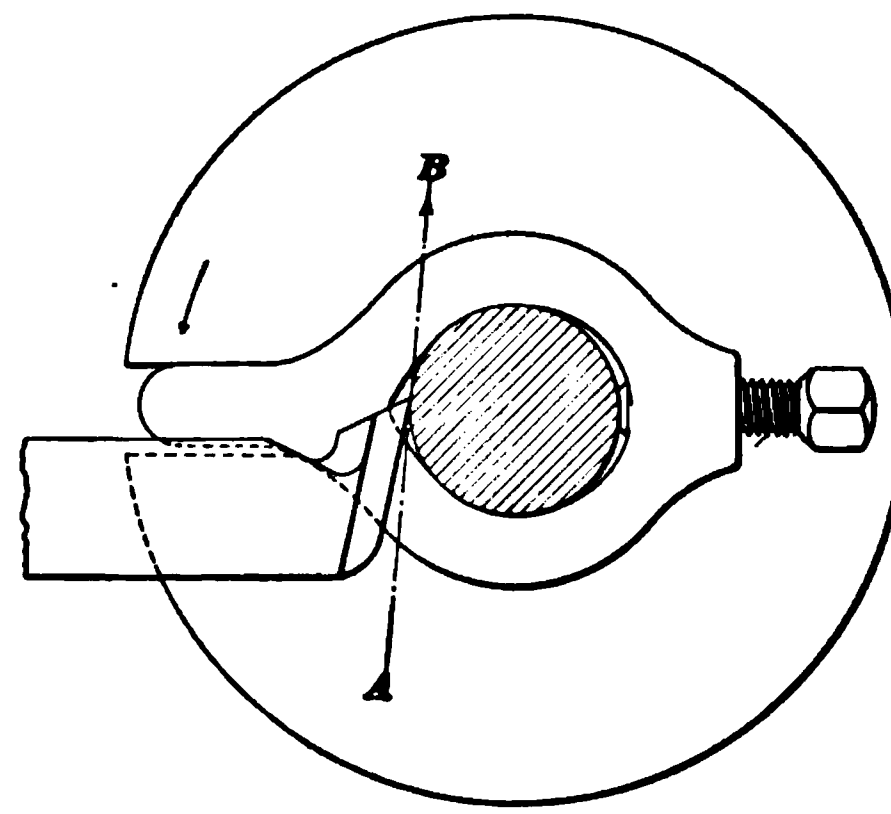

FIG. 12.

spring the work up in the direction of the arrow *A B*. The force required to revolve the work tends to spring the work down, since the dog is at the back of the lathe, and the forces act as shown in Fig. 10. In this case, we have two forces tending to spring the work in opposite directions and tending to balance each other—one, the force of the cut, the other, the pressure on the lathe dog.

Suppose the work makes half a revolution so that the tail of the dog is at the front, as in Fig. 12. While in this position we will have the force of the cut in an upward direction *A B* as before, but the pressure on the tail of the dog is now in the same direction. Hence, we have two forces, both tending to spring the work up. In the first case, it is the difference of the forces that tends to spring the work. In the second case, the sum of the forces acted to spring the work up. Here, again, because of the varying forces, various degrees of deflection occur.

42. When a straight-tailed dog and driving pin, as shown in Fig. 13, are used, the conditions are reversed, the effect of the leverage of the bent tail-dog being entirely eliminated, so that when the dog is at the back, both forces tend to spring the work up, and when the dog is at the front, the two forces are opposite and tend to balance each other.

CORRECT METHODS OF DRIVING THE WORK.

43. Straight-Tail Dogs.—Fortunately, these complicated strains arising from the ordinary methods of driving the work may be eliminated by changing the driving devices. The distortion shown by Fig. 10 may be remedied by using a straight-tailed dog and a driving pin in the face plate, as shown by Fig. 13. By this method, a joint is obtained between the pin and the dog. This breaks the leverage *a*, Fig. 10, and so eliminates that bending strain.

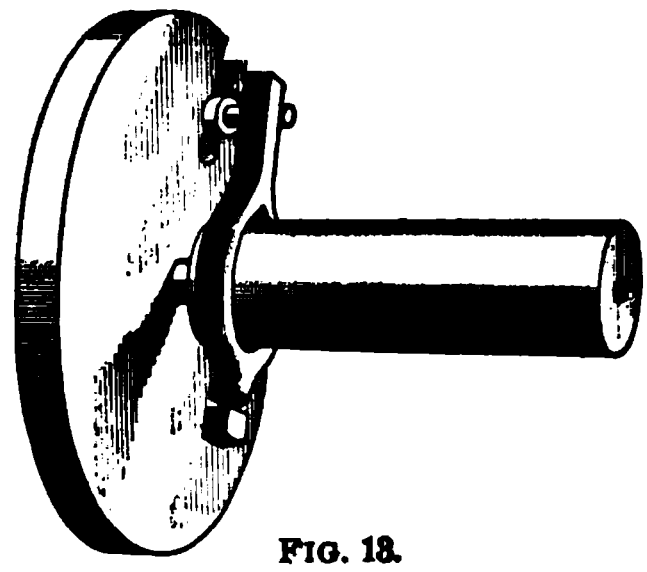

FIG. 13.

44. The variable forces represented in Figs. 11 and 12 may be balanced by using a two-tailed dog and two driving pins in the face plate, as shown by Fig. 14. When the work is thus driven, the two forces at the end of the dog balance each other, and the only force remaining that tends to spring the work is the upward force of the tool. If the pressures at the end of the dog do not balance, the same trouble that is found with the single-tailed dog will appear. Great care, therefore, is necessary in adjusting the driving pins in the face plate so that an equal pressure will be brought against each pin. This may be accomplished in some instances by moving one of the pins in the slot of the face plate in or out from the center. Since the tail of the dog and the slots in the face plate are not parallel, moving the pin toward the center will bring it against the dog, and moving it from the center will move it away from the dog. The pressure on the pins may be tested with pieces of paper put between the dog and the pins. The work is turned backwards by hand on the centers, to hold the dog against the pins, and the paper tested by pulling. Any inequality in pressure may thus be detected.

FIG. 14.

45. Equalizing Dogs.—Instead of adjusting the pins each time, an **equalizing dog,** Fig. 15, may be used. In this case, the dog is adjusted to the pins by tightening or loosening the screws *a*, *b*, as may be necessary. While it is very desirable to drive the work by the methods described, the difficulty in adjusting the dogs and the uncertainty that they will remain as adjusted do not warrant their general use. When some device can be used that will automatically balance or

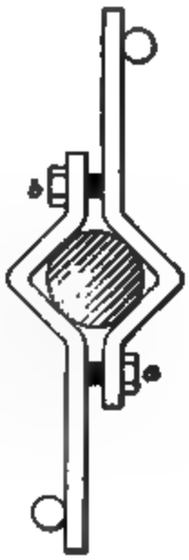

FIG. 15.

equalize the pressure on the pins, this method becomes more practicable. Many forms of equalizing dogs have been devised. They serve better for small than for large work. A very convenient and successful method of equalizing the pressure on the pins when the two-tailed dog is used, is by means of the equalizer or driver shown in Fig. 16. This consists of a plate carrying the driving pins *p*, *p*. This plate is fastened loosely to the front face of the face plate by means of bolts or studs screwed solidly into the face plate but fitting loosely in the long slots *s*, *s* in the driver. These studs keep the driver from slipping around on the face plate, but give it freedom to move a distance along the slots equal to their length. Suppose, in using, the greater pressure of the dog first comes against the top pin. The pressure would force the entire driver back, which would slide the lower pin up to the dog. As soon as the pressures balanced each other, the plate would stop sliding and continue to keep up the equilibrium.

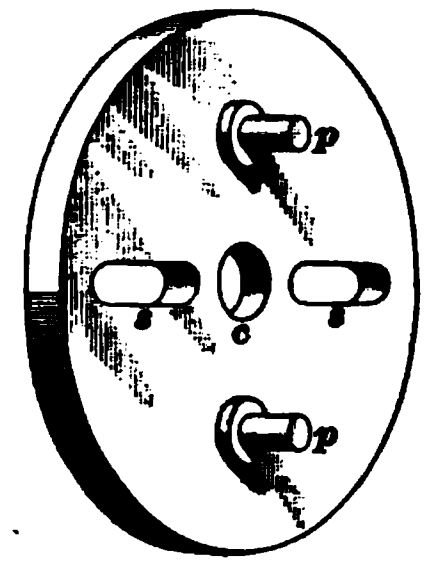

FIG. 16.

ERRORS IN THE MACHINE.

46. Poor Adjustment. — Imperfect work may often be traced to the poor adjustment of the machine or to the fact that the machine is much worn. When the lathe is much worn, it will be noticed that the spindle is slightly out of line with the bed and that it will not bore holes properly or face surfaces true. A great deal of wear comes upon the lathe bed at a part quite near the headstock, since the greater part of the work turned upon the lathe is short, and the carriage moves over this part more than any other. If the gibs that hold the carriage to the bed be adjusted so that the carriage is in good adjustment at this worn place, it will be found that when longer work is to be turned, the carriage will not slide easily along the unworn part of the bed

47. Accuracy of New Lathes.—In the manufacture of lathes, all parts are carefully tested to see if the line of the spindles is exactly parallel with the bed, the carriage square across the bed, and all parts correct. All these tests require that the lathe shall produce work within a limit of from .00025 to .001 inch, depending on the kind of work for which the lathe is to be used.

The accuracy of the machine is not so important as the skill of the operator, for a skilful and careful workman will overcome the inaccuracies of the machine, but the careless workman will have trouble even with the best machine.

LATHE CENTERS.

48. Shape of Lathe Centers.—Fig. 17 shows the most common form of lathe center. The sides *A B* and *C D* form an angle of 60° with each other and 30° with the center line. For very heavy work some prefer a blunter center, as shown in Fig. 18. This form is used because of its apparent strength, but while there is less danger of breaking the point of the center, it cannot hold work to run as truly as the 60° angle. The cause of the breaking of 60° angle centers is generally due to the imperfect fit in the center hole, which brings all the strain on the point of the center. When the centers are 90°, there will be a greater tendency to force the centers apart and out of the center hole, due to the weight of the work and the force of the cut, than if the centers are shaped as shown in Fig. 17. Suppose two pieces of work are being turned on lathes with these two forms of centers. If each center were backed out of its work the same

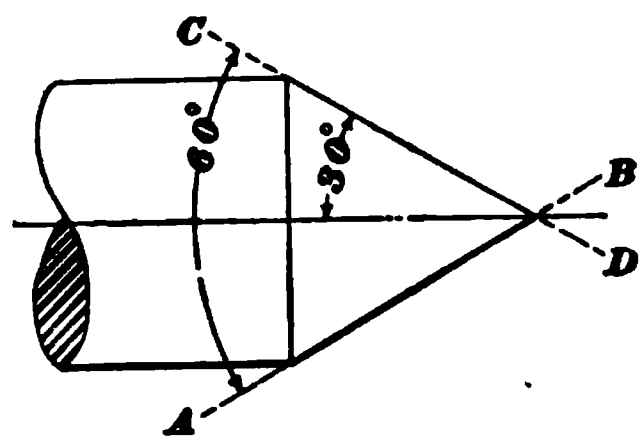

FIG. 17.

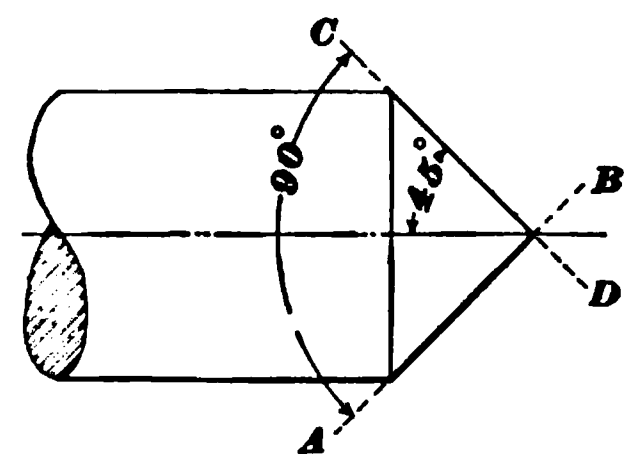

FIG. 18.

distance, the work on the 90° center would drop more out of line than the work on the 60° center; therefore, to keep the work up in line with the spindles, the adjustment of the 90° center must be closer than for the 60° center. Many builders of heavy machinery use a center having a 75° included angle in place of a 60° or a 90° angle. Such a center combines many of the good points of both of the other forms.

49. Necessity of True Centers.—The live center should run true in the headstock. The dead center should be sharp and smooth. If a live center were out of line so that its point wabbled slightly and a piece of work were turned on it, the work might be round and straight, but the turned part would not be true with the center hole. A piece may be turned to various diameters and shapes on untrue centers and the different cuts may all run true with each other, provided they were all taken at one setting. If, however, the dog had been loosened and the work given a half turn, the dog being again clamped, the piece just turned will run out of true an amount double the error of the live center. When, therefore, a piece is partly finished on one machine and then taken to another for final finishing, it is necessary that the centers be true on each machine.

50. Hard or Soft Centers.—The dead center is always hardened and tempered. The live center may or may not be hardened. Some leading manufacturers prefer a soft live center, since it may easily be put in place and a very fine cut taken from it as it revolves in the headstock. This makes it practically true and little time is expended in truing it, but because of its softness, it is easily made untrue by bending or bruising. If a center, after being trued, is hardened and tempered and then put back in its place, it will be found that it no longer runs true, owing to the warping or springing of the center in the operation of hardening and tempering. To use hardened live centers successfully, they must be made true, as they revolve in the spindle, by

grinding. Sometimes the live center is hardened and the temper drawn to such a point that it can just be turned.

51. Grinding Lathe Centers.—To grind lathe centers, a properly constructed grinding machine should be used. There are very many forms of center grinders on the market that are sufficiently convenient to warrant their use in many shops. Fig. 19 shows a very convenient form and its application to the lathe. In setting this grinder in the lathe, the shank *a* is passed loosely through the tool post

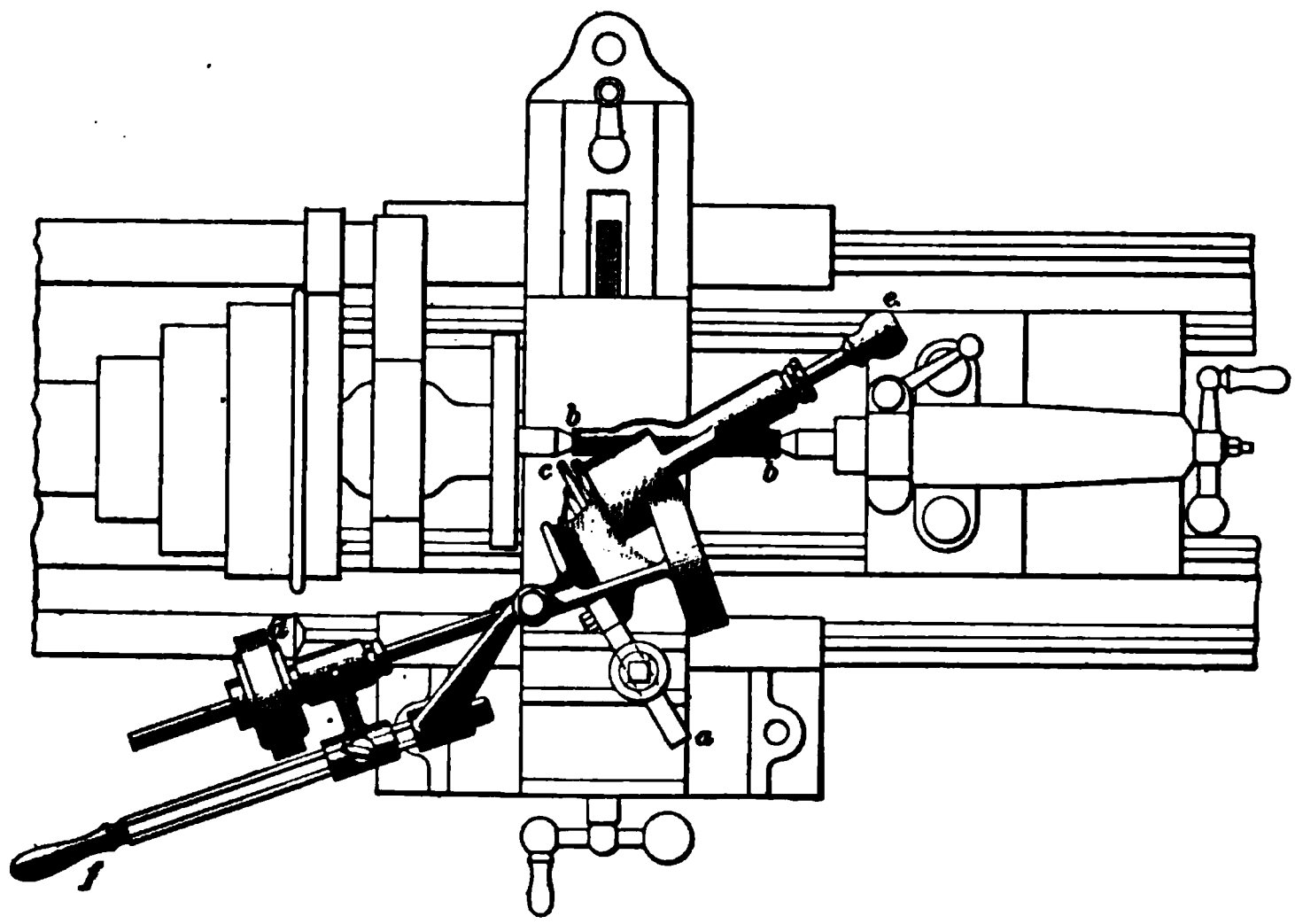

FIG. 19.

of the lathe, while the lathe centers come into the reamed center holes *b*, *b* in the grinder. These center holes have been so located that they hold the axis of the grinding wheel *c* at an angle of 30° with the axis of the lathe. After adjusting the rest to such a height that the shank *a* bears fairly on its bottom, it is clamped rigidly in the tool post. The dead center may be removed and the machine adjusted so that the emery wheel comes against the lathe center. A rubber wheel *d* is pressed against the cone pulley by the handle *f*. The lathe is run at its fastest speed backwards,

while the emery wheel is moved along the face of the center by moving the shaft operated by the knob *e*.

52. When both centers are to be trued, the dead center should be trued first. It is put in the place of the live center, and, while there, ground smooth and true. It is well to polish the dead center with emery cloth and oil. The live center may next be ground and left in place after grinding, so that it will run true. Before grinding or truing a center, great care should be taken that the center hole in the spindle is very clean before the center is put in place. If any dirt or specks of shavings are between the center and the hole, it will hold the center away at that point and make an incorrect fit. The center might be trued while in this position and it would run true until the dirt was removed, whereupon it would at once be untrue.

53. Removing the Live Center. — Live centers should never be removed from the spindle of the lathe unless it is absolutely necessary. When chucks are used on lathes, and rods are passed through the spindle, it becomes necessary to remove the centers. If only for plain chuck work, the center hole should be plugged with waste, as it is very difficult to clean the dirt that accumulates from the spindle when the hole is left open.

It is often the case that the center hole in the spindle is not absolutely true and that if the center be true in one position in the hole, it would run untrue if given a part of a revolution to another position. In such cases it is best to mark a line along the length of the lathe center *b*, Fig. 20, and draw a radial line *a* on the nose of the lathe spindle. The center

FIG. 20.

can always be put in the same relative position to the spindle by making the marks *a* and *b* coincide, as shown. After lathe centers are once made true, they should be cared for. Care should be taken to keep the dead center well oiled. When the live center appears to be true, but has not been recently ground, its truth may be tested by using an indicator. These indicators will be described later.

54. Lining Lathe Centers.—In order to turn work properly between the lathe centers, it is necessary that they be "in line" with each other and with the line of tool motion. If the centers are much out of line, as they would be after turning a taper, they may be roughly set by placing the dead center very close to the point of the live center and adjusting until the points appear to be opposite, or the dead center may be set by the use of the scale or zero mark on the tailstock. To adjust the dead center still further, a test bar about 1 foot long may be used. It is carefully centered with its ends each finished to some one diameter, while the middle portion is slightly reduced. This bar is held between the lathe centers and the tool adjusted to touch the bar at the live-center end. After the tool is thus adjusted, the carriage is moved to the dead-center end and the tailstock adjusted so that the tool just touches the bar at this end. Instead of using a tool in the tool post, an indicator may be used. This will indicate how much the centers are out of line. After the centers are lined, the work being turned should be carefully calipered as the cut proceeds, to be sure that the "lining" was correctly done.

55. Wear of the Tool.—Sometimes when the centers are correctly lined, the work may be slightly tapered, growing larger at the headstock end, owing to the wearing away of the point of the tool, thus making the work larger.

ERRORS IN SCREW CUTTING.

56. Errors Due to Imperfect Leadscrews.—The chances for error in cut screws in the lathe are numerous. The chief error is the inaccuracy of pitch due to an imperfect

leadscrew. The best remedy for this sort of error is to use a leadscrew that is known to be perfect within a given limit. All the lathes in a shop should be tested, and all particular screw cutting given to those that have the most perfect leadscrews. In cutting long screws, the work frequently becomes heated above the temperature of the leadscrew. The result is that the screw being cut will be short when cool. The remedy is to keep the work cool with plenty of oil or water.

57. Cutting Taper Threads. — In cutting taper threads, the taper attachment should be used. *A true*

FIG. 21.

taper thread cannot be cut by setting over the center. If the point of a thread be followed around a screw, it will be found to follow in the line of a true curve. This curve, which is made by the sharp point of a V thread, is called a **helix.** If a thread should be so cut that, in following this curve, it would advance rapidly along the screw for a part of a turn, and slowly for another part of the turn, the rate of advance not being uniform, then the thread would not be a true thread, but would be known as a *drunken thread.*

58. Suppose that it is desired to cut a very blunt taper by setting over the center, as shown in Fig. 21. Let Fig. 22 represent an end view of the same piece, with the tailstock

removed and the work still in position. Suppose the line *A B* be drawn through the axis of the work and through the lathe dog, as shown. It will be noticed that the notch in the face plate is slightly behind its perpendicular position. This is due to the angularity of the tail of the dog, caused by setting over the dead center. This angularity may be more clearly seen by reference to Fig. 21. Suppose we wish to give the work a quarter of a turn. As the work and the machine revolve, the tail of the dog slides into the notch of the face plate until it is directly at the front of the lathe in a horizontal position. At the end of the next quarter of a turn of the work, when the line *A B* is inverted, as shown in Fig. 23, it will be seen that the notch in the face plate has passed beyond the lower quarter point. After the next half turn, the work would be in the position shown in Fig. 22.

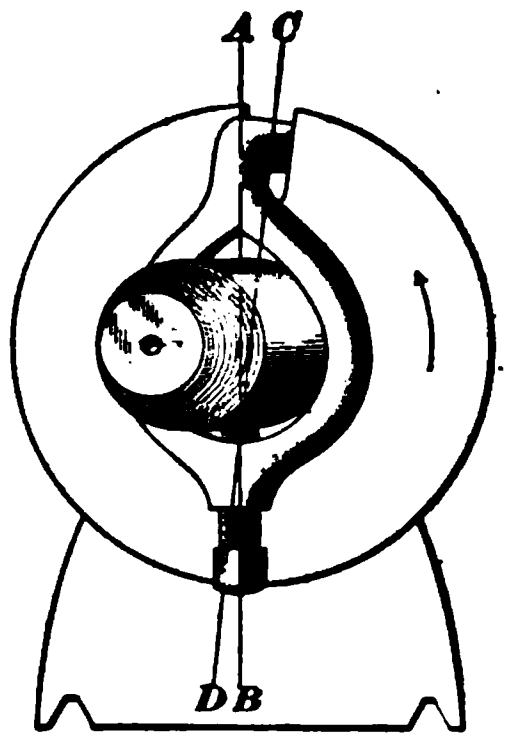

FIG. 22.

It will be seen that during the first half turn of the work, the lathe or face plate made considerably more than half a turn, passing through the angle *a b c*, Fig. 23. During the second half turn of the work, the face plate did not make a complete half turn, as it only passed through the angle *c d a*. This shows that the work did not revolve at a uniform rate of speed with the lathe. While the lathe revolved at a uniform speed, the work first dragged behind and then accelerated until at the end of the revolution they were again together. The feed, however, would be moving the tool along at a uniform rate of speed. When this sort of action takes place in screw cutting, the screw cannot be of uniform pitch, but will be a *drunken pitch.*

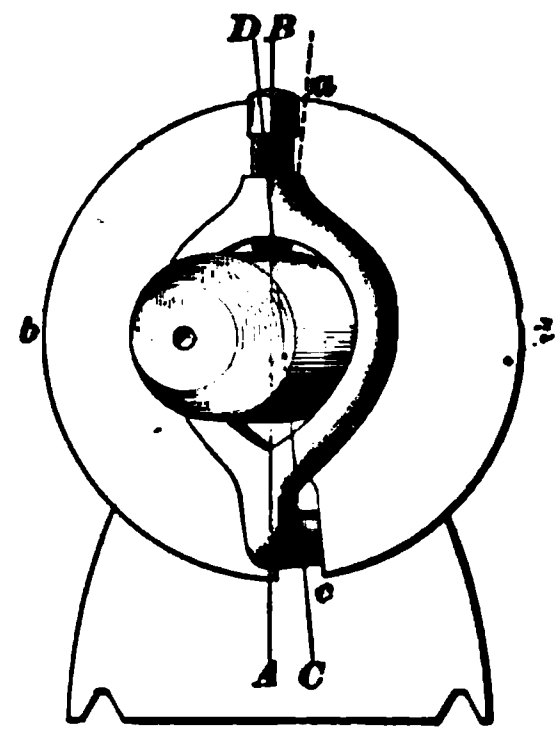

FIG. 23.

FITTING CYLINDRICAL WORK.

KINDS OF FITS AND THEIR USES.

59. Meaning of the Term Fit.—The expression "making a fit" may convey a number of meanings to the workman. It may mean that when two pieces are put together they will be free to slide over each other, or that they will be locked together. That which would be called a good fit in one instance would be a bad fit in another.

60. Kinds of Fits.—In ordinary machine construction, there are four kinds of fits commonly used. They are: (1) *working* or *sliding fit;* (2) *driving fit;* (3) *force fit;* (4) *shrink fit.* The first is used for parts that work or slide upon one another, such as shafts, spindles, etc. The last three are used when the parts are put together with the intention of their remaining in a fixed position.

SLIDING FITS.

61. Requirements for a Good Sliding Fit.—The most nearly perfect sliding or working cylindrical fits are those whose surfaces most nearly approach perfect cylinders. There must be sufficient difference in diameter to allow the shaft to revolve freely and to admit oil for lubricating. If the shaft and bearing were exactly the same diameter, the shaft might be turned in the bearing so long as it was kept slightly in motion, but as soon as it stopped, it would be very difficult to start it again. With such perfect fits, the heat that would be generated by the revolving shaft would cause it to expand so that it would be larger than the bearing, and this would change the sliding fit to a solid fit.

62. Allowances in Sliding Fits.—The closeness of the cylindrical fit depends on the diameter of the work, the length of hole, and the condition of the surfaces. Greater differences in diameter are allowed for large shafts

than for small ones. In some small machines, spindles about ¼ inch in diameter will require not over .0005 inch difference in diameter, while a shaft 12 inches would require from .005 to .01 inch.

63. Making Sliding Fits.—To make a good fit, the surface should be smooth and true. If the hole or bearing is finished by boring, the tool should be made to take a very smooth cut. If there is any danger that the work is sprung from the chucking, the pressure should be relieved as much as possible before taking the finishing cut. The work should be tested to determine if it is round and the sides parallel. Whenever it is possible to finish holes by reaming, it is best to do so. Reaming tends to make the holes a standard size and to make the walls of the holes smooth and parallel. When a working fit is being made, it is best to finish the bearing first, as it is easier to fit the shaft to the hole than to bore the hole to fit the shaft. When gauges are at hand, the "cut-and-try" method is done away with, since the holes are all reamed to pass the limit gauge and the shaft also is turned within limits, so that the pieces will fit each other with sufficient accuracy.

64. Standard or limit gauges are not always used, especially when but a few pieces of a size are to be fitted. In this case, the hole that has been finished must act as the gauge for the shaft. The closeness of the fit depends greatly, as before stated, on the smoothness of the surfaces. Suppose the bearing has been reamed, but the shaft finished with an ordinary finishing cut, and the shaft just slides easily into the bearing. A section through the work showing the conditions of the fit is shown in Fig. 24. Here the bearing touches only upon the points of the tool marks, which are shown in somewhat exaggerated form in the figure. It

FIG. 24.

may be seen that if such a fit were allowed to pass, it could not wear long, since the pressure would come on the points of the tool marks, causing them to wear away rapidly. Furthermore, because of the spiral threads or tool marks around the work, it would be difficult to keep the bearing lubricated, the spiral thread tending to drive the oil out of one end or the other of the bearing, depending on the direction of the rotation of the shaft. Because of a lack of oil and the narrow bearing points, such a fit would soon wear loose.

This same wearing action would take place if the shaft were smooth and true, but the bore left with clearly defined tool marks.

65. To make the fit as it should be, the shaft should be turned with a smooth cut to such a diameter that it would not quite enter the hole because of the projecting tool marks. These tool marks should be carefully removed by filing or by grinding. The best class of work is now being finished on grinding machines, since this method finishes the work smooth and true and in less time than it can be done by filing. When, however, it is necessary to fit by filing, care should be taken that it is evenly done. If the turning is correctly done, it will need only a few strokes of the file to remove the desired amount. The less filing necessary after the tool marks are removed, the better the chances for a good fit.

DRIVING FITS.

66. Meaning of the Term Driving Fit.—In a **driving fit** the plug or shaft is made slightly larger than the enveloping piece, and they are put together by driving. This method is used when the two pieces are intended to keep a fixed position in relation to each other.

67. Allowances for Driving Fits.—The **allowance** for driving, which is the difference in diameter, depends on the diameter of the work, the lengths of the holes, the condition of the surfaces, and the strength of the enveloping

piece. If the holes are long, less difference in diameter is required than when the holes are short. When the hole and the shaft are each finished smooth, a very slight difference in diameter makes a great difference in the closeness of fit. If the surfaces are rough, a much greater difference in diameter is allowable. When the surfaces are smooth, a difference of from .0005 to .001 inch will make a very tight fit on work about 1 inch in diameter, while for such a fit as shown in Fig. 24, where the surfaces are rough, a difference of .002 or .003 inch will be necessary. When these rough pieces are put together, the roughness of the faces is worn down as they are driven over each other, so that, if they should be driven apart, the surfaces would be found to be much smoother than before.

68. Making a Driving Fit.—When putting pieces together with a driving fit, the surfaces should be oiled. The piece into which the shaft is to be driven should be set upon a firm foundation and the shaft driven to place with a hammer or sledge. Care should be taken not to bruise the work when driving it; consequently, a block of wood or lead is used to strike upon. Sometimes the work is of such shape and in such a position that a *ram* can be rigged for driving the pieces together. This consists of a beam supported from above by ropes or chains so that it hangs in a horizontal position, level with the work. The beam is drawn back and then pushed forwards so that its end strikes against the work. This makes a very effective way of driving. If the work is large and the fit is very close, the driving may be helped by using clamps and bolts, which can be arranged to assist in drawing or forcing the pieces together. With the combined forces of the bolts and the ram, the shaft can be driven to place.

FORCED FITS.

69. Use of Forced Fits.—When the work is large, and there is a large amount to be done, the pieces are forced together by hydrostatic pressure. When fits are prepared

to be put together in this way, they are called **forced fits.** This method of putting pieces together is used for putting engine cranks on shafts, or for putting crankpins in the cranks, and for a great variety of similar work. It is probably used more extensively for putting the wheels on car axles than for any other purpose.

70. Allowances for Forced Fits. — The allowance for forced fits is a little more than for driving fits. The amount, however, depends on the materials used, the size of the hole, its length, and the condition of the surfaces. It is the practice of some engine builders, who put the cranks and crankpins together with forced fits, to allow about .0025 inch difference for each inch in diameter. This requires a pressure of from 10 to 13 tons per inch in diameter, depending on the length of the hole, to force the pieces together. This pressure is estimated for diameters that range from 3 to 8 inches.

In fitting car wheels and axles, they are required to go together within the limits of certain pressures. One railroad company requires that, for certain classes of wheels, the pressure required to force the wheel on to the axle shall not be less than 25 tons nor over 35 tons. On an axle 7 inches long and $4\frac{7}{8}$ inches in diameter, an allowance of about .007 inch is made. This requires a pressure of about 30 tons to press the wheel on.

71. Making a Forced Fit. — Considerable skill is required by the workmen to make these fits, yet, after a little practice, they do it rapidly and can tell within a few tons the exact pressure that will be required to force the wheel into place. In calipering the axles, the exact difference is not always measured by the workman. He may use a snap gauge that has been made sufficiently large to allow for the fit; or, if calipers are used, he may set them the correct size and test the work so that a certain pressure is required to force them over the work, experience having taught him how great this pressure should be.

SHRINK FITS.

72. Meaning of the Term Shrink Fit.—A shrink fit refers more particularly to the method of putting the parts together than to the fit itself. The pieces are prepared in much the same way as for the forced fit. When the pieces are put together, the outer piece is heated, which expands the hole sufficiently to let the plug drop in. When the outer piece again cools, it contracts sufficiently to grip the pin with great force.

73. Use of Shrink Fits.—When the pieces are large and strong and of certain shapes, pressure may be used for putting them together without danger of bending or distorting them. On other classes of work there is no chance to drive or force the pieces together; for example, putting the tires on locomotive wheels. For such large diameters, the difference of diameter in the fit would be so great that it would be difficult to start the tire on the wheel and very powerful presses would be required. By heating the tire, it expands sufficiently to let it drop over the wheel center with perfect freedom. Shrink fits are very often employed on small work in shops that have no press to put forced fits together.

74. Allowance for Shrink Fits.—The amount of allowance for shrink fits is generally a little more than for forced fits. A fair rule for small work in making shrink fits is to allow about .003 inch for the first inch in diameter and to add .001 inch for each extra inch. The amount allowed for locomotive drivers varies, depending on the size of the wheel and the service. Most locomotive builders allow from $\frac{1}{100}$ to $\frac{1}{80}$ inch to the foot in diameter.

75. Assembling Shrink Fits.—In making a shrink fit, the piece that has been bored is heated slightly and evenly. Ordinarily, a heat just sufficient to show a dull red is more than is required. Care should be taken that the piece is never hot enough to scale. The diameters should previously be tested so that there will be no danger that the pieces will not go together when one is heated. If too much

allowance has been made, the pieces sometimes catch before the shaft is quite through to the desired place. Unless it is instantly removed, it will bind so that it will be impossible to move it either way. This is because the shaft begins to expand as soon as it enters the bored piece, and if the difference in diameter is slight at first, it will be very quickly made up by the rapid expansion of the shaft. Thus, it may be seen that great speed is necessary in putting the pieces together when shrink fits are used. This is especially true on small work. When the pieces are larger, such haste is not important.

In shrinking smaller pieces, as soon as the plug is in place, water should be applied to keep it cool. The enveloping piece must not be cooled too suddenly or it is liable to crack, especially if it be cast iron. If a gear-wheel is being shrunk on a shaft and too much water is applied to the shaft and the hub of the wheel, there is danger that some of the arms will crack. If a cast-iron disk is being shrunk on a shaft and the circumference of the disk be rapidly cooled, there is danger that a radial crack will appear at the edge.

76. Building Up Large Guns.—There is probably no finer example of making shrink fits than that illustrated in the building of the large guns now constructed for the army and navy. These guns are built up, or made of a number of pieces. The first part is a long tubular piece the length of the gun. Over this tube is fitted and shrunk a number of bands or hoops called **jackets,** and over these is fitted another set of hoops. Great skill is required in turning the jackets and the tube so that when the jackets are shrunk on, they will exert a certain amount of compressive force. This compressive force varies along the length of the tube. A corresponding difference or allowance in the fit must be made to give the various pressures desired. The average allowance is from .0012 to .0015 inch per foot. It may be seen that great skill is required to bore and turn these pieces to the correct size, as a difference of from .001 to .002 inch may be sufficient to cause rejection.

When the jackets or hoops are put on a gun tube, they are first heated by wood or gas fires. When sufficiently hot, they are dropped over the tube standing on end in a pit. As soon as the jacket is in place, streams of water are turned on the tube to keep it cool and to cool the jacket.

LATHE ARBORS, OR MANDRELS.

SOLID ARBORS.

77. Meaning of the Terms Arbor and Mandrel. A **lathe arbor** is a shaft or spindle that may be used when turning the outside of bored pieces by driving the arbor into the bored hole and revolving it between the lathe centers.

The term **mandrel** is very commonly applied to the same article, but is also used for designating a piece or form about which the blacksmith forges a ring, tube, or collar, or for a center about which glass or any similar material is cast, the term *arbor* never being used in this latter sense. The term *mandrel* is also used to designate the support for a circular saw or milling cutter.

78. Shape or Form of Solid Arbors.—Arbors are commonly used on work having a bore of 3 inches in diameter or less. The best forms are the solid ones made from tool steel and hardened and tempered. Such an arbor is shown in Fig. 25. These arbors are made slightly under size at the ends, for the dog to be put on. The center holes should be carefully made so that they will not be injured by driving. Fig. 26 shows a section through the end of a properly formed center hole in a lathe arbor. It will be noticed that the edges of the center hole are well rounded. This form is given to

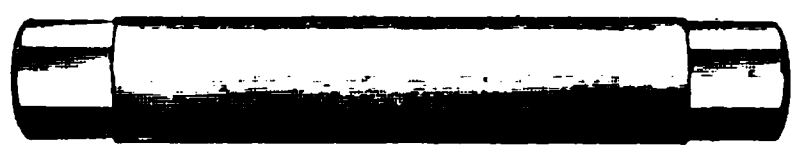

FIG. 25.

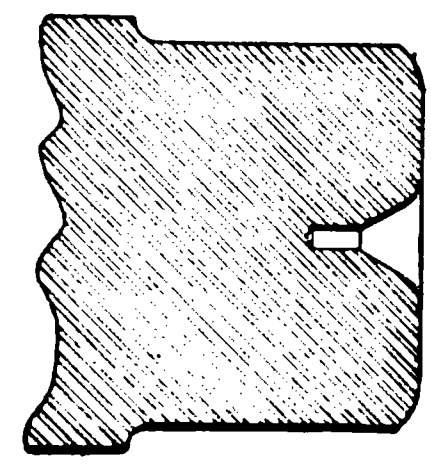

FIG. 26.

the center hole so that if the arbor is bruised on the end when driving, or from any other cause, there will not be so much danger of the center hole being destroyed. If the end of the arbor were flat and it should be bruised near the center hole, a slight bump would be raised on one side of the hole that would be sufficient to throw the arbor slightly out of line. To further preserve the center holes, the arbor is hardened. These center holes should be made with great care, the angle being 60°, so that they will exactly fit the lathe center. In the best made arbors, the center holes are ground true after hardening. The central portion of the arbor is carefully ground to size, being made slightly tapered.

79. The small end of the arbor is generally about the exact size, while the large end is from .002 to .003 inch larger, depending on the length of the arbor and the length of the work to be turned. The large end is distinguished by the size of arbor being stamped upon it. These arbors are ground to standard sizes and should fit holes reamed with standard reamers. The necessity of keeping them true may readily be seen when a pulley or similar piece is to be turned true with a part that has been bored and reamed. It is evident that if the arbor is untrue, the hole will run untrue as the work revolves. The rim or part of the work being turned will be cut true with the machine, but will not be true with the bore. When the finished pulley is placed on a shaft that runs true, the rim of the wheel will wabble. It may be seen that an untrue arbor will always produce untrue work and lead to a great deal of trouble.

Arbors may become untrue from the wear of the center holes and from their being sprung when driven into the work, or by taking too heavy a cut on the work for which they are used.

80. Care of Centers of Arbors.— Care should be given to the dead center when the arbor is being used, to keep it well oiled and to see that the arbor does not expand because of heat sufficiently to make it grip on the dead center. When there is danger of spoiling both arbor center

and lathe center, a bronze dead center may be used. The bronze is soft enough so that if the arbor becomes dry it will simply wear away the bronze without injury to itself. For certain classes of work, the accuracy of which would not be affected by having the dead center moved slightly during the cut, these bronze centers are very good, but, for the general run of work, it is better to employ steel centers and see that they are well lubricated and not set up too closely.

81. Putting Arbors in the Work.—When an arbor is put in a piece of work, it is usually driven in. The hole and the arbor are coated with oil, to keep the surfaces from cutting, and, while the work is well supported upon the driving block, the arbor is driven in with a soft-faced mallet or hammer. Hard-faced hammers should never be used for driving arbors. Babbitt or rawhide-faced hammers are the best. If the work is small, much driving is not necessary. Judgment should be used, as it will be found that, if the pieces fit well, it will take but little pressure to force the arbor into the work sufficiently to keep it from slipping. The practice of some workmen of driving an arbor as long as it can be moved is bad. When driving arbors, care should be taken to strike fair blows on the end, as untrue blows are liable to spring it.

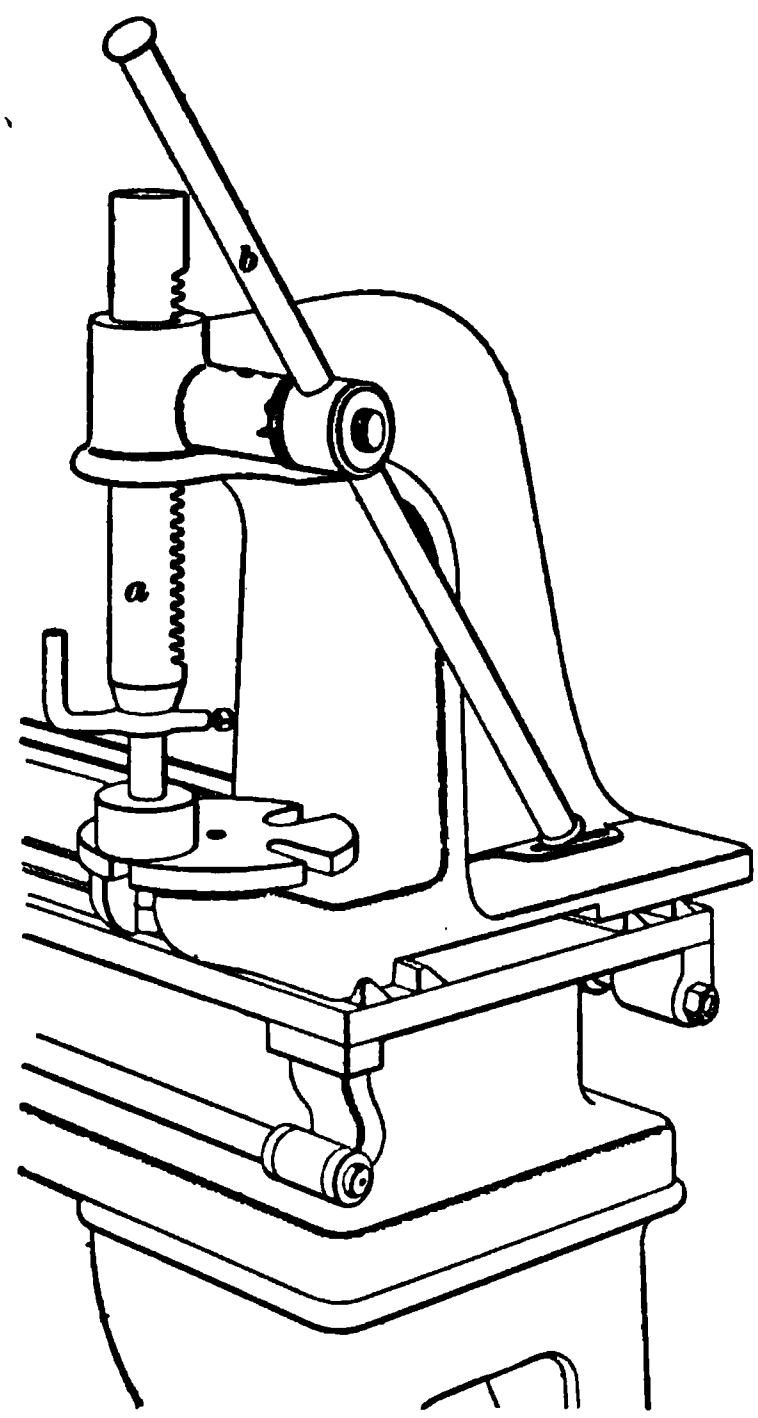

FIG. 27.

82. A far better way of putting arbors in the work

is by the use of an arbor press. Fig. 27 shows a style of press used for this purpose. It consists of a heavy cast-iron frame, to which is fitted a plunger *a*, which is operated by means of the hand lever *b*. When an arbor is to be pressed into a piece of work, the work and the arbor are brought under the plunger so that the arbor may be pressed in with a direct, uniform load. These presses are much more convenient for putting in arbors than the method of driving, and they also lessen the danger of springing the work. Sometimes an arbor may be sprung by driving it into a crooked hole, if the hole is long and the arbor slender.

After an arbor is driven into the work with a soft-faced hammer, the center hole should be carefully cleaned before the work is put between the lathe centers. Dirt in the center holes of an arbor has the same result in making work untrue as untrue lathe centers.

83. Heavy Cuts on Light Arbors.—Very often an arbor is sprung by taking too heavy a cut. This is particularly true if the work is large. For small work, the arbor will have sufficient friction in the work to drive it so that a dog may be put on the arbor, but if the work is large and the bore is small, the arbor will not have sufficient friction to drive it. The arbor can then only be used to support the work, while the driving should be done by means of a pin or stud on the face plate. When the work is thus driven, it makes it possible to take heavy cuts, but if a deep, heavy cut be taken on the outside of a large piece supported on a small arbor, the side thrust of the tool will act with such a leverage on the work that it will spring the arbor. Light cuts, therefore, must be taken.

84. Cutting Close to Arbors With a Tool.—When cutting close to an arbor with a side tool, as is the case when facing hubs or similar work, care should be taken not to cut into the arbor with the tool. While the arbor may be hardened, it is not always harder than the tool point.

85. Cast-Iron Solid Arbors.—When solid arbors of large size are to be used, they are sometimes made from

cast iron. The ends of such an arbor are drilled and steel plugs fitted for the center holes. These plugs are hardened after the center holes are correctly made and driven or screwed into the cast-iron arbor. When cast-iron boring bars are made, it is better to use hardened-steel center plugs.

EXPANDING MANDRELS.

86. Advantages of Expanding Mandrels.—While the hardened solid steel arbor is the best form, there are inconveniences that arise from its exclusive use. In order to be prepared for all sizes of work, a very large stock of arbors would be necessary. This leads to inconvenience in some shops, while in other shops it is beneficial. Shops doing a great variety of work where all sizes of holes are bored, demand an arbor or mandrel that can be adjusted to slight differences of diameter. Shops that are making a particular line of work where many pieces are turned to the same size are benefited by using the solid arbor; *first*, because it is more accurate in itself; and, *second*, it acts as a second check-gauge on the work. If a piece that has been bored too large gets into the lot, it cannot be finished, since the arbor will not hold the work. When the cost of keeping a lot of arbors up to a standard size is considered, the type of arbor that will expand within certain limits and fit all sizes of holes within these limits is much cheaper than a great stock of solid arbors.

87. Types of Expanding Mandrels.—A number of types of **expanding mandrels** are on the market. Fig. 28

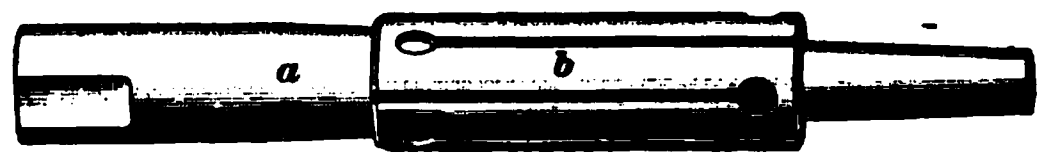

FIG. 28.

shows one type of expanding mandrel. It consists of a tapered arbor *a*, which fits into a tapered split bushing *b*. The bushings are ground round and parallel on the outside.

As the tapered mandrel is driven into the work and the bushing, the latter expands, thus filling the hole. The method of splitting the bushing as here shown allows it to spring and expand evenly within quite a wide range of limits.

88. Another form of expanding mandrel is shown in Fig. 29. This consists of a steel arbor that has been centered with the same care found necessary in solid arbors.

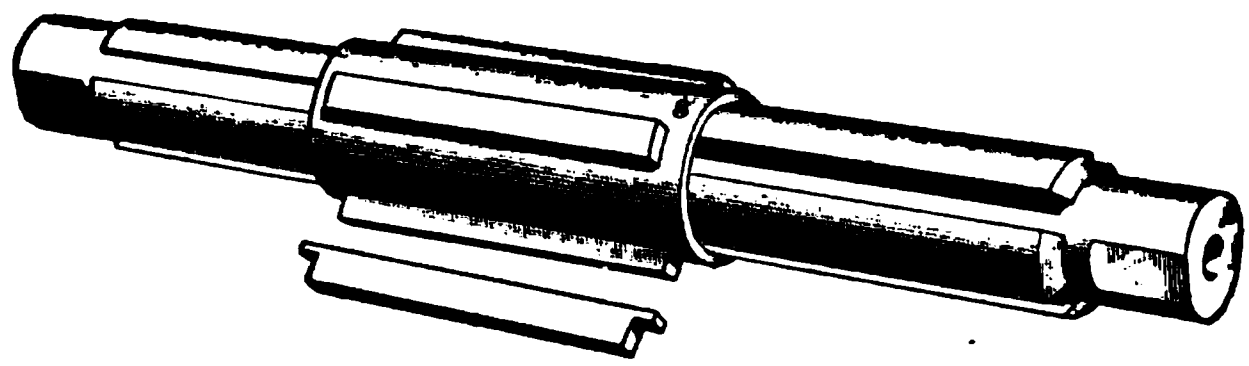

FIG. 29.

Four rectangular grooves are cut along its sides, these grooves being cut deeper at one end than at the other. A sleeve *s* fits nicely over the arbor. This sleeve has slots cut in its sides, which come opposite the grooves cut in the arbor. A hardened-steel jaw is fitted into each groove and slot. As the sleeve moves along the arbor, it carries the jaws with it, and, because of the varying depths of the slots, the jaws are moved in or out, depending on the direction the sleeve is moving upon the arbor. With this type of mandrel, different sets of jaws of different heights may be used, which will give it a range for different sizes of holes. When the work is thick enough to be stiff, so that it cannot be sprung, these mandrels are very convenient, but if the work on the mandrel is slender, there is danger of springing it, due to the outward pressure of the four jaws.

89. Cone Arbors.—For some classes of work, a cone mandrel, as shown in Fig. 30, is used. This consists of the arbor part *a*, to which are fitted two cone-shaped pieces *c*. One piece is held from sliding along the arbor by the shoulder *s*. The work is placed between the cones, and the

second cone tightened against the work *w* by the nut *d*. The cones are kept from turning on the arbor by keys. This

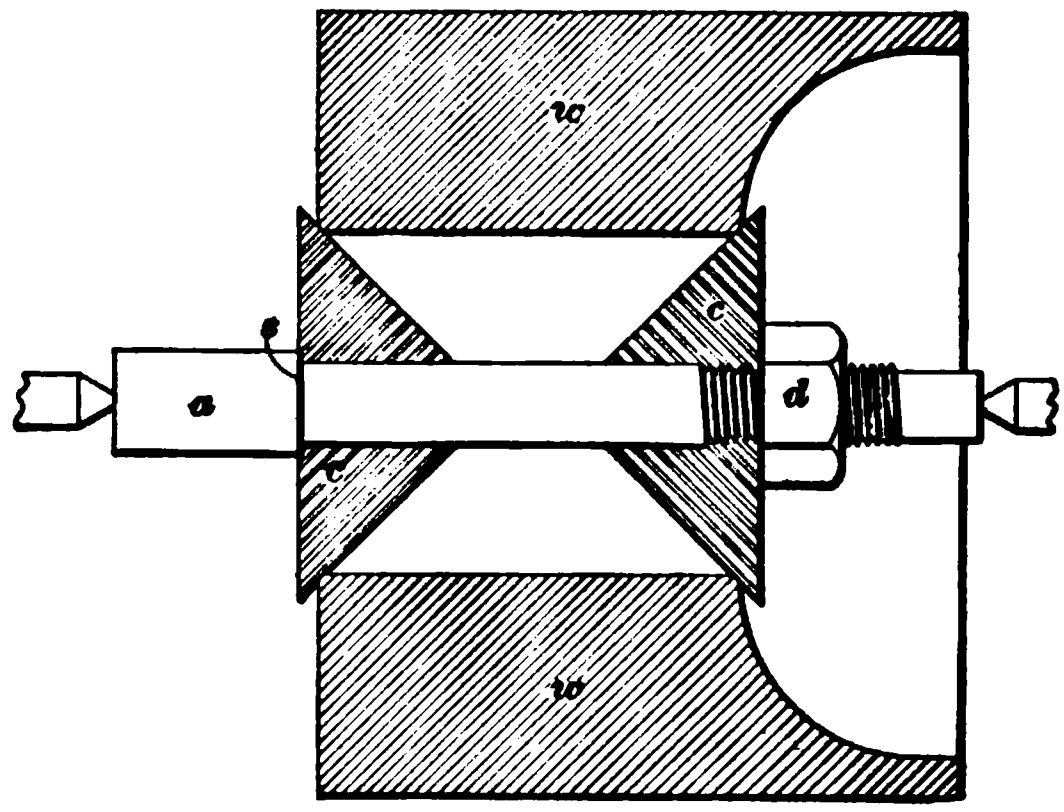

FIG. 30.

is a very convenient way of holding work to be turned that does not require great accuracy.

90. Special Expanding Arbor. — Fig. 31 shows another form of arbor for carrying bored or cored work that is being turned and faced. A heavy bar is drilled and tapped so that screws may be put in around the bar, as shown

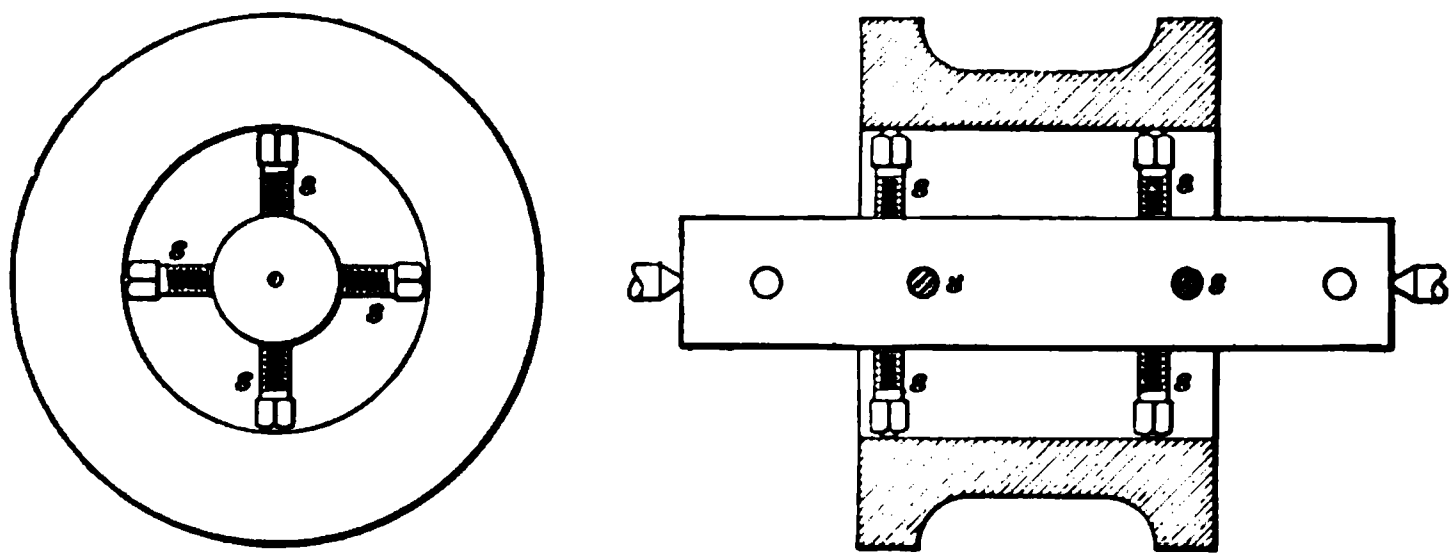

FIG. 31.

at *s*, *s*. The circles around the bar in which the screws are placed are at such a point that the screws come near each end of the work. The work is adjusted and held in place by

unscrewing the screws from the bar, thus bringing the pressure on the heads of the screws.

91. Bridges in Castings.—When heavy cast work has a tapered cored hole that would make it difficult to use the arbors just described, it is very good practice to cast a bridge across the end in which the center hole may be placed. Such a bridge is shown at *b*, Fig. 32. A similar bridge should be cast at the other end of the work. After the turning is done, these bridges can easily be broken out if so desired.

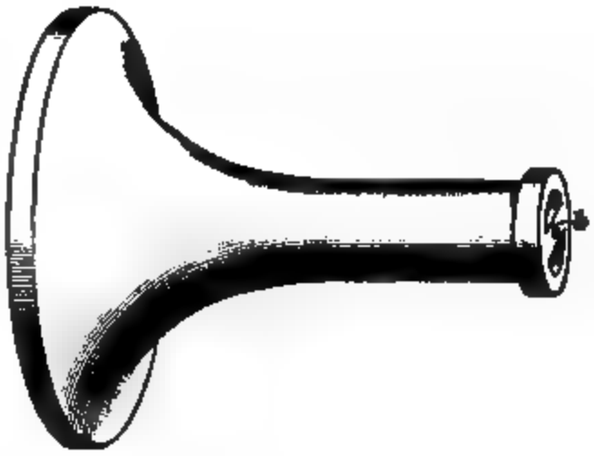

Fig. 32.

NUT ARBORS.

92. After a nut is tapped, it is still further finished by facing so that it will be true with the thread. This facing is usually done by screwing the nut on an arbor that has been threaded up to a shoulder. Such an arbor is shown in section in Fig. 33 with the nut in place. It will be seen that if the nut has not been tapped squarely and that if it fits loosely on the arbor, it will first come against the shoulder at the point *a*. As soon as this point touches, the nut will be rocked on the thread so that the axis of the nut thread will not be parallel to the axis of the arbor. If the nut should be faced while in this position, the face would not be true with the tapped thread.

Fig. 33.

93. To overcome this difficulty, some sort of equalizing washer must be put between the shoulder of the arbor and the nut, so that the nut cannot be thrown out of line, but will be held back squarely against the threads. Such a device is shown in section by Fig. 34. The shoulder of the arbor is rounded to a spherical shape, while the equalizing washer is concaved to fit the round end of the arbor. This makes a joint similar to a ball-and-socket joint. When the

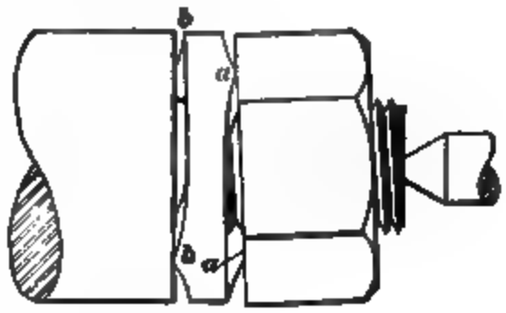

FIG. 34. FIG. 35.

nut *n* is screwed against the washer *w*, and it bears heavier on one side than the other, the washer at once rocks on the rounded end of the arbor and adjusts itself to the face of the nut. Sometimes an equalizing washer, as shown in Fig. 35, is used. The shoulder of the arbor in this case is squared. On one face of the washer are two projecting points *a*, *a* diametrically opposite each other. On the other face of the washer are two other points *b*, *b* diametrically opposite, but quartering with those on the first side. When the nut is screwed against the washer thus supported, it is free to rock in any direction, with the result that it centers itself with its threads and not with the face of the arbor.

FIG. 36.

EXAMPLES OF SPECIAL LATHE WORK.

94. Ball Turning.—In order to turn balls in engine lathes, special appliances are necessary to regulate the feed. Fig. 36 shows such an arrangement applied to turning a large cast-iron ball for an engine bearing. The mandrel *b* is supported on the lathe centers and driven by drivers on the face plate *c*. The ball *a* is made in sections, which are clamped to the mandrel *b* by the iron bands *d*. If a circle is revolved about a diameter, it will generate part of a sphere. This is practically the principle that is used in turning this ball, as the tool *e* moves in a circle around the work while the work rotates with its axis as a diameter of the circle in which the tool revolves. On the stationary table *f*, the rotating circular table *g* is pivoted and carries with it the upright *h* that supports the tool post *j* and tool *e*. At *k*, on the rotating table *g*, is a wrought-iron band that is fastened by capscrews at one end to the table *g*. The other end is fastened to the lathe carriage *m*, and as the lathe turns the carriage is fed away from the tailstock toward the end of the lathe, drawing with it the band *k* and thus rotating the table *g* about its axis. As the work rotates in the lathe the tool moves around it in a circular arc, so that it is always the same distance from the point on the axis that is the center of the sphere.

On smaller work, a method similar to this is used, but the tool is carried on a table that has a worm-wheel fastened to it and is rotated by a worm. The worm may be operated by hand or from the feed-mechanism of the lathe.

95. Turning a Crank-Shaft.—One method of holding a large crank-shaft in a lathe while turning its crankpins is shown in Fig. 37. The crank-shaft *c* is so fastened that the center line of the crankpin *d* coincides with the center line of the lathe spindle. The clamp *b* that holds one end of the shaft is fastened to the face plate *a*, and the clamp *f* that holds the other end of the shaft has an offset center *g* into which the dead center *i* of the lathe fits. The counterweight *w* is fastened to one side of the face plate to balance

the weight of the shaft. The crankpin *d* is turned while the shaft is held in the position shown. In order to center the shaft so as to turn the pin *e*, the end of the shaft next the tailstock must be blocked up, the clamp *b* loosened from the shaft, and the dead center removed from the clamp *f*.

FIG. 87.

The shaft is then rotated till the center *h* on the clamp *f* comes to the dead center, when the center is moved into *h* and the clamp *b* made fast to the shaft. The centers *g* and *h* on the clamp *f* hold the same relation to one another and the shaft as do the center lines of the crankpins. When the shaft is fastened in this position it is ready for turning the crankpin *e*.

96. Cams.—Cams are usually made on the milling machine, but they may sometimes be turned in a lathe. A templet is made with the same outline the cam is to have when finished, and fastened to the cam-blank. The screw in the cross-slide is removed so that the tool post is free to slide back and forth across the lathe saddle. A weight holds the tool against the work as it revolves with the templet. The tool is kept in the correct position by a stop, which slides on the templet. This stop causes the tool post to

slide in and out across the lathe carriage as the stop follows the outline of the templet. This process is not very rapid, but it will cut cams as accurate as the templet can be made.

97. Laying Out Centers for Turning Crank-Shafts.—The process of locating and preparing the centers for a solid crank-shaft is illustrated by Fig. 38 (*a*) and (*b*).

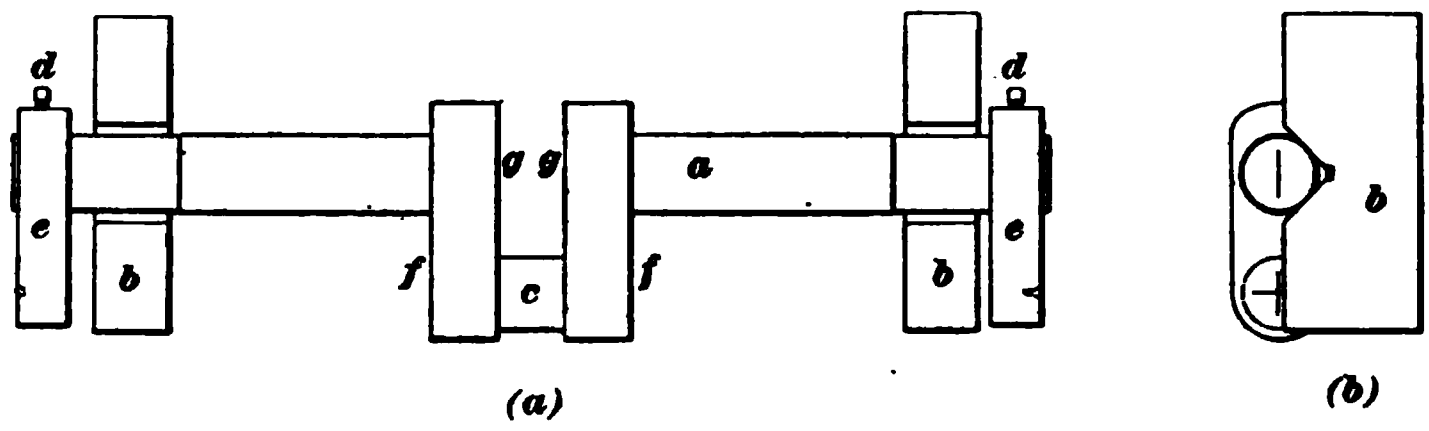

FIG. 38.

The crank-shaft *a* is centered and the ends turned to size for a short distance, to receive the centering blocks *e*, *e* and to fit the V blocks *b*, *b*. The shaft is then placed on V blocks *b*, *b* on a surface plate and the centering blocks *e*, *e* are fastened to the finished ends in line with the crank-arms. These centering blocks are bored out to a good fit on the turned ends of the shaft and are fastened, so that they cannot slip, by the setscrews *d*, *d*, or in some cases by keys. The shaft is then rotated until the center of the crankpin is the same distance above the surface plate as the center of the shaft and is blocked in this position. A horizontal line across the ends of the shaft through its center and across the arms *e*, *e* is then drawn with a surface guage. The center of the crankpin *c* is somewhere on this line and can be laid off with the scriber or a pair of dividers by taking a length equal to the distance from the center of the shaft to the center of the crank and laying it off from the center of the shaft. When the centers are located on both ends, they are drilled and countersunk. The shaft is then ready for the lathe and all the lathe work can be completed both on the shaft itself, on the crankpin, and on the crank-arms. The shaft is turned and the sides *f*, *f* of the crank-arms are faced when the work is on the centers in the ends

of the shaft. It is then moved to the centers for the crank-pin *c* using the centering blocks *e*, *e* with the centers laid off on them and is turned and the sides *g*, *g* of the crank-arms are faced. If the crank-arms are circular disks, they may be turned on the outside with a center midway between the other two centers.

98. Turning Ovals.—In turning circular work in the lathe, the distance between the center of the work and the point of the tool remains constant. By referring to Fig. 39, it will be seen that if *a b c d* represents a circle with the center at *o*, and that if the tool were located at *a*, that as the work revolved and *b* approached *a*, so long as the distance from the center *o* remained constant the work would be turned to a circular form, but if by any means the center *o* could be made to approach the point *a* as the work revolved during one quarter of a revolution and recede from it during the next quarter, advance during the third quarter and recede during the fourth quarter, it would be possible to turn an oval. For instance, if while the portion of the work from *a* to *b* were passing the tool at *a*-the center of the work *o* could be moved toward the circumference a distance equal to *b e*, the tool would cut along the curve *a e* of the ellipse *a e c f*. This is accomplished in a chuck for turning ovals by arranging a slide across the face plate and so adjusting the parts that it will move the work in or out across the face plate so as to produce the desired oval.

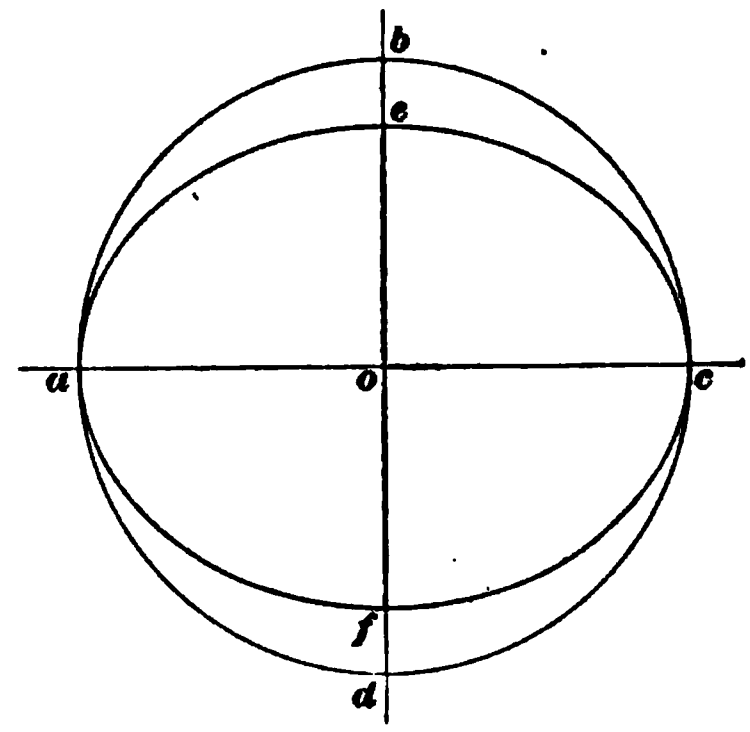

FIG. 39.

An attachment for turning ovals is illustrated in Fig. 40, where it is shown attached to an ordinary lathe headstock. The work is secured to the plate *a*, or held in the chuck upon a threaded spindle *b*. Back of the plate *a* there are

two slides at right angles to each other. These are shown at *c* and *e*. The disk *d* has a long projection that reaches through and is attached to the regular lathe spindle of the headstock. The disk *d* acts as a driver for the plate *a*, the driving being done by means of the slide *c*. The slide *e* is secured by guides to the slide *c*. The slide *e* is also turned out on the side toward the headstock to receive a ring that is carried on the piece *f*. When the center of this ring is made to coincide with the center of the lathe spindle, the plate *a* and spindle *b* rotate as in an ordinary lathe; but if the piece *f* is moved across the lathe by means of the

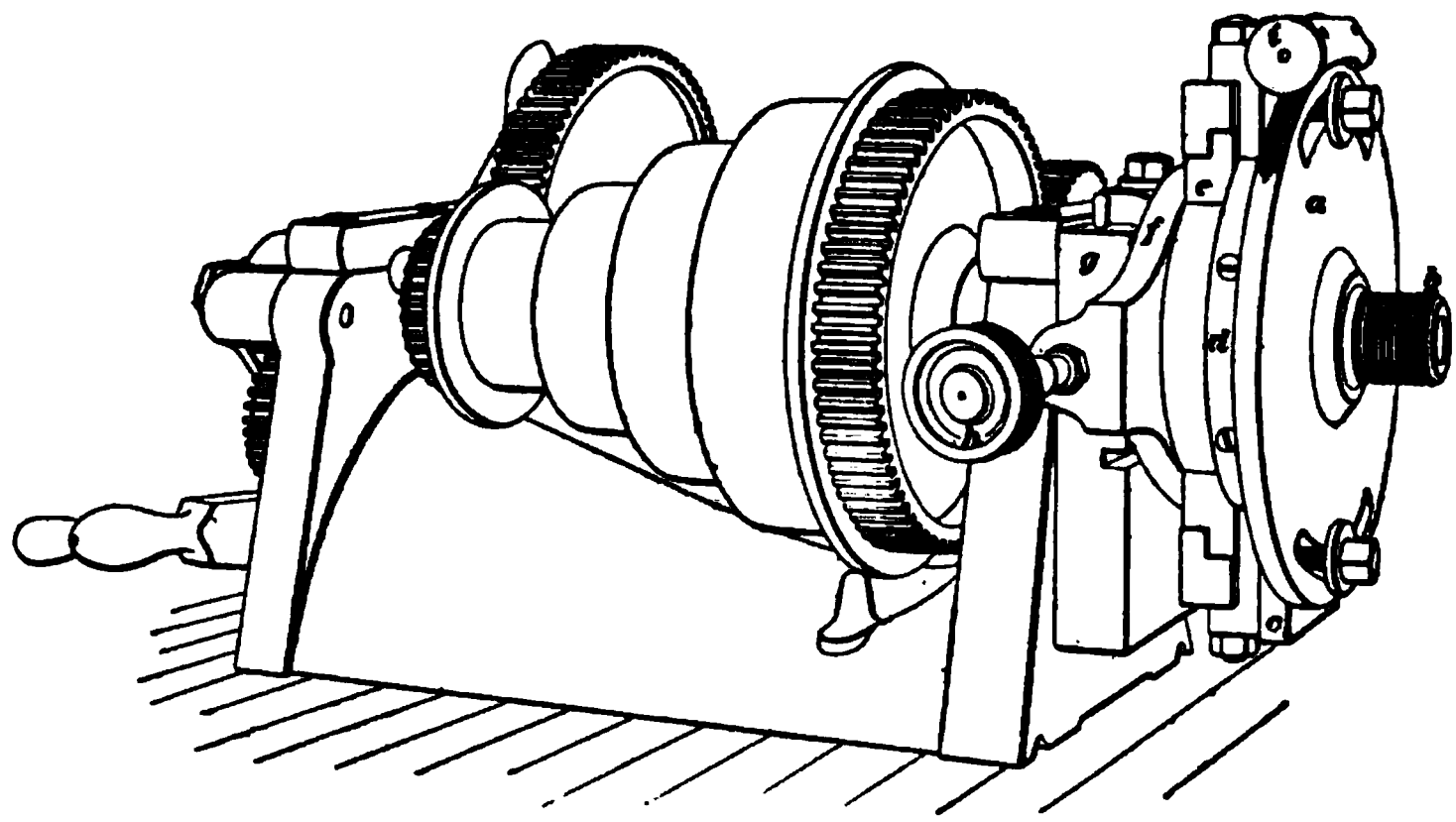

FIG. 40.

adjusting screws, one of which is shown at *h*, the ring attached to it will force the slide *e* to travel back and forth across the attachment as the work revolves, and this will cause the center of the plate *a*, and with it the work, to move back and forth, first away from and then toward the center of the lathe spindle proper. The result will be that an ellipse similar to that shown at *a e c f*, Fig. 39, will be turned. The amount that the slide *f* is moved determines the amount of eccentricity of the ellipse; that is, the amount shown by the line *b e*, Fig. 39. The block *g* is bolted fast to the front of the headstock. In the form of

chuck shown the plate *a* is provided with a screw *i*, and worm-teeth are cut for a short distance at the top of the plate. By means of these worm-teeth and the screw *i*, the plate *a* can be adjusted slightly in relation to the mechanism operating it. This device will be found very useful in resetting work in the chuck, as it serves to bring the work into line with the ellipse generated by the mechanism. This form of device is very handy for turning elliptical dies and punches, such as are used by jewelers, silversmiths, electrical-instrument manufacturers, and others.

LATHE WORK.

(PART 5.)

THE TURRET LATHE.

1. Characteristic Feature of the Turret Lathe.—Probably no one machine deserves greater credit for helping along the movement toward rapid production, and, consequently, the reduction of cost of manufactured articles, than the **turret lathe.** Its characteristic feature is found in the turret, which is made to bring, in quick succession, a number and variety of cutting tools to act on a bar or rod passed through the hollow spindle in the headstock and held in a chuck.

2. Action of the Turret.—The turret is mounted on a slide, parallel to the line of the live spindle, and occupies a position relatively the same as the tailstock on the ordinary lathe. It is made to slide upon the base either automatically or by a hand lever or wheel. After the tool, which is held in one of the radial holes in the turret, has made a certain cut upon the work, the turret is moved back, and, by an automatic arrangement, it is unclamped and made to rotate a part of a turn upon a vertical axis. This partial rotation brings the second tool in the turret in line with the work. Each full backward movement of the turret causes it to revolve a part of a turn, sufficient to bring the second tool in perfect line for the second cut.

For notice of copyright, see page immediately following the title page.

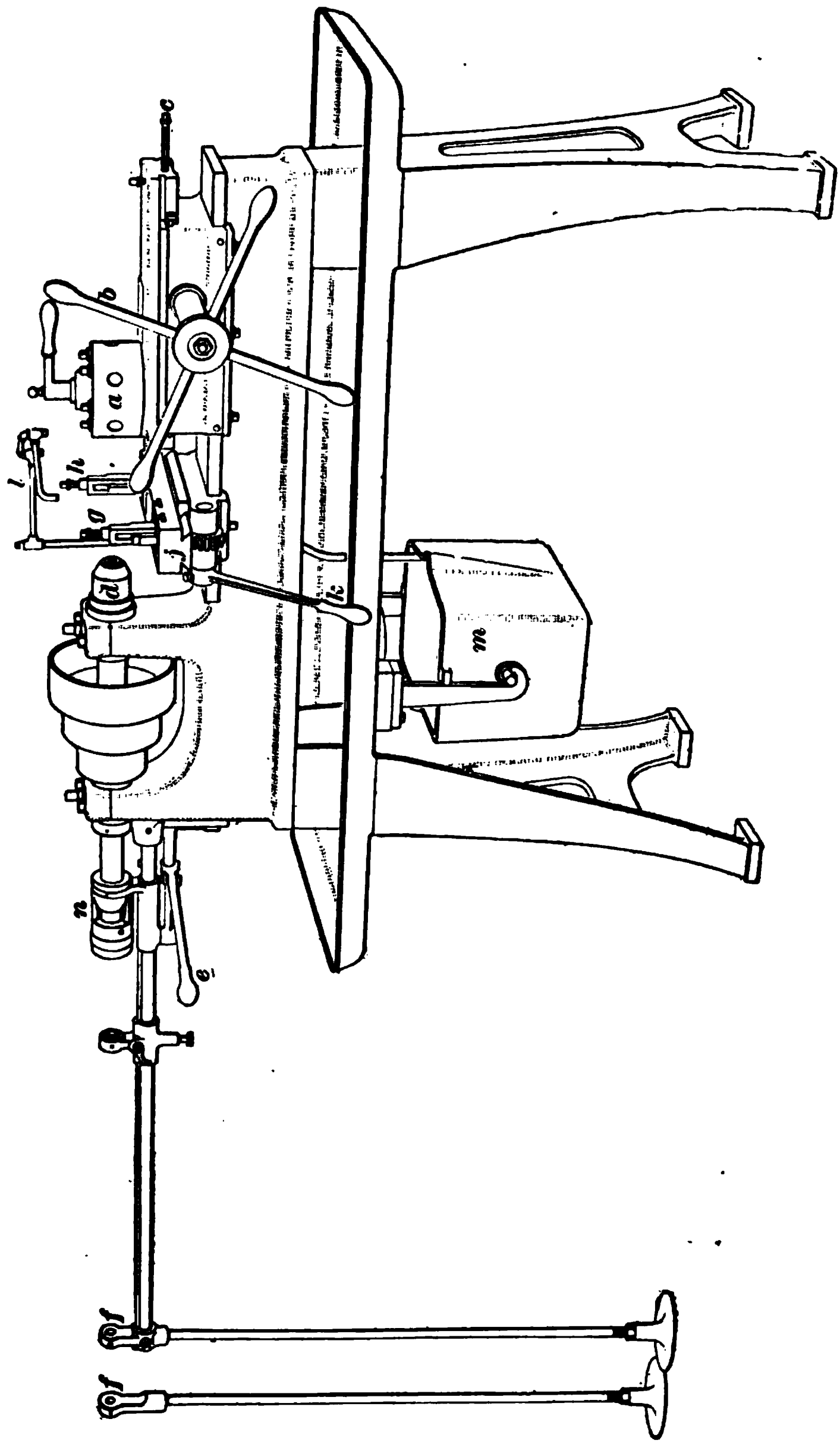

FIG 1.

3. Various Types of Turret Lathes.—This style of turret has been applied to a variety of lathes for various kinds of work, so that we have, under the head of turret lathes, the *turret screw machine*, *plain turret lathe*, *brass-worker's lathe*, and *monitor lathe*. Besides these there are some other special forms of turret lathes that are adapted to certain classes of work. In the screw-machine class are the hand and automatic machines.

HAND SCREW MACHINE.

4. Characteristics of the Screw Machine.—The **hand screw machine** more nearly embodies all the characteristics of turret lathes than any other type. Fig. 1 represents a typical turret screw machine. Its characteristic features are, the turret moving on a slide that takes the place of tailstock, a special form of chuck for gripping rods, and the rod-feed mechanism. The arrangements for supplying oil to the cutting tools, and for feeding the work into position are important features of the screw machine.

5. Names of Parts of Screw Machine.—In this lathe, Fig. 1, the parts are named as indicated by the following letters: *a*, the turret; *b*, the pilot wheel for moving the turret; *c*, the stop screw for adjusting the travel of the turret slide; *d*, a special chuck for holding the rod, or stock; *e*, the lever for opening and closing the chuck *d*, and for feeding the rod into the machine; *f*, supports for holding long rods; *g*, the front tool post; *h*, the back tool post; *j*, the cross-slide; *k*, the handle for operating the cross-slide; *l*, the distributing pipe for oil; *m*, the oil tank; *n*, the clutch for operating the chuck.

6. The Screw-Machine Chuck.—The success of the screw machine is due largely to the method employed in holding the work; this method gives great rigidity, and at the same time is so simple that the work can be quickly clamped or released.

Fig. 2 shows a section through the chuck screwed to the spindle of a lathe as it is used for holding rods. The grip

FIG. 2.

of the rod is accomplished by pushing the split collet *a* through the tapered hole in the end of the cap *b*, the cap being screwed to the nose of the lathe spindle. Fig. 3 shows the collet *a* removed. The collets are made of various sizes, depending on the size of the rod to be held, and are hardened, as is also the cap in which they slide.

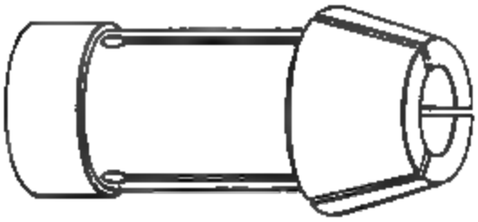

FIG. 3.

7. When gripping the work, the collet is pushed into the cap *b* by means of the hollow tube *d*, which passes

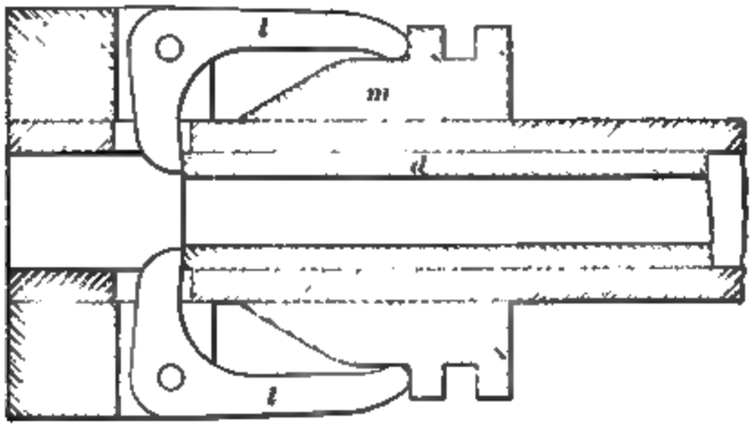

FIG. 4.

through the lathe spindle to the rear end. Fig. 4 shows a section through the rear end of the spindle and the gripping

mechanism. The end of the tube *d* comes against the two levers *l*, *l*. These levers are operated by the cone-shaped piece *m*, which slides on the spindle. When *m* is moved to the position indicated, the ends of the levers are forced apart, which moves their other ends against the end of the tube *d*. This operation pushes the tube through the spindle and against the collet, thus causing it to grip the work. When the cone *m* is moved back, the long ends of the levers spring together and relieve the pressure on the end of the tube *d*. Springs are arranged to open the chuck as soon as the cone *m* is removed from under the levers *l*, *l*. In this description, only the essential points have been mentioned, all unnecessary details, such as springs, being left out.

WORK OF THE TURRET SCREW MACHINE.

TURRET TOOLS AND THEIR USES.

8. Class of Work Done on Turret Machines.—The work of the turret screw machine is confined to a class of work that can be made on the ends of rods held in the chuck. Turret lathes are, therefore, without centers for supporting the work. The work of the screw machine can be understood by following the operations necessary to complete some particular piece. The tools used for the turret are quite different from those used in the ordinary engine lathe.

9. A Typical Piece of Work for Turret Screw Machines.—Suppose it is desired to make a large number of screws with a round nurled head, as shown in Fig. 5. Having decided upon the screw to be made, the machine must be *set up*.

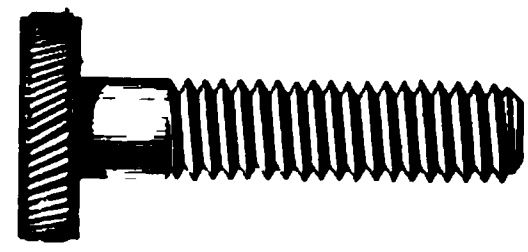

FIG. 5.

10. Setting Up the Turret Machine.—This means setting the various tools in a turret and in the cross-slide, adjusting the stops to determine the

length of cuts, and adjusting the cutter blades to turn the correct diameters. A rod is put through the spindle, and the chuck is so arranged that the work can be gripped rigidly, and also so that when it is released, the feed will move the rod through the spindle.

11. The Stop.—The first tool in the turret to be used will be the adjustable **stop gauge** shown in Fig. 6. This stop is so adjusted that when the turret and slide are at the full length of their travel next the headstock, and the work is fed up to the stop and gripped in the chuck, the correct length to make the screw will project from the chuck. Having clamped the work, the turret is moved back and revolved a part of a turn, which brings the first turning tool to place. This turning tool is known as a *roughing box tool.*

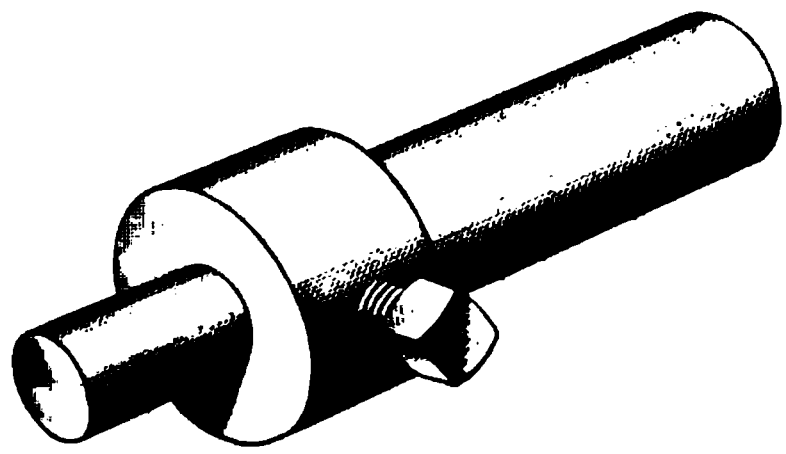

FIG. 6.

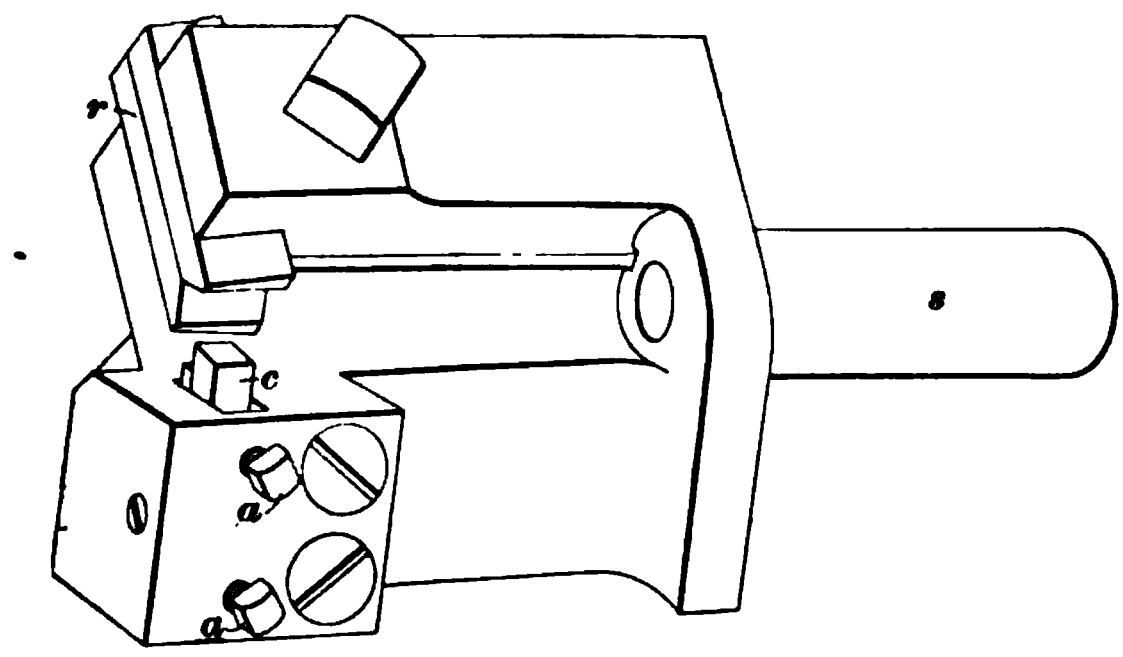

FIG. 7.

12. Roughing Box Tool.—The **roughing box tool** is shown in Fig. 7. The shank *s* is held in the turret, and the tool, or blade, *c* is clamped in place by the screws *a*, *a*. The tool is adjusted to turn the correct diameter by a series of careful trials. To support the work while the cut is being taken, the back rest *r*, opposite the tool *c*, must

be adjusted so that it just supports the end of the work. Fig. 8 shows an end view of the box tool with a section of work *w* in place. This shows how the tool, or blade, *c* comes against the work, and how the back rest supports it. Turret lathe tools do not need so much keenness as those on ordinary lathes. With this tool, a cut is taken over the stem of the screw up to the shoulder under the head. If the bar is iron or steel, a supply of lard oil is kept running on the work, to keep it and the tool blade from heating. When this roughing tool has cut a sufficient length, the turret slide comes against a stop. This stop is so adjusted that each tool will stop when the desired length has been turned. The turret is given another partial turn, which brings the second cutting tool in line for the cut. This tool is known as the *finishing box tool.*

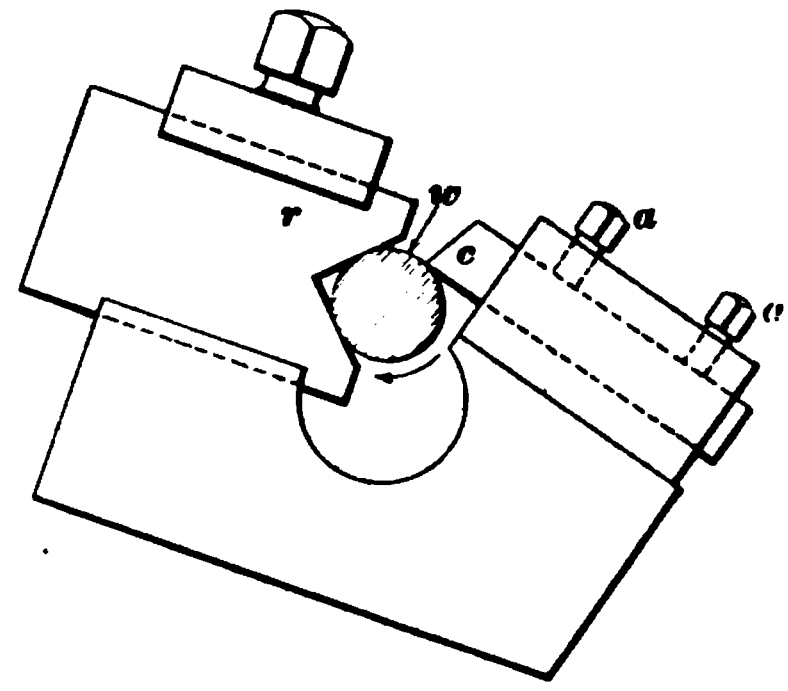

FIG. 8.

13. Finishing Box Tool.—The **finishing box tool** acts on the same principle as the roughing box tool, except that the blades are made and adjusted to cut similar to a broad-nosed lathe tool. The blade for the rough cut is ground on the same principle as the roughing tools for lathe work. Fig. 9 shows a finishing box tool. This will be seen to carry a number of cutters, each of which may be adjusted to cut a given depth by the setscrews *a* at the end of the blades. These blades are used when it is desired to finish parts to different diameters at the same time. Each blade is so adjusted along the length of the box tool that it will turn the desired length of work to that particular diameter. For the screw being made, only the first blade in the tool will be used. This will be adjusted to finish the stem of the screw to the correct diameter. Before cutting

the thread, the end of the stem should be beveled or chamfered. This is done with a *pointing tool.*

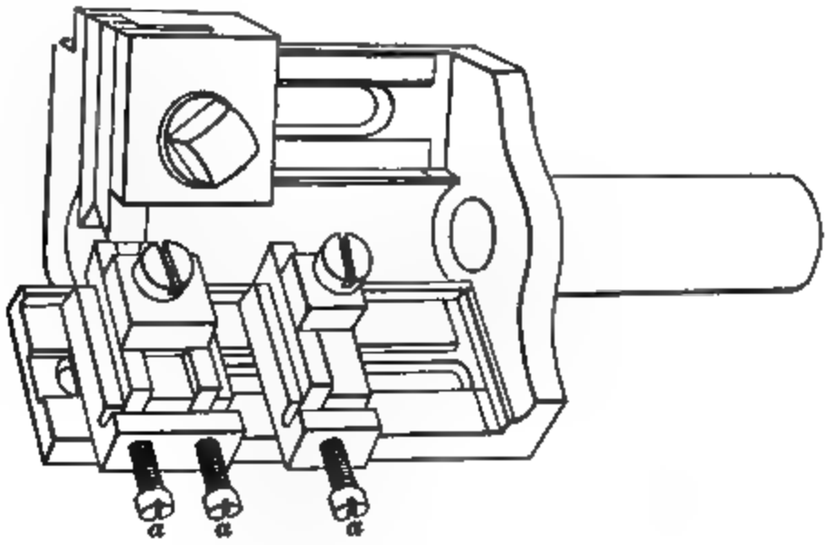

FIG. 9.

14. Pointing Tool.—The **pointing tool** is similar to the roughing box tool shown in Fig. 7. The blade, however, instead of being straight on the edge, is beveled to an angle, the same as the desired bevel on the end of the screw. The back rest is adjusted on a pointing tool the same as on other box tools. When brought to the end of the work, this tool will cut the desired bevel.

15. Dies and Die Holders.—The screw is now ready to be threaded. On all the screw machines the threads are cut with **dies.** In order that the threads will be cut an exact length on the stem of each screw, a special *die holder* must be used.

A **die holder** is shown in Fig. 10. The die holder *a* has a circular opening into which the dies are fastened by the screws *c*. The stem *d* passes through a sleeve, this sleeve having a flange on one end. The sleeve is held in one of the holes in the turret. When in the position shown in the illustration, the

FIG 10.

holder is free to revolve in the sleeve. When it is used and the die pressed against the work, the holder slips back in the sleeve until the pins *b* and *c* slip by the side of each other. Pin *c* will then keep the die holder from revolving. As soon as the holder ceases to revolve, the die will begin to cut, and, after cutting a few threads, it will continue to screw and feed itself along the work. If provision were not made to stop it as the lathe continued to revolve, the die would at once screw up to the shoulder on the work and destroy the thread. With the holder shown, the die will feed upon the work, the turret being made to follow it, until the turret slide reaches its stop. The work, however, continuing to revolve, will feed the die still farther, and bring the holder with it until the pins *b* and *c* disengage, whereupon the holder again revolves with the work, thus stopping the cut. In the meantime, the direction of the lathe is reversed and the turret moved back by hand until the pin *p* engages the notch cut in the end of the sleeve. This keeps the holder from turning backwards and so the die is backed off the screw. When considerable uniformity of size of threads is desired, a second sizing die is run over the thread. These operations complete the turret operations on the screw.

CROSS-SLIDE TOOLS.

16. Nurling Tool.—When the head of a screw is to be **nurled,** as in the present case, it is done by pressing hardened-steel rollers against the face of the work while it revolves. These hardened-steel rollers have teeth, or special forms, engraved around their outside, so that when pressed against the work they will form the soft metal into the desired shape. In the case in hand, the nurling tool shown in Fig. 11 is employed and will be described more fully later. Nurling tools are held in one of the tool posts on the cross-slide.

17. Parting Tool.—The **parting tools** used in the turret lathe are very similar to those used in a regular lathe, and are held in one of the tool posts on the cross-slide. Combination parting and forming tools are sometimes employed. They are intended to round the head and cut off the stock at the same time.

18. Combination of Parting and Nurling Tool.—Fig. 11 shows a special nurling tool held in the tool post,

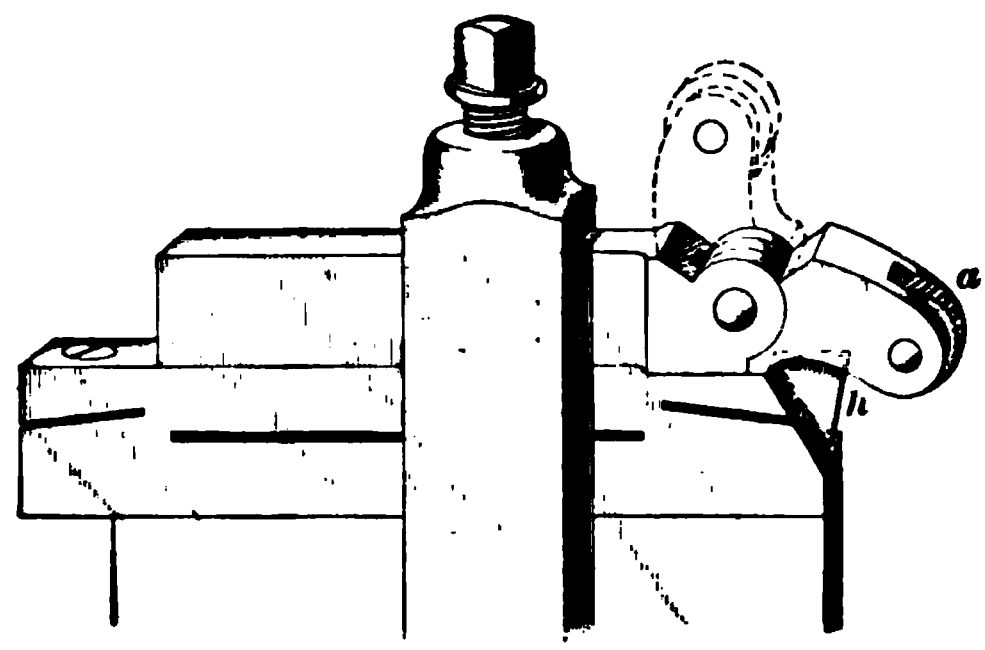

FIG. 11.

together with a parting tool. The parting tool is clamped under the nurling tool, with its blade shown at *h*. The nurling tool is jointed, so that when the parting tool is used, the nurl *a* may be lifted up to the position shown by the dotted lines. While the screw is being made, the nurl should be turned back and the parting tool used to cut a shallow notch in the work, which will define the thickness of the head. If the head must be made true, a light cut should be taken with a back tool held in the back tool post. This back tool should be shaped the same as a broad-nosed lathe tool and set in the tool post upside down, so that it will cut on the back of the work when the lathe is running forwards. The stop on the cross-slide should be so adjusted that the tool will just cut the head to the desired diameter. The nurling tool may then be brought against the work, and, by pressure of the hand lever, forced against the work until the

teeth in the nurl roll press corresponding grooves in the head of the screw. When the work has been properly nurled, the parting tool is again brought to place and the screw cut from the bar.

When the parting tool is sharp and working well, it should leave the head of the screw bright and smooth, without any projection in the center. The parting tool, therefore, must be so set that its edge comes exactly in line with the axis of the work. If the parting tool is ground square across

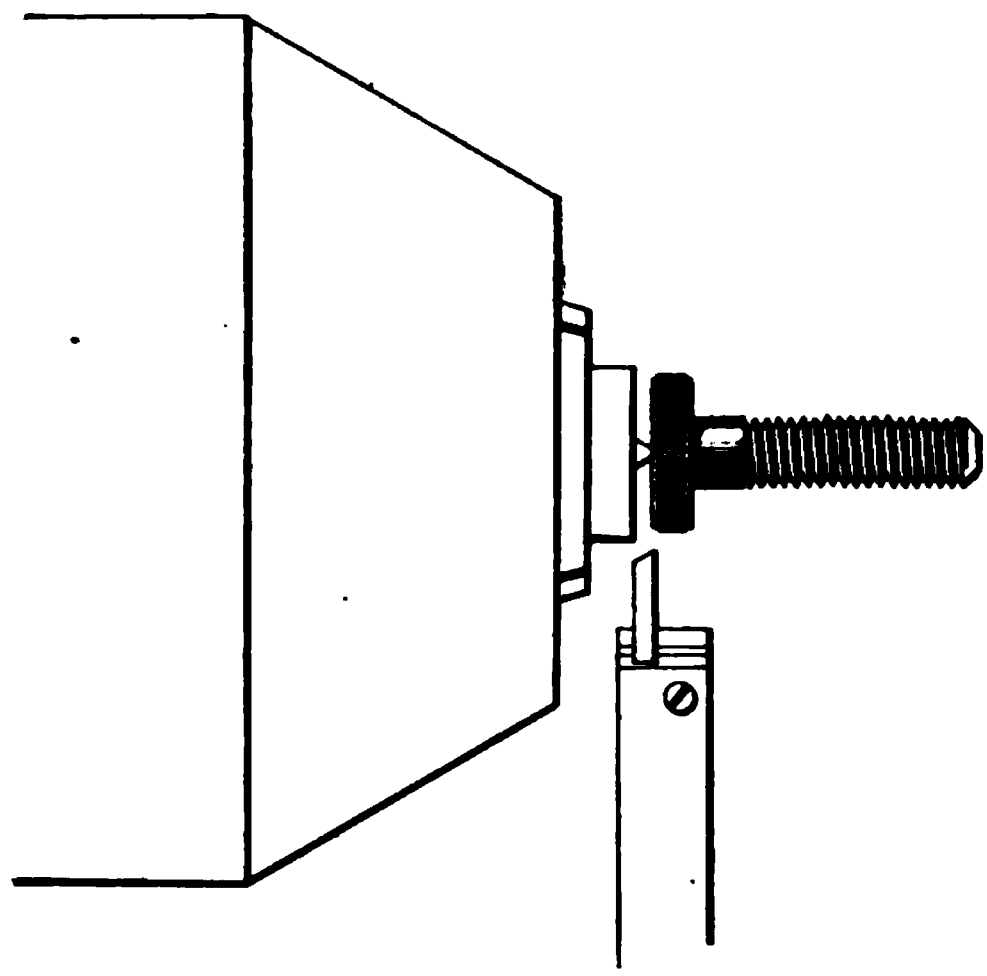

FIG. 12.

its cutting edge, the work will break off before the cut is quite finished. This may be avoided by grinding the cutting edge of the parting tool beveled, as shown in Fig. 12. Here it cuts a smaller diameter near the head, and, when the work breaks off, it will break at this small diameter.

19. The operation of making a screw just described is but one of a very great variety that may be performed on the screw machine. While certain tools were chosen to perform this operation, there are other forms of tools that could have been used with the same result.

OTHER FORMS OF TURRET TOOLS.

20. Solid Hollow Mills. — In place of the roughing box tool, a **hollow mill** could have been used. Fig. 13 shows a solid hollow mill, and Fig. 14 shows a holder used for it. These mills cut on the edges *a*, *a*, and are bored to the size that they are intended to turn. As soon as the mill

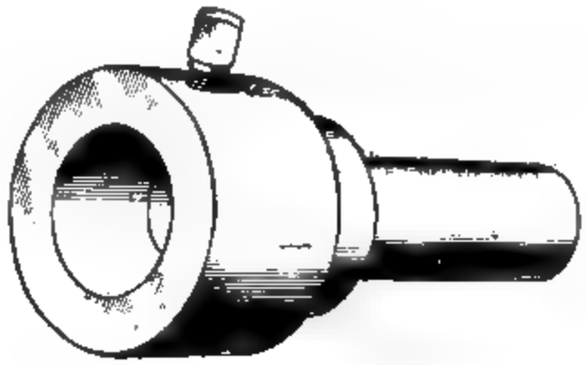

FIG. 13. FIG. 14.

begins to cut, the end of the work at once enters it and is thereby steadied or supported while the cut is being taken. Because of the four cutters on opposite sides of the work, it is balanced so that there is less tendency for it to spring than when there is but one cutter acting.

21. Adjustable Hollow Mills. — Fig. 15 shows an **adjustable hollow mill.** By loosening the screws at the front and turning the nurled head, the blades *a*, *a* can be

FIG. 15. FIG. 16.

moved toward or from the center, thus making the cut larger or smaller. The cutting action of this tool is the same as

that of the solid hollow mill. The cut is taken on the end face of the cutter blades, the inner faces acting as guides to support the work after it is turned. It is always advisable to run a finishing box tool over the cut made with a hollow mill, since it cannot be depended on to be perfectly true. Finishing tools are made in a variety of shapes. Fig. 16 shows a style of finishing hollow mill that has two inserted blades *a*, *a*, which do the cutting, while the other two blades *b*, *b* are simply back rests to steady the work.

22. Spring Dies.—Besides the solid dies mentioned, other forms are used. Fig. 17 shows a form of **hollow spring die** that is held in the holder shown in Fig. 10. When in use, this die would tend to spring, so that it is necessary to use a clamp, Fig. 18, that will pass around the die and hold it in shape. By means of this clamp, the die may be adjusted to make slight differences in cutting. When such a form of die is employed, considerable time is lost in reversing the machine and backing the die from the work.

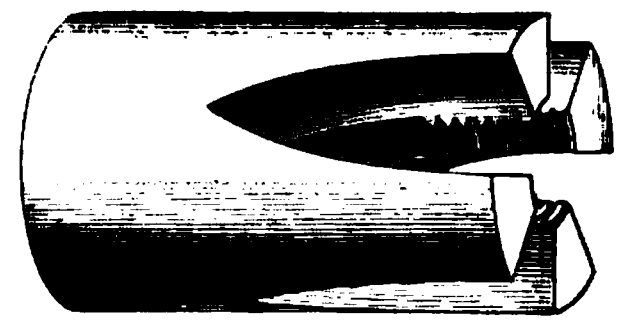

FIG. 17.

23. Automatic Dies.—To overcome the above difficulty, **automatic dies** are used, which act on a principle similar to that found in the automatic dies used on bolt cutters. The die passes over the work and cuts the thread, which, when completed, automatically opens the die and releases the work. Fig. 19 shows an excellent form of automatic die adapted particularly to turret screw machines. The die heads are made in a number of sizes, each head taking a variety of sizes of dies. In the figure, the dies *d*, *d* may be removed by taking out the screws *s*, *s* and different sizes put in their places. They may be set to cut any length of thread

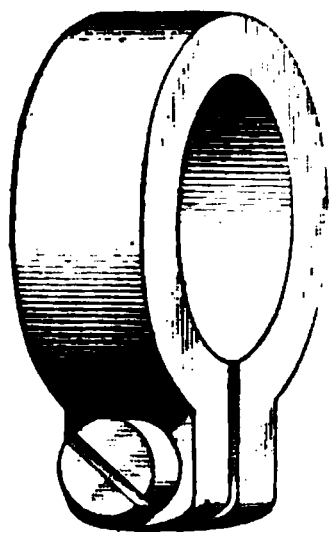

FIG. 18.

within limits. When the desired length is cut, the die automatically opens. To close the die, the handle *h* is given a partial turn. This die may be adjusted to cut threads slightly above or below standard size by loosening the nut *n* at the back of the die holder and moving the pointer to one side or the other of the zero mark. By means of this adjustment, it is possible to cut threads as much as $\frac{1}{64}$ inch over or under standard size.

FIG. 19.

DRILLING AND TAPPING.

24. Holding the Tools. — When operations require that drilling or tapping be done, the drills or taps are held in the turret in the same manner as the other tools. The drills may be held in a chuck provided for that purpose. When the taps are used, a special tap holder that works on the same principle as the special die holder, Fig. 10, is employed. This is to keep the taps from running into the work too far and breaking.

25. Many other shapes and kinds of tools may be used in the turret. Those that have been mentioned are the standard tools, and embody a general principle, which is, that the work must be supported while the blades are cutting. By following this principle, a great variety of shapes of tools may be designed and adapted to particular classes of work with advantage.

OTHER FORMS OF CROSS-SLIDE TOOLS.

26. Forged Forming Tools.—The tools used in the cross-slide perform various operations, the more important of which are the forming of irregular surfaces with

forming tools, and the cutting of the finished piece from the bar with the cutting-off tool. The forming tools may be forged from bar steel, and filed or machined to the desired form. When so made, they are similar to the forged forming tools used in the engine lathe. The main objection to the forged forming tool is that only a limited amount of grinding can be done before the tool will change its shape.

27. Circular Forming Tools.—This class of forming tools has been brought out both to overcome the objections to the forged forming tool and on account of the ease with which the cutters can be manufactured. Fig. 20 illustrates a typical tool of this class. Here a circular cutter *c* has been carefully turned and formed so that when a section is taken out at its cutting edge, it will conform to the desired shape of the work. A notch is cut on one side of the cutter so that the lower face *C D*, Fig. 21, is in a plane that would pass slightly below the center of the cutter *A B*. This amount *k* varies with the diameter of the cutter. On a 2-inch cutter, from $\frac{1}{8}$ to $\frac{1}{4}$ inch is sufficient. The holder *h*, Fig. 20, is made of such height that it holds the center of the cutter above the center of the work, thus bringing the face of the cutter *C D*, Fig. 21.

Fig. 20.

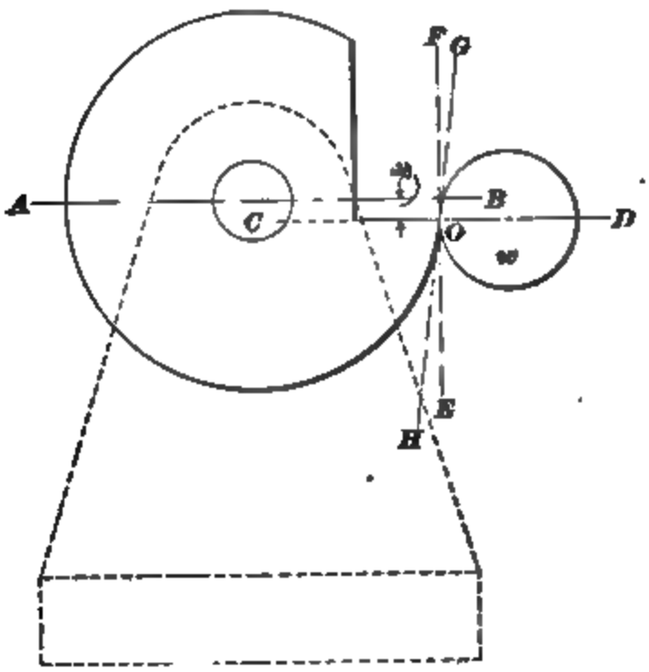

Fig. 21.

in line with the center of the work *w*. The object in cutting the notch in the cutter below its center and then raising it above the center of the work is to give the tool slight clearance. If the two circular pieces, the tool and the work, be set at the same height, Fig. 22, they will touch at the point *O*, which is in a line joining the centers. If we draw a tangent to the work through the point *O* and another line tangent to the tool through the same point, we will find that the two tangents coincide in the line *C D*. When the tool is thus set, it does not have any clearance, and can cut only so long as it remains absolutely sharp.

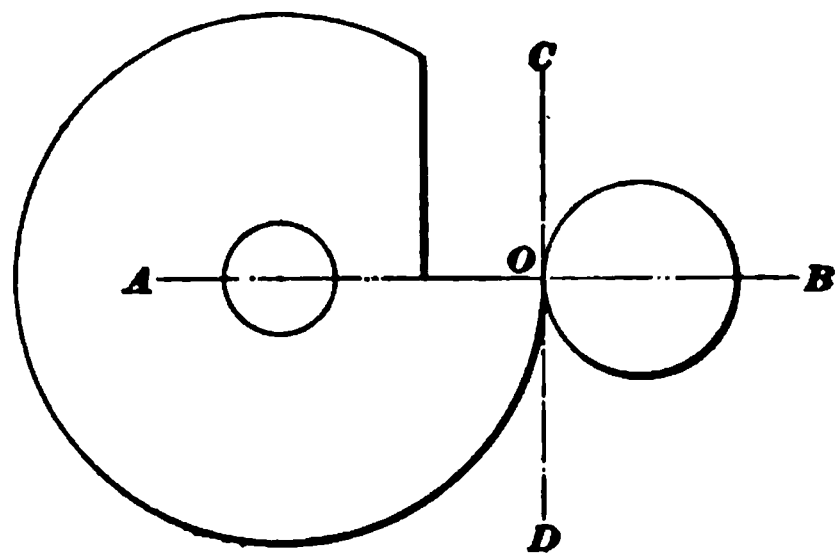

FIG. 22.

28. Referring to Fig. 21, if we draw a line *E F* tangent to the work through the point of the tool, and the line *G H* tangent to the circular cutter at the point, we will find that the lines do not coincide as in Fig. 22, but form an angle. The angle *H O E* is the angle of clearance when the tool is thus set.

Cutting the face of the notch on the tool slightly below the center will slightly change the outline of the cutting edge, since a section of the cutter on the line *A B* is different from the section on the line *C D*, Fig. 21. If the cutter is $2\frac{1}{2}$ inches in diameter, the difference in section caused by cutting from $\frac{1}{8}$ to $\frac{1}{4}$ inch below the center line will not be sufficient to cause trouble in ordinary work. If an exact outline is required, the cutter must be formed to give the desired outline on its cutting edge and not on the diametrical section. This form of tool is sharpened by grinding the top cutting face, after which the cutter is revolved sufficiently to bring the cutting edge to the desired height.

29. Straight-Faced Forming Tools.—Another style of forming tool is shown in Figs. 23 and 24. The heavy cast block, or holder, shown in Fig. 23, is bolted to the cross-slide. Into the front side of this tool block is cut a dovetailed slot *c*, into which is fitted the dovetailed part *d* of the forming cutter, Fig. 24. The cutter is clamped to the block by tightening the bolt *e*, which has a special clamp head *f*.

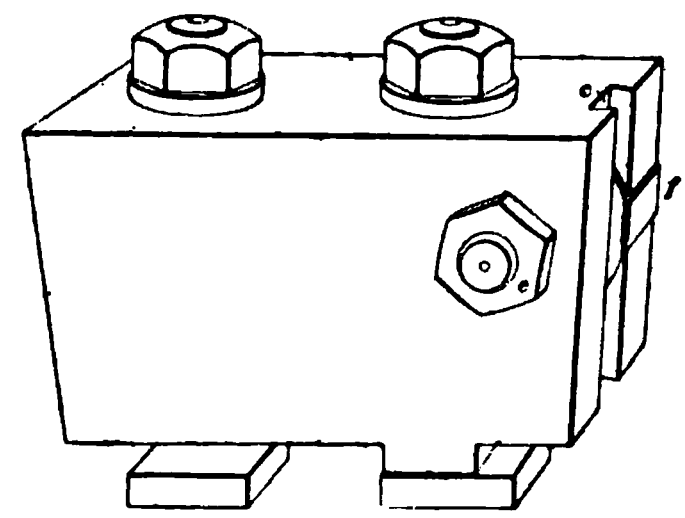

FIG. 23.

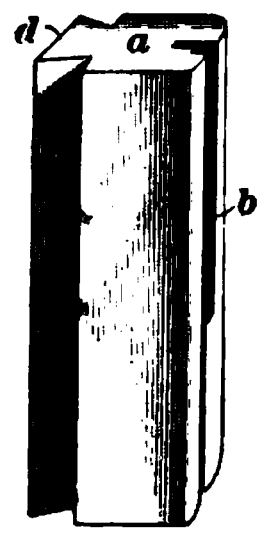

FIG. 24.

These forming cutters are shaped along the front edge the same as ordinary forming tools, so that the section across the top cutting face gives the desired outline. They are set in the holder so that the front face *b* has a slight angle of clearance. The top face *a* is ground flat and set at the same height as the center of the work. This is a very rigid form of tool.

30. The forming tools just described are fed to the work in such a way that the cutting edge follows in a line that would pass through the axis of the work; thus, in Fig. 21, as the tool advances to take a deeper cut, it moves along the line *C D*.

VERTICAL-SLIDE FORMING TOOLS.

31. Vertical Slide for Holding Tools. — Another method of operating forming tools is by means of a vertical slide rest shown in Fig. 25. Here a vertical slide is clamped to the back of the ordinary cross-slide. When this slide is used with the forming tool, the cutting edge does not move in a line that would pass through the axis of the work, but in a line tangent to the finished work.

Fig. 26 shows a side elevation with the forming cutter *c* in place. The cutting edge follows the line *A B* as the tool moves down in the slide. This particular movement is

very desirable at times. The cutter *c* is clamped to the block *b* by a bolt *d*. The slide *s* carrying the block *b* travels

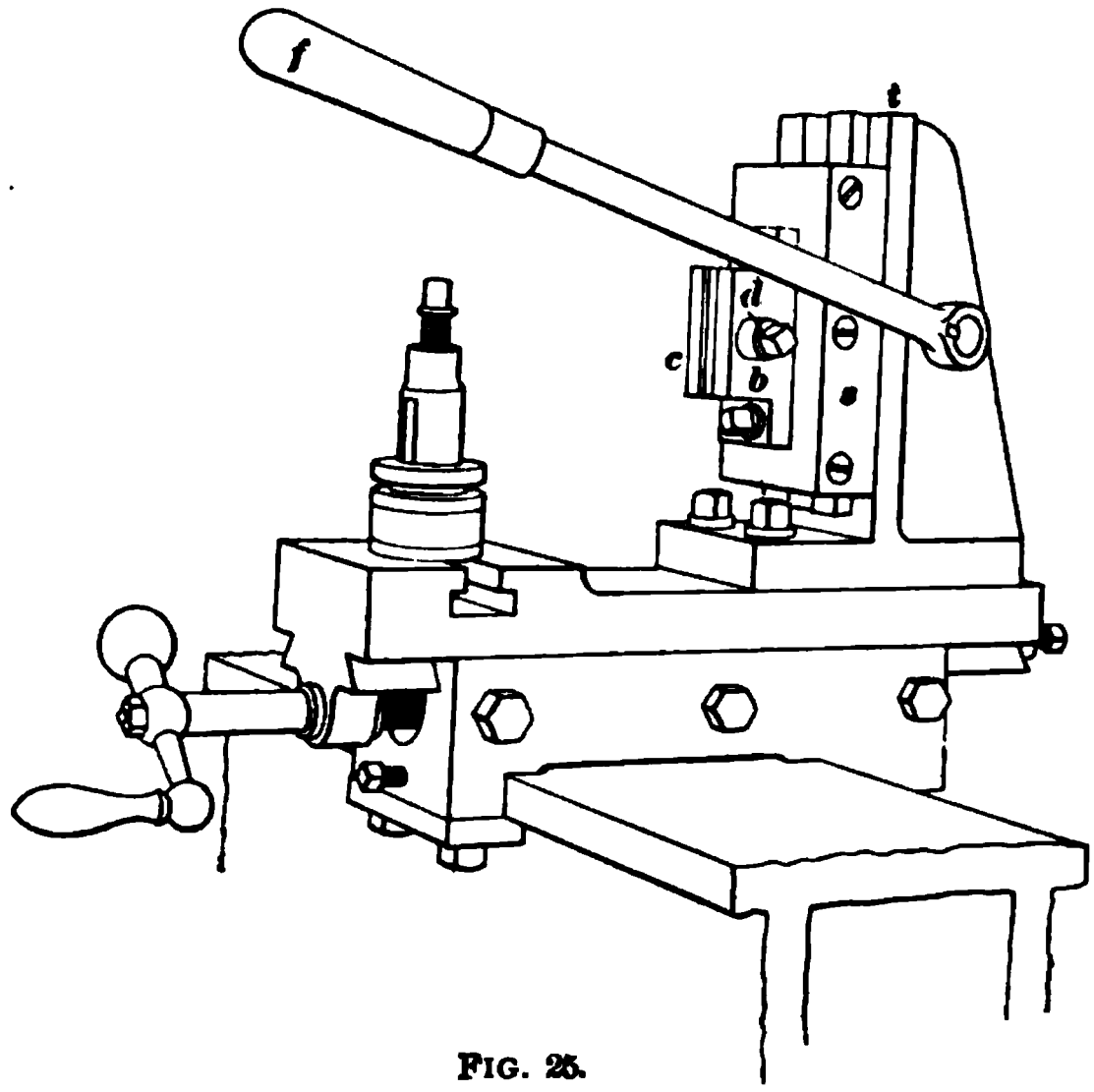

FIG. 25.

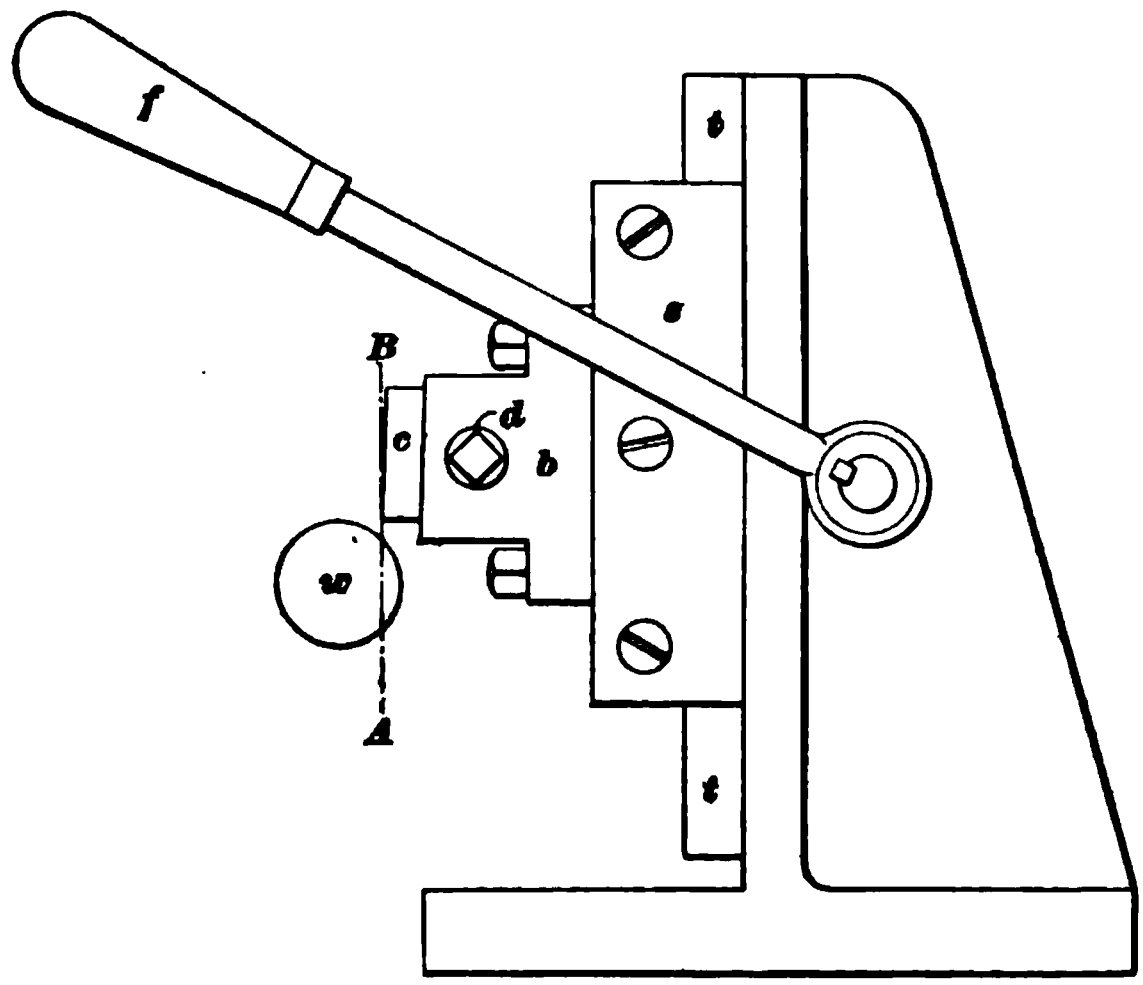

FIG. 26.

on the guide *t*, being controlled by the lever *f*. The work is shown at *w*.

32. Form of Tool to Prevent Chattering.—When tools are used as in Fig. 21, the entire cutting edge of the tool is acting at once. If the cut is complicated, or the edge broad, the work will spring and chatter because of the broad cutting edge. When the vertical slide is used, it is possible to grind the cutting face of the forming tool with considerable slope to one side, which corresponds to the top side rake in the diamond-pointed lathe tool. A tool thus ground is shown in plan and elevation in Fig. 27, and also the shape of the work *w* that this particular form of tool would produce. It will be seen that as the tool is fed downwards past the work, the edge or point *a* will be the first to cut. When the tool is still farther fed along, the point *a* soon cuts to its depth and passes by the work, while other points along the cutting edge are approaching the work. By the time that the point *b* of the cutting edge has reached the work, the point *a* and all the other points along the edge have passed by, having done their respective parts in the cutting. This method, therefore, permits the use of broad-edged forming tools, since the action is a shaving one, and whatever the total length of the edge of the forming blade may be, only a small part of it cuts at a time. This same principle is used on tools that work on a horizontal slide and cut on the under side of the work.

FIG. 27.

SPECIAL FORMING HEADS.

33. Arrangement of Forming Head.—When very much forming is to be done, and greater production is desired than can be obtained by the use of the forming tools just

described, a **special forming head** is used that holds two forming cutters, one at the front and the other at the back of the work. Such a forming attachment is shown in Fig. 28. In this, the front and back forming blades *a* and *b* are held in place in tool blocks *c* and *d*. These blocks slide in the base *e*. They are operated by the same screw, which has a right-hand thread at one end and a left-hand thread at the other, each being of the same pitch. By turning the hand wheel *h*, the blocks *c* and *d* advance or recede from the work at a uniform speed. When in use, the blocks and blades are so adjusted that each forming blade is cutting the same depth. The hand wheel *h* is then turned until the blades have entered the work the desired depth.

FIG 28.

34. Form of Blades Employed. — In the forming attachments using two forming blades, the edges of the

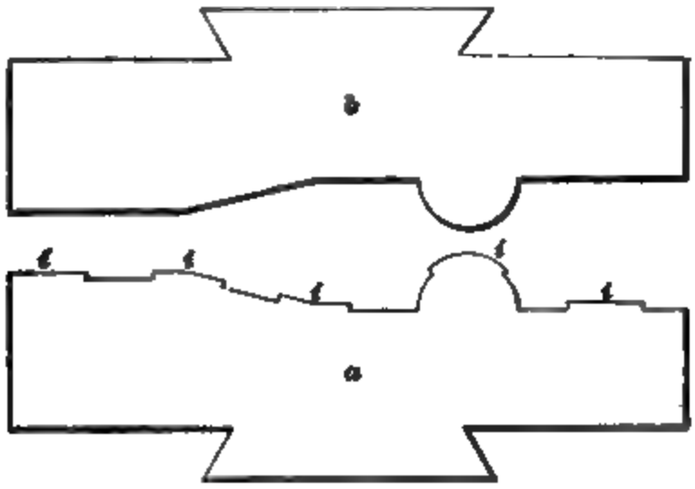

FIG 29.

blades are not exactly alike. In this case, the back tool *b* may be of the desired outline, while the front tool *a* is

similar, but may have notches cut along its face. This is shown in Fig. 29, where the cutting edges of the forming tools are compared. The back tool *b* has a regular outline, while the edge of the front tool *a* is slightly broken. The result of this is that the shaving is broken, the high parts of the front tool doing the cutting at the points *i*, while the back blade takes all the remaining parts. This relieves the strain on the work and the cutters very much. When the work is nearly completed, the front blade is slightly backed away from the work by moving the lever *f*. This allows the tool at the back to finish the work smooth. When two cuts are thus taken, the work is quite well balanced, but to still further steady it, a steady rest with V jaws, operated by the hand crank *g*, is used. These types of forming attachments are extensively used in bicycle making on such pieces of work as hubs, cones, spindles, pedal pins, and similar pieces that are cut from the solid bar.

SPECIAL PARTING TOOLS.

35. Inverted Parting Tool.—Instead of the regular parting tool held in the tool post for cutting off the finished work, a special holder for blades may be used, as shown in Fig. 30. This tool is intended to be used at the back of the machine; consequently, the blade is inverted, with the cutting edge at *c*. By holding the cutting blade sloping, as here shown, the tool will have a top rake, which will add to its efficiency.

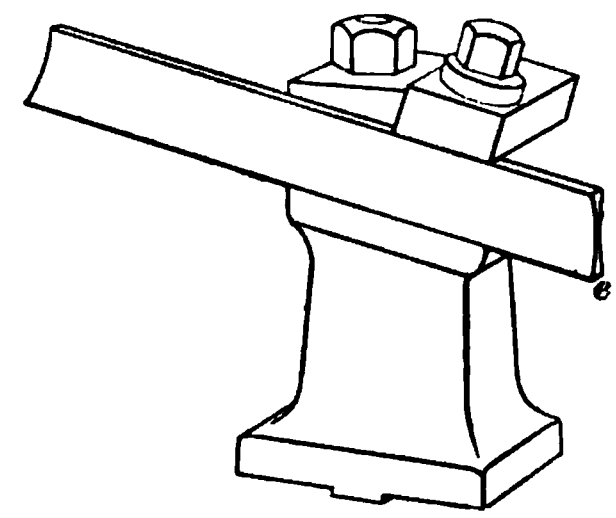

FIG. 30.

36. Combined Parting and Forming Tool. — When the head of the piece to be cut off is curved, as in the case of round-headed screws, **circular forming tools** may be used. Fig. 31 shows a section through a circular

forming tool that could be used for a cutting-off tool, and at the same time be a forming tool for the head of the work.

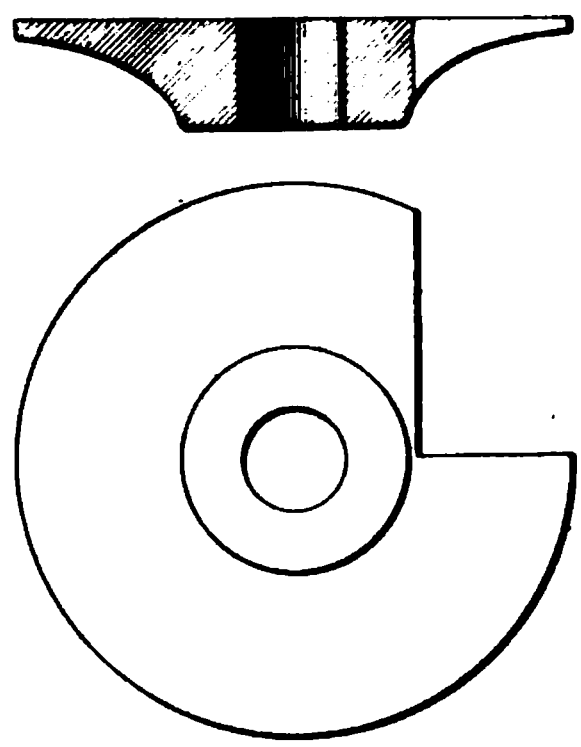

FIG. 31.

37. Steady Rest for Turret Work.—In some cases, a **steady rest** can be used in the turret for certain purposes. Suppose the piece shown in Fig. 32 were being made. The part *a* would first be turned to size. A hardened-steel sleeve *s*, shown in section, which has been bored to fit over the part *a*, is then slipped over it. This supports the work while the part *b* is being formed, and while the work is being cut off.

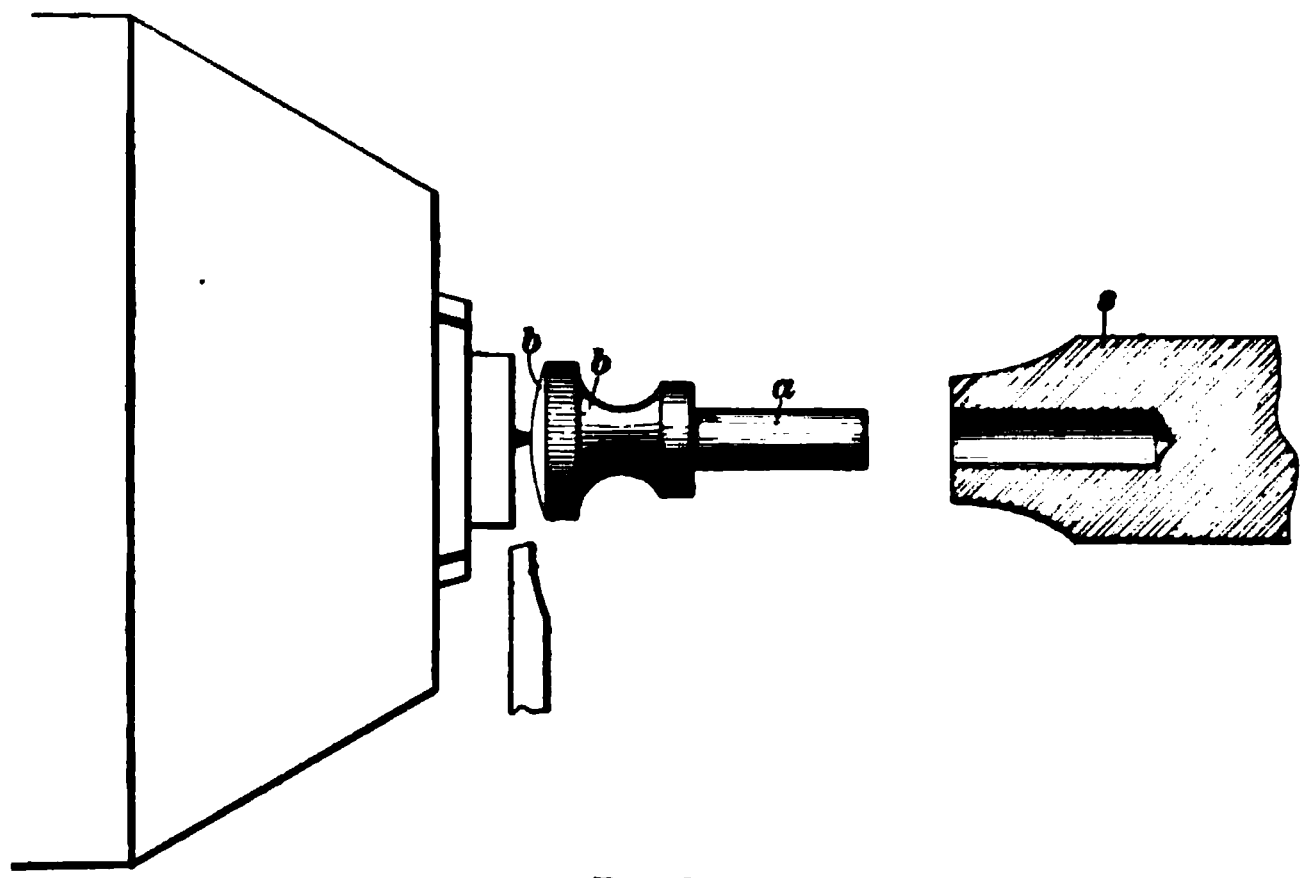

FIG. 32.

This method of supporting the end of the work may be applied to many styles and classes of work.

UNIVERSAL MONITOR LATHES.

38. Description of the Monitor Lathe.—Another class of turret lathe that is extensively used for brass work and for work that is not made on the ends of rods, is the

monitor lathe, shown in Fig. 33. This style of lathe lacks the ordinary rod feed and chuck found on the regular screw machines. The work performed by this class of lathe is usually held in a chuck of some special form designed for

FIG 33.

the particular work at hand. The turret is mounted on a double slide, so that it can move along the line of centers, or at right angles across the lathe. This gives a combination of movements for the turret that are not possible on the screw machines.

39. Chasing Threads.—Besides the method of cutting screws by holding dies in the turret, this lathe has a special attachment for **chasing threads.** At the back of the lathe, nicely fitted to bearings at either end of the lathe bed, is the large circular *chaser bar a*, Fig. 33, which is free to move in the direction of its length. To the headstock end of the chaser bar an arm *b* is rigidly attached. On the end of the arm *b* a piece *c* is attached, on which a few threads are cut similar to those in a half nut. These threads engage with the screw *d*, seen on the stud of the lathe. When thus engaged, as the lathe revolves, the threads on the piece *c* follow the threads in the screw *d*.

This tends to feed or draw the chaser bar *a* through its bearings. To stop the feed, it is only necessary to lift the arm and the threads *c* away from the screw *d*. The bar can then be moved back to its starting point. Near the center of the bar a slide rest is attached, as shown at *e*. Extending over the bed to the front is a lever *f* to be operated by hand.

40. Suppose a center were put in one of the turret holes and the work held between centers in order to have a thread cut or chased. The tool would be adjusted in the tool post of the slide *e* so that it just touched the work when the piece *c* was against the screw *d*. As the lathe revolved, the tool would be drawn along and would chase a thread on the work of the same pitch as the screw *d*. When the desired length of thread has been chased, the lever *f* at the front of the bed is lifted, thus raising the tool from the work and, at the same time, the piece *c* from the screw *d*. The bar may then be moved back to the starting point, the tool moved forwards a little on the slide *e*, and the lever *f* again dropped until the piece *c* engages with the screw *d*, when the second cut may be taken. This operation is repeated until the desired depth of thread has been chased. It will be seen that by this method only short threads can be cut and that the screw *d* must be changed for every desired pitch. These screws *d* are, in reality, shells that fit over the spindle or stud. They are made with various pitches of threads and are variously called *leaders*, *hobs*, or *master threads*. This method is extensively used in cutting the threads on brass pipe, valves, or similar work.

SPECIAL FORMS OF TURRET LATHES.

41. The Turret Applied to Engine Lathes.—For certain chucking operations, the turret may be applied very conveniently to an ordinary engine lathe. Suppose a great many pulleys are to be bored and the hubs faced. Instead

of changing the tools in the tool post each time it is used for boring and reaming, if a turret is used, each tool can be kept in its place, thus saving much time. Fig. 34 shows a set of tools that may be used in the turret on an engine lathe for such work as boring and facing pulleys. Tool (*a*) can be used to ream the ends of the cored hole, and to make a starting place for the chucking reamer (*b*). A fluted shell reamer for finishing the holes to size is shown at (*c*),

FIG. 34.

while (*d*) and (*e*) are facing tools, the ends *h* having been turned to just fit the bore of the pulley and to steady the tool while the blades *k* are cutting. In (*d*), which is the roughing facing tool, edges are nicked to break the shaving, while, in the finishing tool (*e*), the cutter blade has a straight edge.

42. Illustration of Turret Lathe Applied to Heavy Work.—Fig. 35 shows another application of the turret to the lathe In this case an octagonal turret takes the place of the saddle on the lathe. Power feed moves the turret automatically along or across the bed, it having the same motion as an ordinary tool post in the lathe. In this figure an engine cylinder head, 22 inches in diameter, is being finished. Special chuck jaws hold the work to the face plate, while the blocks *a*, *a*, which have been faced off after being bolted to the face plate, aid in setting the work

true with the face plate. The turret has flat faces on its sides, so that special tool holders can be clamped to it. By

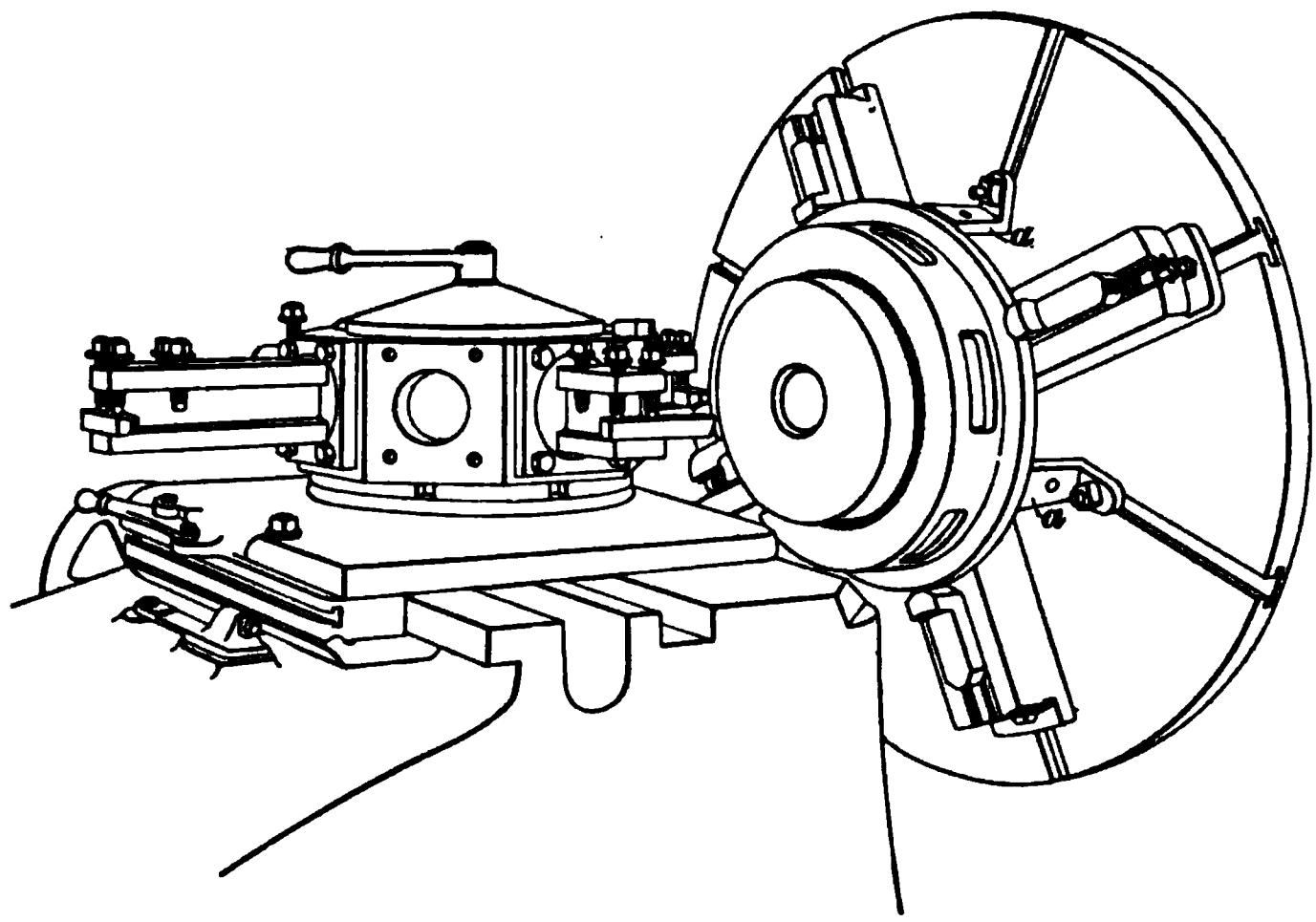

FIG. 35.

the use of these holders, facing, turning, and boring tools may be held in the turret and brought in quick succession to perform their respective duties.

43. Special Turret Lathe for Heavy Work.— Fig. 36 illustrates a chucking lathe designed for the heaviest class of work on castings or forgings. The machine is massive in design and its power is sufficient to take the heaviest cuts. Like all turret lathes, special forms of tools and cutters are required before work of any kind can be done; but, once the machine is equipped with a set of tools designed for a special purpose, its productive capacity is very great. Where the number of like pieces to be finished is relatively small, it will rarely pay to install one of these powerful machines and to equip it with its expensive special tools; but if a considerable number of pieces of any special design are to be made, such a machine will be a valuable acquisition to the shop equipment.

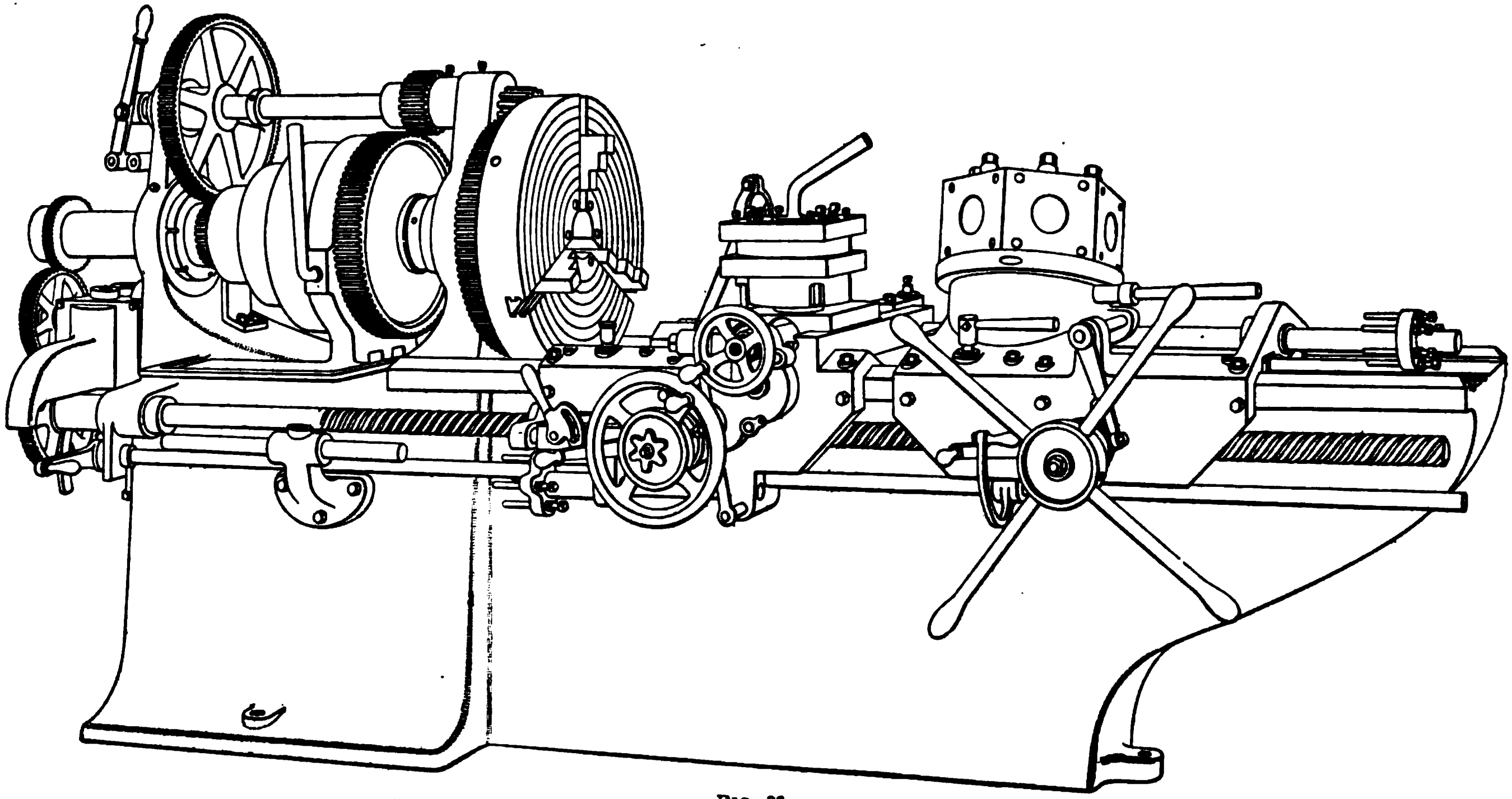

FIG. 36.

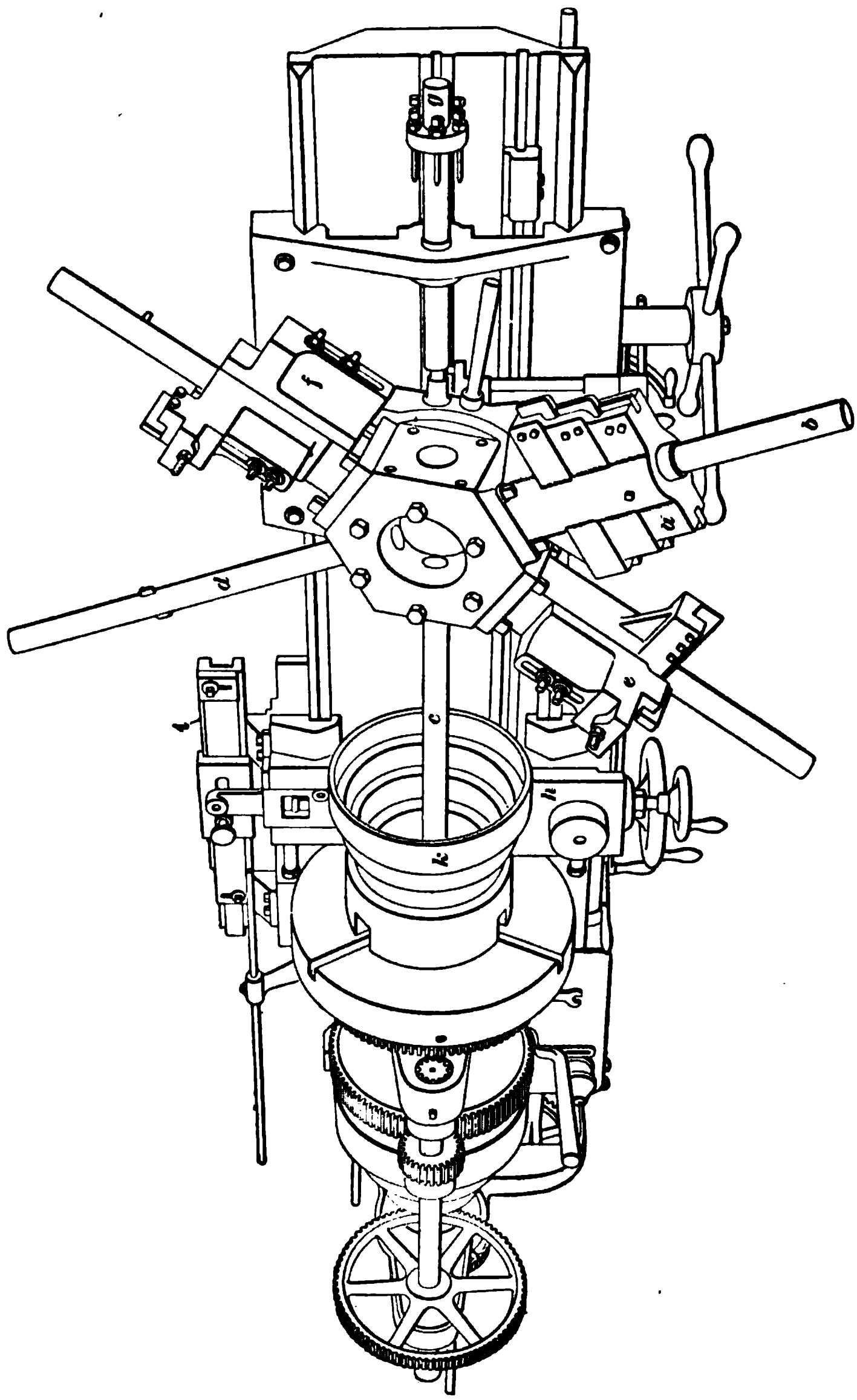

FIG. 37.

44. Boring Cone Pulleys in Turret Lathes.— Fig. 37 illustrates the lathe shown in Fig. 36 fitted up to bore a cone pulley *k*. The hub is roughed out by a cutter on the bar *c* and finished by the cutter on the bar *d*. The steps of the cones are bored and the faces finished by the special tools *a* on the bar *b*, while the outer edge of the pulley is faced and a finishing cut taken on the inside of the largest cone by the heads *e* and *f*. It will be noticed that all the tools are provided with extensions on the ends of the bars, which fit bushings in the spindle of the machine or the chuck and thus furnish a guide for the end of the bar. This adds greatly to the stiffness of the tool and to the effectiveness of the machine. At *g* a series of screws are arranged to act as stops for the various tools. Each one of these can be adjusted separately. In the illustration, the carriage *h* and the taper attachment *i* are not in use. These cone pulleys may be finished on the outside on the same machine by mounting them on suitable arbors and turning them with special tools placed on the carriage *h*. This example is given simply as an illustration of the class of work for which this style of machine is adapted.

45. Special Turret Lathe for Large Bar Work. Fig. 38 illustrates a turret lathe especially designed for work on large bars of steel or iron, either round, rectangular, or having any other cross-section. The parts of the machine are lettered; *a* is the automatic chuck for holding the bar; *b*, the lever for operating the chuck and controlling the forward feeding of the stock; *c*, the lever for throwing in the back-gear clutch; *d*, the roller-feed mechanism for feeding the bar forwards; *e*, the turret, which is of special construction, being flat on top and having the tools so attached to it that it is possible to operate on long bars by allowing them to pass through the tools and across the top of the turret; *f* shows one of the tool holders; *g*, the cross-slide lever for operating the cross-slide; *h*, the circular gib that holds the flat turret in place; *i*, the feed-lever for throwing the automatic feed; *j*, the stock stop, which can be

thrown up, and against which the stock is fed in order to obtain the desired length; *k*, the back stop; *l*, the stops which can be arranged to control the various tools; *m*, the

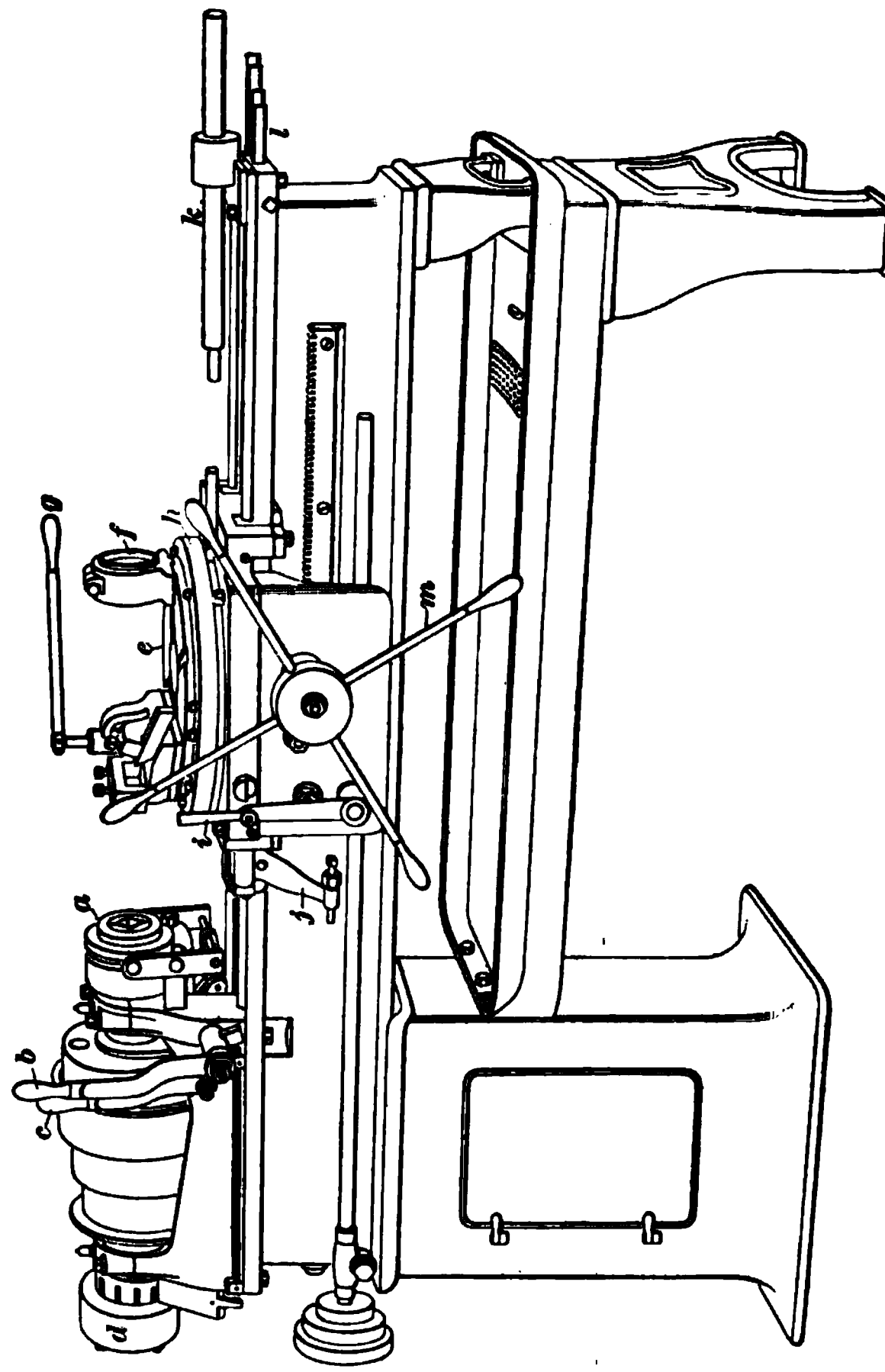

FIG. 38.

pilot wheel for feeding the carriage by hand. The roller feed is so arranged that when the chuck is loosened, the stock is fed forwards at once against the stock stop.

46. The turning tools used in this lathe are similar in principle to the box tools used on the ordinary screw machine, though they are somewhat different in appearance. Fig. 39

shows an end view of a turning tool for this lathe. The blade *a* is clamped in the tool block *b* by setscrews. The tool block *b* is pivoted so that it may be rotated by turning the screw *c*. This operation moves the point of the cutting

FIG. 89.

tool *a* toward or away from the work. The lever *d* may be used for quickly moving the tool to or from the work. The back rest *f* is adjusted to the work the same as in the ordinary box tools.

This flat style of turret gives great rigidity to the tools and their cutting edges, and this rigidity is not dependent on the length of the work. Ordinary box tools can only be used upon comparatively short work, while this style of tool will operate upon much longer stock.

AUTOMATIC SCREW MACHINES.

47. Characteristic Feature of Automatic Screw Machines.—The characteristic feature in the **automatic machines** is that the movements made by hand when operating the hand screw machine are made automatically in the automatic machines. These movements are brought about by a series of cams and levers that control the working of each part of the machine. The introduction of the

automatic controlling part makes the machine much more complicated than the simple hand machine.

48. Setting Up Automatic Machines.—Whenever a piece of a certain shape is to be made, a special cam must be designed that will give the proper movements to the parts. Every new shape of work requires a specially designed cam and a new arrangement of tools. These factors also vary for each make of machine.

The cutting tools are the same in principle for the automatic as for the hand machines; hence, no special description of this class of machines is necessary.

49. When to Use Turret Lathes.—Before a piece of work can be successfully performed with the turret machines, some special fixtures must be made and the machine adjusted; they then produce finished pieces much faster than the engine lathe.

In determining whether to use the hand turret or automatic machines, the amount of finished work to be produced must be considered. If only a few pieces are to be made, it will not pay to make special tools, or even to take the time to set up an automatic machine, until the number of pieces to be finished has so increased that the saving in time overbalances the cost of making special tools and fixtures. Hand machines may be employed for a moderate number of pieces, but if there are only a very few the engine lathe or a chucking machine should be used.

SPECIAL FORMS OF LATHES.

POWER-DRIVEN LATHES.

TOOLMAKERS' LATHE.

50. General Description of Toolmakers' Lathe.—The term **toolmakers' lathe** is applied to lathes having from 10 to 16 inches swing, and, in appearance, are similar to the regular screw-cutting engine lathe. They are equipped with taper attachment, compound rest, and special

chucks, and are made with a greater degree of perfection than is the ordinary engine lathe.

51. Special Chucks.—The **special chucks** found on toolmakers' lathes are used for holding rods or bars of different sizes. They are similar in principle to those used on turret screw machines. The collets shown in Figs. 2 and 3 are known as **push-in collets,** that is, they are pushed into a taper hole to close them. Another style of collet that works on the same principle is the **draw-in collet.** In the draw-in collet, the bevel on the large end slopes in an opposite direction from that shown in Fig. 3, so that, to close the chuck, it is drawn into a tapered hole in the headstock. This latter style is very commonly used on toolmakers' lathes.

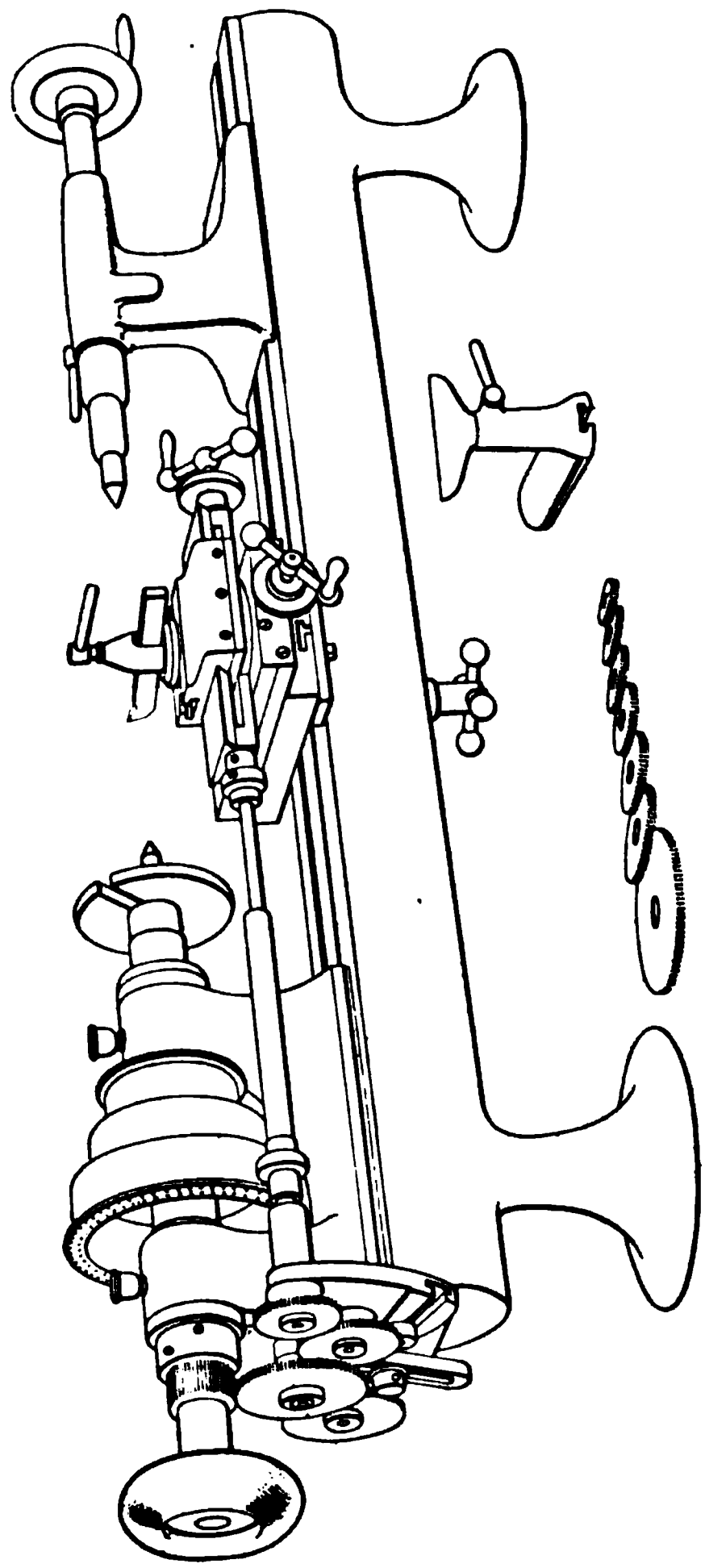

FIG. 40.

BENCH LATHES.

52. General Description of the Bench Lathe.—When small work must be finished with

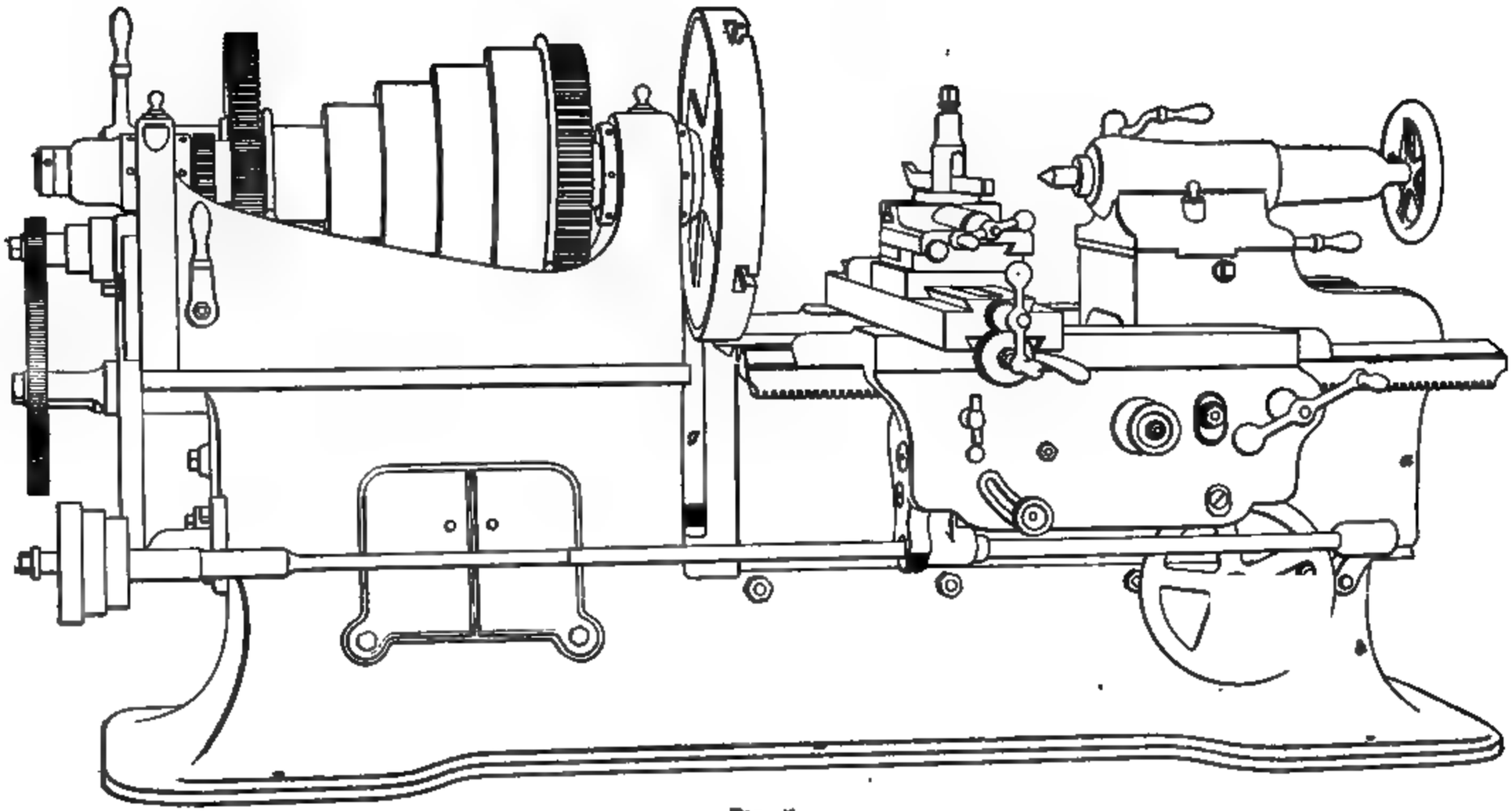

FIG. 41.

considerable accuracy, the ordinary engine lathe is too large and clumsy, and the hand lathe does not possess the accuracy or the attachments necessary to do the work. To finish this class of work, the **bench,** or **precision, lathe,** Fig. 40, may be used. This lathe is fitted with a double slide rest with automatic feed. The slide rest may be removed and another attachment supplied in its place for special milling operations. For cutting threads, a chaser bar is provided. This chaser bar is operated as the one described in connection with turret lathes, Fig. 33. Special draw-in collets are used for holding small rods. These lathes, while not in reality watchmakers' lathes, are similar to them. They are intended only for light work.

GAP LATHES.

53. Special Feature of the Gap Lathe.—A style of lathe that is often seen in shops where large lathes of considerable swing are seldom needed, is shown in Fig. 41. This is known as the **gap lathe.** Its principal feature is the second bed *a*, which slides upon the main bed *b*. When ordinary work is to be turned, the top bed is moved up very close to the face plate, nearly closing the gap *g*. It is then used as an ordinary lathe. When a particularly large piece is to be turned, the upper bed is moved away from the headstock by turning the hand wheel *c*, thus opening the gap *g* and giving the lathe its full swing over the main bed *b*.

TWO-SPINDLE LATHE.

54. Distinguishing Characteristics of the Two-Spindle Lathe.—A style of lathe that in many cases answers the same purpose is the **two-spindle lathe** shown in Fig. 42. For ordinary work, the lower set of spindles *a*, *b* are used, but when the piece is too large to be swung on the

lower set of spindles, the high ones *c*, *d* are used and the tool post blocked up by using a special cross-slide.

55. Blocking Up of Lathes.—It is common practice in lathe work, when the piece to be operated upon is a little too large to be swung in the largest lathe, to **block up** the headstock and tailstock by putting under them

FIG. 42.

wooden or iron blocks until the centers are sufficiently high above the bed to allow the work to swing. The gap lathes and the two-spindle lathes are intended to take the place of the blocked-up lathe. Thus far, the lathes mentioned have been of the same type as the standard engine lathe, with only slight modifications.

AXLE LATHES.

56. General Description of the Axle Lathe.—Specially designed machines are often made when there is enough of a particular kind of work to warrant them. Car axles may be turned on an ordinary engine lathe, but it is possible to do the work much faster on one of a special design, such as is shown in Fig. 43. This **axle lathe** is

FIG. 4

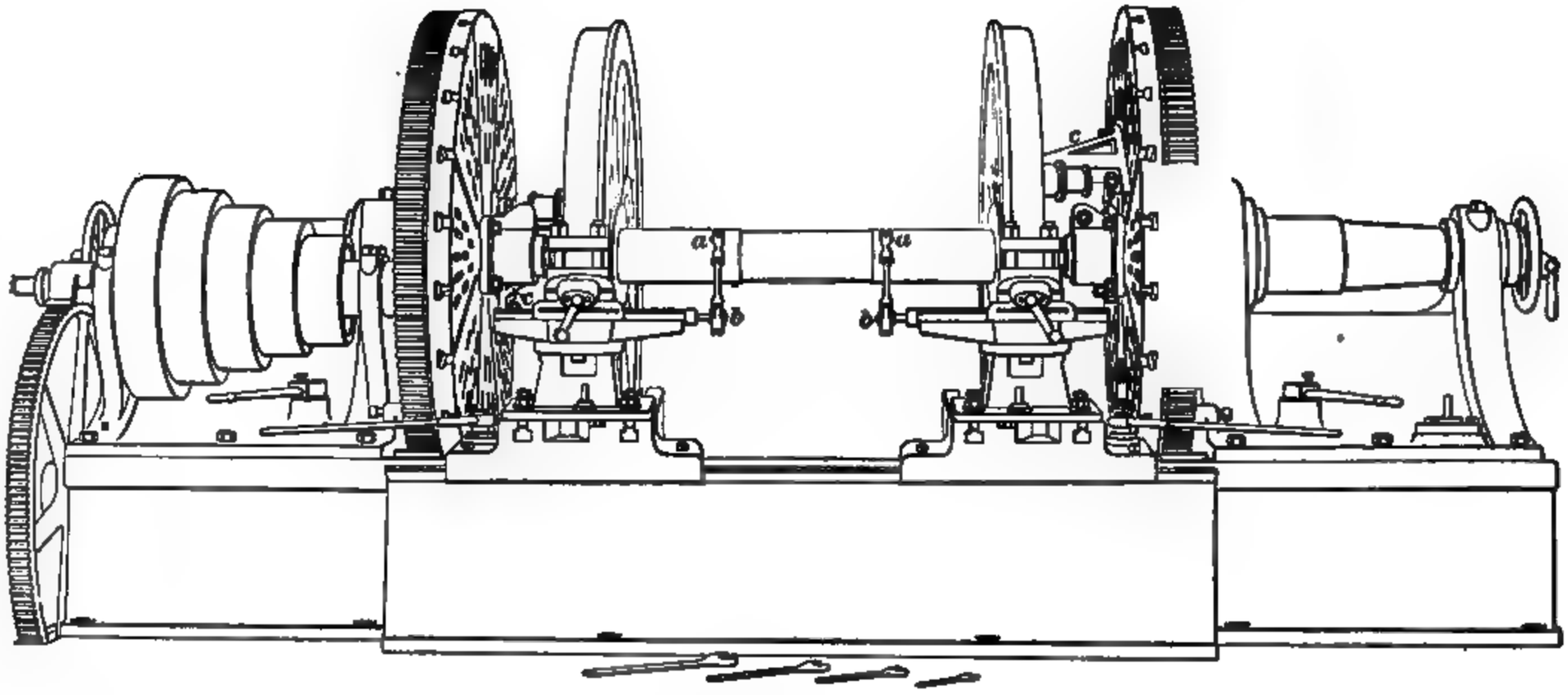

FIG. 44.

designed so that the two ends of the axle may be turned at the same time. To accomplish this, the driving head is placed in the center of the lathe bed. This allows the work to be turned on dead centers—a very desirable thing when accuracy is desired—and it also leaves the ends free, so that a cut may be taken on each end at the same time. The driving head is operated by gearing connected by a shaft with the cone pulley seen at the left. The axle shown in place in the lathe is handled by means of the overhanging crane.

57. Method of Driving the Work.—After the work is adjusted between the centers, the dog or driver is put in place. This should be an equalizing dog, or a two-tailed dog operated by an equalizing device, so that the force required to drive the work will not spring the axle. Chucks cannot be used, as they spring the work. Means are provided for keeping a large supply of soda water flowing on the tool during the cut.

WHEEL LATHES.

58. Fig. 44 shows a style of lathe especially designed for turning locomotive driving wheels after they have been pressed on to an axle. This lathe is designed with two driving heads and two tool rests, thus enabling the operator to turn both driving wheels at the same time. It will be noticed that there are no feed-rods along the bed to operate the tool carriages, as found in ordinary lathes. The tool carriage ordinarily used is similar to the compound rest, since it may be turned on its base and set at any desired angle. Two slides allow the tool to be moved in two directions, at right angles to each other. Screws for moving the slides are operated by a lever *a* connected to the feed-screws by ratchets *b*. These levers are moved automatically by levers and cams in a separate mechanism above the lathe to which they are connected by chains.

After the wheels on the axles are put between the centers,

the drivers *c* shown on each face plate are so adjusted against each wheel that it is driven from its face plate. These lathes may also be used for boring the tires of locomotive driving wheels, the tires being bolted to the face plate and bored and faced, as in ordinary face-plate work. This method of boring tires is not often employed, as they can be bored much better on a boring mill.

PULLEY LATHES.

59. Fig. 45 shows a type of lathe specially designed for turning pulleys. The lathe has two tool rests so that

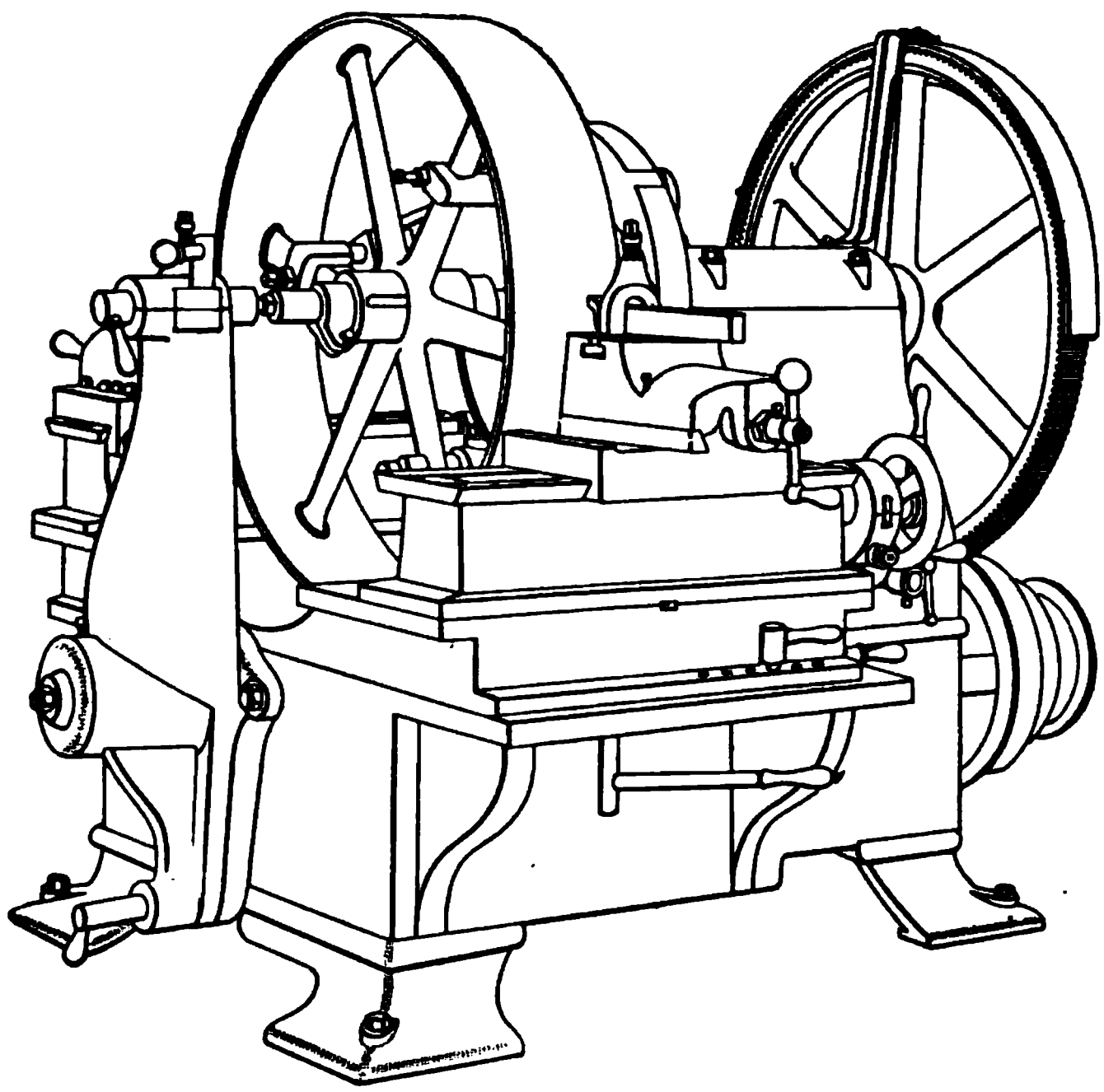

FIG. 45.

two tools may be used, one at the front and one at the back of the machine. Special driving dogs attached to the face plate drive the pulley by its arms.

HAND, OR SPEED, LATHES.

60. General Description of the Hand Lathe.—Hand lathes, or **speed lathes,** are the smaller sizes of lathes used for such operations as can be performed with tools held in the hand, or for such operations that require a higher speed of work than can be obtained by the ordinary turning lathe. These lathes are without back gears or slide rests. Fig. 46 shows a standard type of hand lathe. It is mounted on a table, which makes a convenient place for holding tools and work.

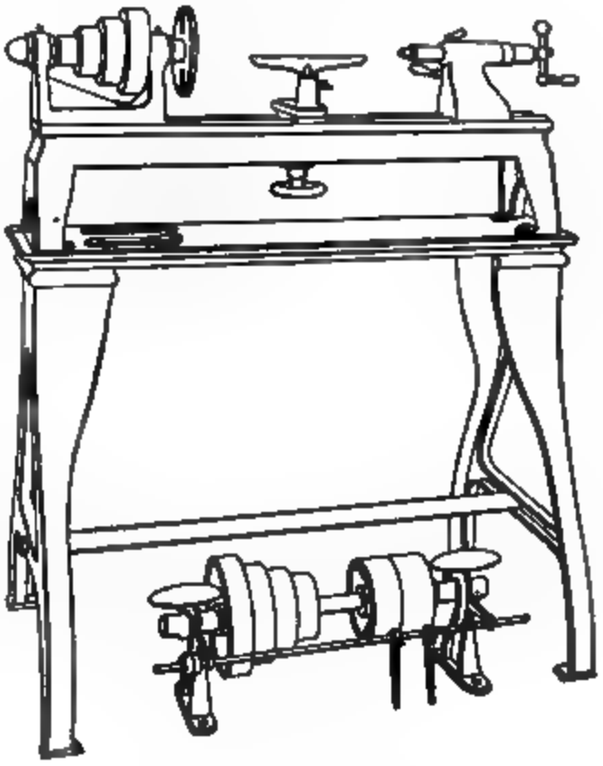

FIG. 46.

61. Use of the Hand Lathe.—Work that is of irregular outline, requiring the use of hand gravers, is often finished on this type of lathe. When a small chuck is fitted to the spindle of the lathe, it is very handy for turning or pointing small rods and pins, and a variety of similar work. Drilling may also be done very conveniently on certain classes of work. When much drilling is to be done, a tailstock with a lever attachment for feeding the spindle is more convenient than the screw attachment.

62. Special Centers.—When the lathe is used for drilling or reaming center holes, the drill is held in a chuck and the work pressed against the drill by the tailstock spindle.

FIG. 47.

When holes are to be

drilled in thin flat pieces, a **pad center,** Fig. 47, can be used in place of the **cone center.** When holes are to be drilled diametrically through rods or tubes, a forked center, or V block, Fig. 48, aids in holding the work true.

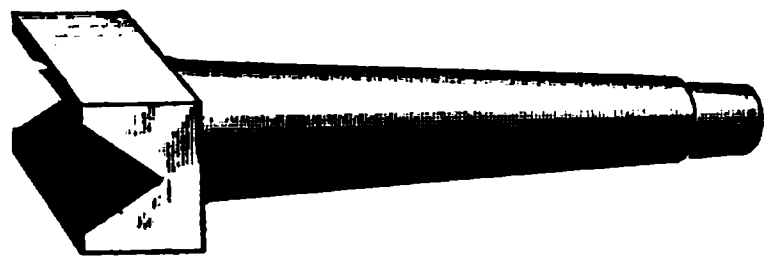

FIG. 48.

63. Hand Slide Rest.—Fig. 49 shows a **hand slide rest** that is often used on these hand lathes. The ordinary hand rest is removed and this is clamped in

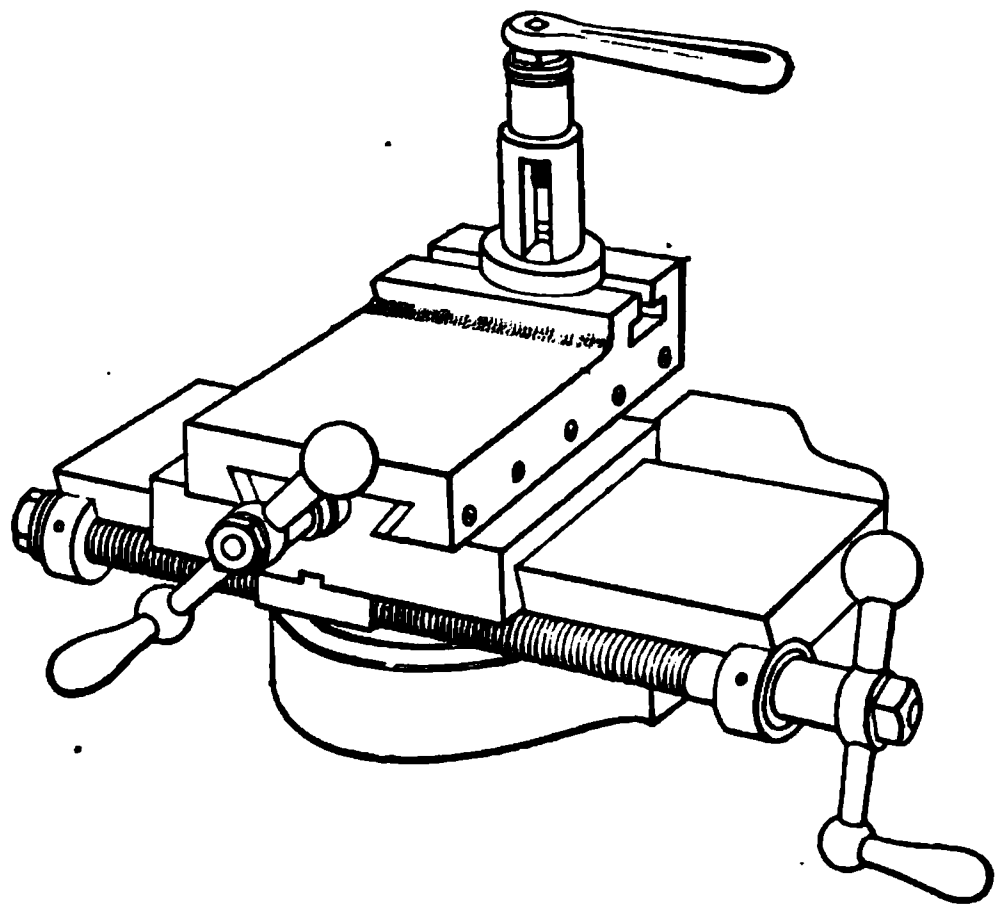

FIG. 49.

its place. A small tool can be held in the tool post, and for light work it is very convenient.

POLISHING.

64. Object of Polishing.—One of the principal uses for which the speed lathe is adapted is **polishing** cylindrical work. The various parts of a machine are polished to add to its attractiveness and beauty, and not to add to the perfection of its movements or to increase its efficiency. Parts of the machine that are fitted to each other, or are in unseen

places, should not be polished. When a piece is well polished, it is smooth and true, free from scratches, possesses brilliancy, is even in its appearance, and free from bright- and dull-colored streaks.

FILING.

65. General Consideration. — When a cylindrical piece is to be polished, it should be finished with a very smooth finishing cut on the lathe. It is next made smooth by **filing.** Just enough filing should be done to remove the tool marks, care being taken not to scratch the work. This scratching often occurs and is called *pinning.* Pinning is caused by the filings collecting in the teeth of the file and forming little balls of metal. When the file is passed over the work, these little balls of shavings will catch in the surface and produce deep scores or scratches. This will occur every time the file passes over the work until the file is cleaned. For cleaning the teeth of the file, a *file card* should be used. A file card is similar to a very stiff brush with very fine steel wires taking the place of the bristles. When the card is used, it is drawn across the file so that the wires follow in the spaces between the teeth. Ordinarily, this operation will clean the file, but if it does not, and the little bright spots of shavings are still seen, they must be picked out with a piece of soft-iron wire that has been flattened on the end. The flat end is laid on the file and moved across it in such a way that it will get under the ball of shaving and remove it.

66. Files for Lathe Work.—The best files to use for lathe work are the mill files. These are single-cut and there is less danger of their pinning than with the double-cut files. They also cut smoother.

67. Avoiding Pinning.—Pinning may be more or less avoided by properly holding the file on the work. When filing, the point of the file should be held to the right so that it is at an angle to the work, as shown in

Fig. 50. While held in this position, the file is moved across the work squarely in the direction of the arrow. This makes it appear as if the file were moving toward the left. Such, however, is not the case. Pinning may also be avoided at times by filling the teeth of the file with chalk.

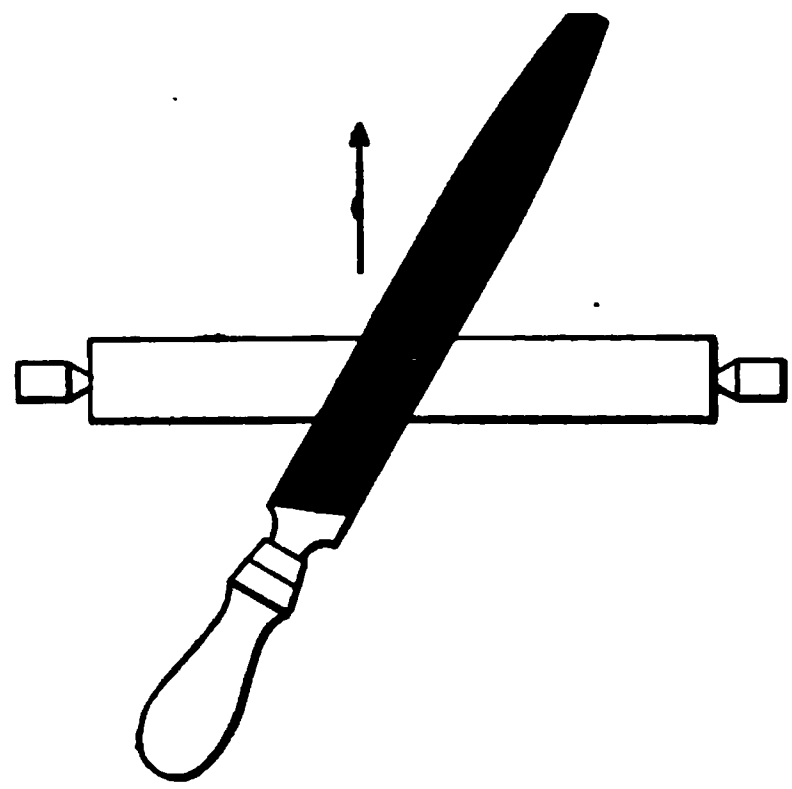

FIG. 50.

68. Speed of the Work for Filing.—The speed of the work for filing must be considered the same as the speed of the work for turning. If the file be brought against a rapidly revolving piece, like the face of a large pulley, or similar work, it will be found that the points of the teeth are instantly worn away, and that the file is as quickly destroyed as if it had been held against a rapidly revolving emery wheel. The cutting speed of a file should not be much over 40 or 50 feet per minute on iron or steel.

When the work is small in diameter, it may be run at quite a high number of revolutions, so that in making one stroke of the file over the work, the work will make a number of revolutions. This is desirable when an attempt is being made to keep the work true. It is difficult to file the same amount from every point along the work, since one part of the work will be filed more than another, with the result that the longer the filing operation is continued, the more untrue the work becomes.

69. Even Filing.—When the work is large in diameter, it will be necessary to run it at a lower number of revolutions per minute. Suppose the rate of file strokes were one a second, and the rate of revolutions of the work the same. Then, for one stroke of the file forwards, the work would make half a revolution, and it would be filed half around its

circumference. While the file is being drawn back for the second stroke, the work begins its second revolution and the file again cuts half of the circumference of the work. It will also be on the same side of the work. In this case, the file has cut twice on one side of the work, and has entirely skipped the opposite side. This will be continued so long as the rate of file strokes and revolutions of the work are the same. It may be seen from this that *to keep the work nearly true, the file strokes should be slow enough to allow the work to make a number of revolutions for each stroke of the file.*

USE OF EMERY.

70. Use of a Polishing Stick.—After the tool marks have been removed by filing, the piece is treated with a coarse piece of emery cloth, which will remove the file marks. After the file marks have been removed, a finer grade of emery is used until the coarser emery marks have been removed, and so on, using finer grades of emery until the desired polish is obtained. Emery cloth should be pressed very hard against the work by using a polishing stick, which is passed over the tool rest of the lathe and under the work, the emery cloth being held between the stick and the work. By pressing down on the outer end of the stick, the emery cloth can be brought with great pressure against the work.

71. Speed for Polishing.—The speed for polishing is quite different from that used for filing. The higher the speed the better, provided the work and the machine are balanced so that the high speed does not shake the machine too badly. When polishing, the stick should be moved so that it will not remain in one position on the work, but will move back and forth, in order that the lines cut by the particles of emery will be constantly crossing and recrossing one another. Oil should be supplied to the work and the emery, in a quantity sufficient to keep the surface moistened, but not so that it will be thrown from the machine in great quantities.

72. Care of the Centers.—When a piece of work is being polished, so much heat may be generated as to cause it to expand along its entire length. If, in the first place, the dead center has been made fairly tight, it will become locked in the end of the work, the oil having been burned out, and will be twisted off. This should be carefully guarded against by keeping the centers free and well oiled.

73. Finishing a Polished Surface. — When the piece is nearly finished, the pressure of the emery is reduced and the movement along the length of the work is slower. For the finest grades of polish, fine crocus cloth is used and still finer polishes are produced by using rottenstone. Not much machine work is carried to that perfection of polish that requires crocus cloth or rottenstone for finishing. A very high polish may be obtained by using a much worn piece of No. 0 or 00 emery cloth.

Grain emery is often used in the place of emery cloth. Bare wood, or pieces of lead on the face of the wood, is used to hold the emery against the work. The particles of emery

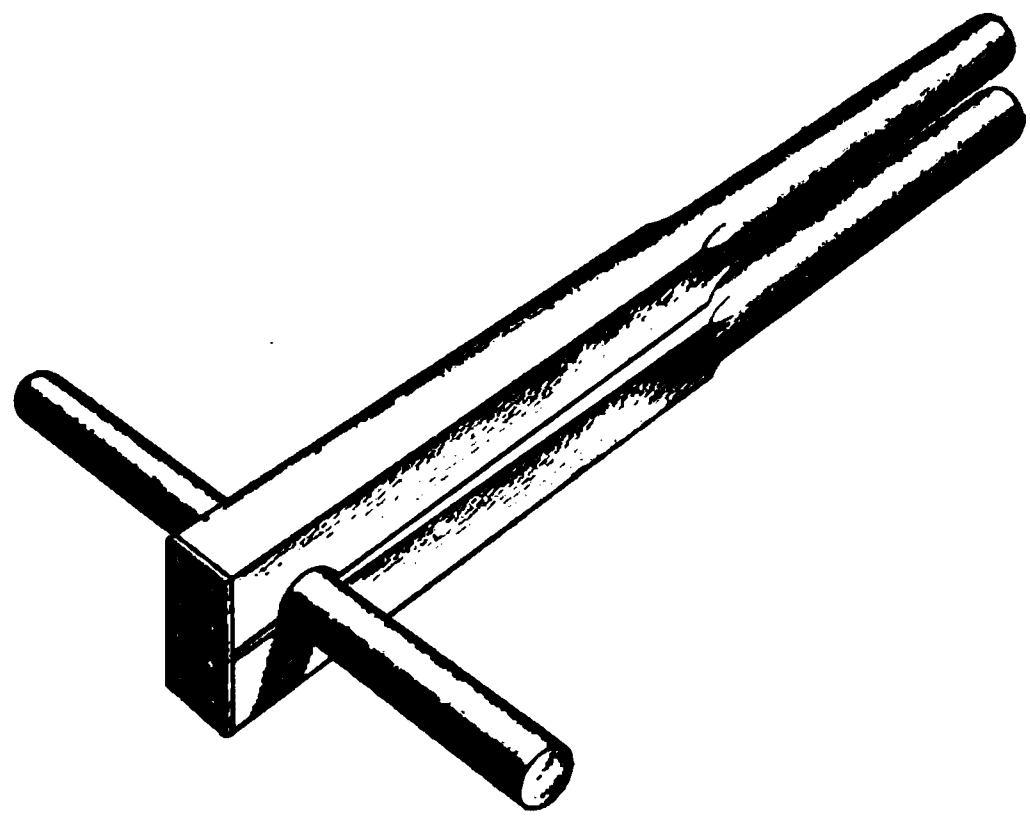

FIG. 51.

embed themselves in the soft wood or in the lead and so are held from being thrown from the work. Oil is used as before.

74. Polishing Clamp.—For plain cylindrical work, a very convenient and effective way of holding the emery against the work is brought about by fastening two pieces of wood together at the end with a leather hinge. The two inside faces of the pieces are cut out at a short distance from the hinged end, so that they will fit over the shaft, as shown in Fig. 51. By pressing the outer ends together, considerable pressure is brought against the shaft. Either emery cloth or grain emery may be used with this device.

SPECIAL LATHE WORK.

USE OF STEADY REST.

75. General Considerations. — When long shafts are to be turned, it is necessary to support them along their length. If there is no support, they will bend and vibrate so that it will be very difficult to take a cut from them. Fig. 52 shows a form of steady rest that is usually supplied with engine lathes. When in use, this steady rest is bolted to the top of the lathe bed at a place where it is desired to support the shaft. The rest is made in two parts, with a hinge *a* at the back and a latch or clamp *b* at the front. After the steady rest is clamped on the bed, the latch is unclamped and the top half turned back so that the shaft can be put in the lathe between the centers. The top half is then closed and clamped in place. If the shaft be perfectly true, the jaws *c* of the

FIG. 52.

steady rest may be adjusted so that they just touch it. Screws *d* stand against the ends of the jaws and hold them against the work. After the jaws have been adjusted so that they all touch the shaft, but do not spring it, they are clamped by the bolts *e*, which pass through the jaws and the rest. The jaws should be oiled where the shaft turns on them.

76. Spotting the Shaft.—If the shaft does not run perfectly true, a **spot** must be turned on it that does run true and the jaws of the steady rest adjusted to the spot. If the steady rest were adjusted to a place that did not run true at first, it would be found that after it was adjusted, the shaft would appear to run true and would continue to do so until the jaws were again loosened, when the shaft would spring to its natural shape and wabble as before. When a shaft is to be spotted for the steady rest, a very fine light cut is made (of any diameter so long as it is true) to give the jaws a fair bearing.

If the shaft is quite long and it is desired to put the steady rest near the middle of the shaft, it may be found that a cut cannot be taken in the middle of the shaft to spot it because of its extreme flexibility. Cuts near the end of the shaft, where it is better supported by the lathe centers, may be taken. In such a case, a cut would be taken near the dead center and a spot made. Having the shaft thus spotted, the steady rest may be adjusted to this place and the second spot turned farther along. In this way, the spots may be moved along the shaft until the middle is reached.

77. The Cat Head.—On some classes of work, it is desirable to use the steady rest on a part that does not run true and it is not desirable to spot the place on the shaft. In such a case, a device called a **cat head** is adjusted on the shaft. A cat head is a collar that fits loosely over the shaft to the place where the steady rest is to be adjusted, and is here clamped upon the shaft by a number of setscrews, as shown in Fig. 53. By varying the adjustment of the setscrews at the ends, the cat head may be set to run true.

After it has been set, the jaws of the steady rest may be adjusted to it the same as to a larger shaft. In the case of the slim shaft just mentioned, the cat head may be used instead of making the series of spots from the end.

If the shaft is long, it may be necessary to use two or more steady rests. When the tool and carriage have fed up

FIG. 53.

to the steady rest, it must be moved to another position to allow the cut to pass. It is difficult to turn long shafts and have them remain straight, even if the spots are turned with great care. When the shaft is rolled, its surface is more or less under tension, and, as it is turned, this tension is removed, thus allowing the shaft to spring so that the spot that was turned true when the shaft was rough is untrue after it is turned.

FOLLOWER RESTS.

78. Another method of supporting shafts while being turned is by the use of the **follower rest.** Such a style of rest is shown in Fig. 54. This rest is bolted securely to the carriage and travels with it. When it is used, a cut of the desired diameter is started at the end of the shaft. As soon as a spot is made true, the two jaws *c*, *c* are carefully

adjusted to the work *w*. Since there is a tendency to spring the shaft away from the tool, it will be seen that the two jaws are sufficient to support the work.

79. Solid Bushings.—Another method of supporting the work is by means of the follower rest supplied with

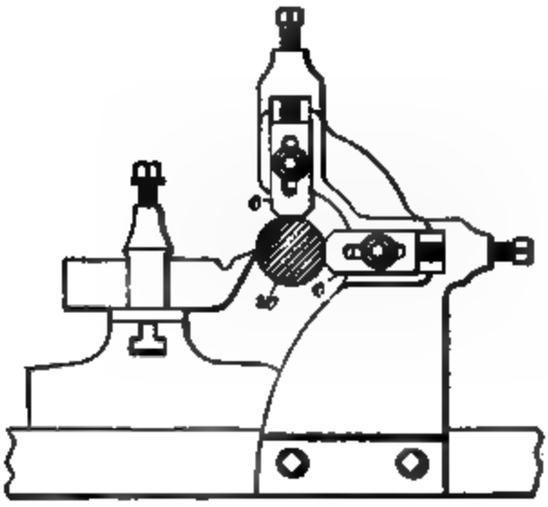

FIG. 54. FIG. 55.

bushings, so that as soon as the end of the shaft is turned, it enters a rigid bearing. Such a follower rest is shown in Fig. 55. Bushings *b* bored to different diameters are used for different sizes of shafts. This style of follower rest gives a very perfect support for the shaft. When used, the tool is set slightly in advance of the follower. The closer the tool is set to the follower rest, the less danger there is of its chattering.

SHAFTING LATHES.

80. Special Shafting Turner.—When much shafting is to be turned, a regular **shafting lathe** is used. These lathes have very long beds and the carriage is fitted with a **shafting turner.** The shafting turner consists of a follower rest with bushings to fit around the shaft, similar to that shown in Fig. 55. It also has two, three, or four

tool slides, so that an equal number of tools may be used to cut at once. When used, two or three roughing tools precede, and one finishing tool follows the rest. Thus, the shaft is roughed and finished at one cut.

81. Torsion in the Shaft.—Much power is required to take a cut with four tools cutting at the same time, and, in the case of a long shaft, the torsion in it, when the tools are at the beginning of the cut, is considerable. To overcome this, long shafts are driven from both ends.

STRAIGHTENING.

82. Straightening Machines.—After the shafts are turned, they are apt to be crooked for the reasons mentioned above. They are straightened on a regular **shafting straightener,** which consists of a number of conical rolls so arranged that, as the shaft is revolved and drawn between the rolls, it is bent and straightened.

83. Straightening Small Work.—A special straightener is not always necessary in order that a shaft may be made true. Small straightening presses may be used for bending the crooked shaft to make it straight. These straightening presses are so constructed that the shaft to be straightened may rest upon two supports from 1 to 3 feet apart, depending on the size of the straightener. An arm projects from behind the machine, midway between the points of support, and over the shaft in such a way that a vertical screw may be used for pressing the shaft down. When the shaft is to be straightened, it is supported between the centers of the lathe, and, while revolving slowly, it is marked with chalk on the high side. It is then removed from the lathe, taken to the straightener, and bent sufficiently to make it straight. A number of trials may be necessary to make the shaft run true. If the bend is a short kink, then all the straightening should be done at that

place, but if the original crook is a long sweep, the work should be straightened by a series of applications of the press along the work. These presses are sometimes supported on wheels and set directly on the lathe bed. After the work is tested, the press is moved along the bed to the crooked place on the shaft, and, after loosening the lathe centers, the machine is used for straightening the work.

84. If such a press is not at hand, a shaft may be straightened after marking by taking it from the lathe and resting it upon two solid blocks of wood, with the marked part up between the blocks. A third block is rested on the shaft between the supporting blocks, and is struck a blow with a hammer or sledge. Care must be taken not to deliver too heavy a blow or the work will be more crooked than before.

85. Sometimes, when the proper straightening devices are not at hand, slender work may be straightened between the lathe centers, but such practice injures the lathe and should not be used except in special cases. The work is revolved between the lathe centers and the high side marked. A bar or lever is then put over a tool in the tool post and under the work in such a way that when the lever is pushed down by hand the work will be sprung up. By turning the work so that the marked part is down, it can be so sprung that, after a number of trials, it will run quite true. If the bend is a long uniform one, it can be straightened by simply bending or springing the bar as just indicated. If the shaft appears to have a short bend, while either side of the bend appears to be straight, this short bend can be taken out by springing up the shaft with the lever, as described, and striking a few blows with the hammer on the top of the shaft on the bent part. The hammering should be light at first or the bar will be found to be bent as badly as it was before, but to the opposite side. This hammering has a peening action that tends to slightly stretch the shaft on the side struck.

86. Straightening Leadscrews.—This method of peening is sometimes used for straightening large or long lathe leadscrews after they have been threaded. A special tool is used for peening the threads, as shown in Fig. 56. This tool is made thin at its edge, so that it will go between the threads down to the root. It is concave, so that it fits around the screw for a short distance. When the screw is tested and found to be untrue, it is sprung up with the lever at the bent place, and, while held in this sprung position, a few of the threads on the top side are peened with the peening tool and a hammer. With some skill, a screw that was badly bent may be quickly straightened. It may be seen that this method of straightening screws will not do when the pitch of the leadscrew must be accurate, since it will slightly stretch the screw. For ordinary purposes, however, the stretching of the screw caused by slight peening would be so little that it would scarcely be perceptible. The most accurate leadscrews are always straightened without peening.

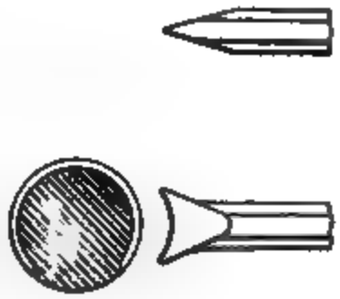

FIG. 56.

USE OF STEADY REST IN CHUCKING.

87. Application of Steady Rest to Bars.—Fig. 57 shows how a bar may be held when it is desired to operate on the end for boring or turning. In adjusting the steady rest, the bar is held by one end in the chuck, while the other end is supported on blocks of wood at a height equal to that of the dead center. The steady rest is moved very close to the chuck and the jaws adjusted to touch the bar. After the jaws are adjusted, the steady rest is opened by turning back the top, but without changing the adjustment of the jaws. It is then moved down the bar and clamped in the desired place. By this method of adjusting the jaws,

the work is held in line with the headstock spindle. This method of supporting work is often used for very large

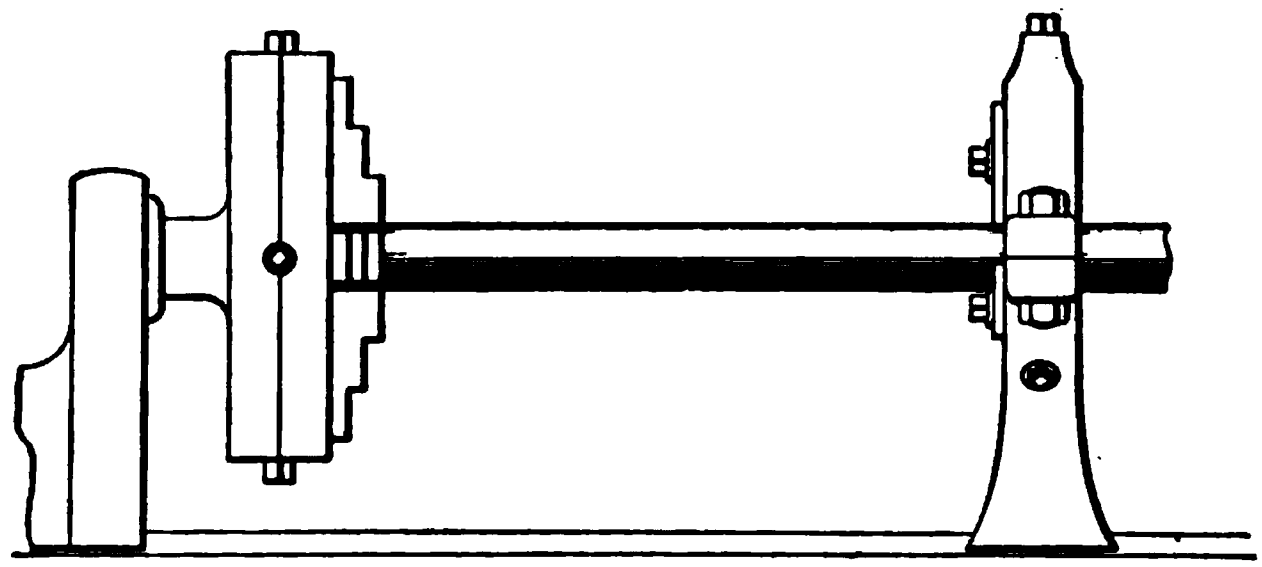

FIG. 57.

pieces, and, when necessary, very large and heavy steady rests are used.

88. Application of Steady Rest to the Turning and Boring of Large Guns.—The forgings for large guns are usually operated upon while one end is supported in and driven by a chuck, and the body of the piece rests on one or more steady rests. These steady rests are of a specially heavy design. Fig. 58 illustrates one of them supporting the inner tube for a 12-inch gun, *a* being the tube and *b* a large chucking drill used for boring the inside of the tube. In this gun work, the roughing and finishing tools are specially designed drills and reamers, and the cutting speeds are very slow, it having been found that speeds exceeding 6 or 8 feet per minute are usually unprofitable, on account of the fact that they cause excessive wear and breakage of the costly tools.

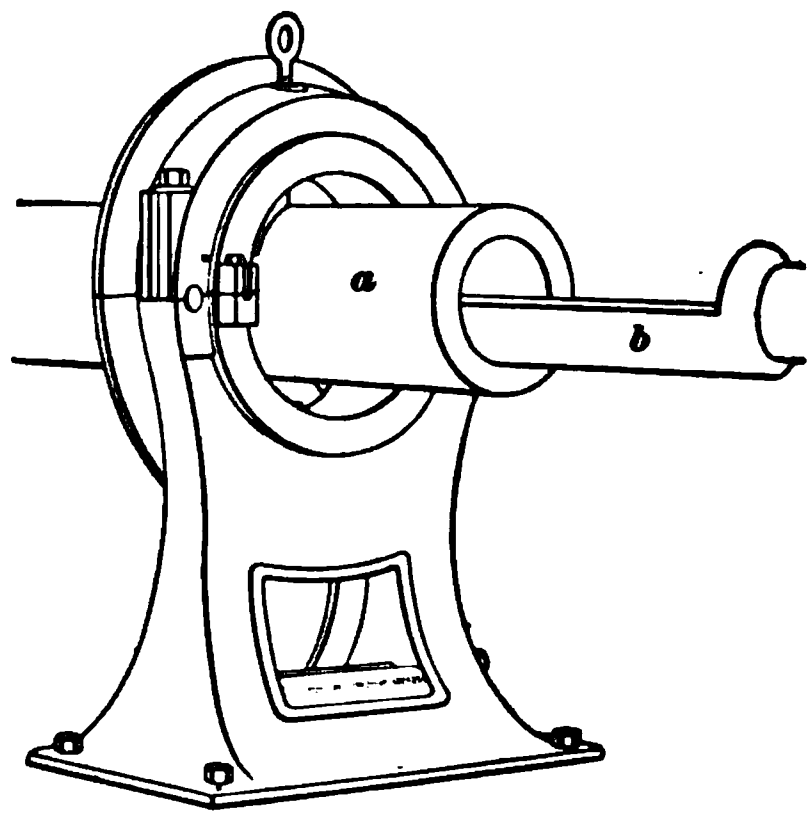

FIG. 58.

TURNING BY MEANS OF A ROTATING TOOL.

89. Occasionally a job has to be done that requires the turning of a trunnion, or projection, upon a large and heavy

FIG. 59.

casting. If such a casting *b* were placed in the lathe and rotated upon centers, it would require a very large lathe to do the work. Fig. 59 illustrates a method by means of which this difficulty has been successfully overcome. The casting in question is long and heavy and is supported at one end upon a regular carriage *a*, and at the farther end upon a special carriage not shown in the illustration. The work requires that the portions *c*, *d*, and *e* be turned to three different diameters. They are roughed by means of a tool attached to the special arm *f* attached to the face plate *g*. After the three diameters have been roughed out, the face plate *g* is unscrewed from the spindle and the attachment *h*, shown in the foreground, substituted for it. This attachment carries hollow mills, as shown at *i*. The mill shown at *i* is intended for finishing the portion *c*, and, after this portion is finished, the mill shown at *j* is substituted to finish the portion *d*, and the mill shown at *k* to finish the portion *e*. The tool or mill always revolves at the same distance from the face plate or end of the spindle, the work being fed into or past the revolving tool by means of an ordinary feed upon the carriage *a*.

PLANER WORK.

(PART 1.)

WORK OF THE PLANER.

THE MACHINE.

1. Action of the Planer.—The natural function of the planer is to produce a flat surface. This is accomplished by causing the work, which is fastened to a table that has a reciprocating motion, to pass back and forth under a cutting tool; the tool is fed across the work at right angles to the line of motion of the table.

2. Names of Parts.—A standard type of a modern planer is shown in Fig. 1. This machine consists of a **platen** *a*, which slides in V-shaped guides on top of the **bed** *q*. Heavy **housings** *b*, *b* are securely bolted to the bed, the movable **cross-rail** *c* being bolted to the front face of the housings. The cross-rail carries one or more **saddles** *d*, *d* (two in this case); these saddles have the **planer heads** *e*, *e* attached to them. Each head has a **slide** that is operated by the **down-feed handle** *f*. For holding the tool, each head is provided with suitable **tool clamps,** as *g*, *g*. The saddles can be moved along the cross-rail by

For notice of copyright, see page immediately following the title page.

means of **feed-screws**; for feeding by hand each feed-screw has a **feed-screw handle** *h*. The platen is driven

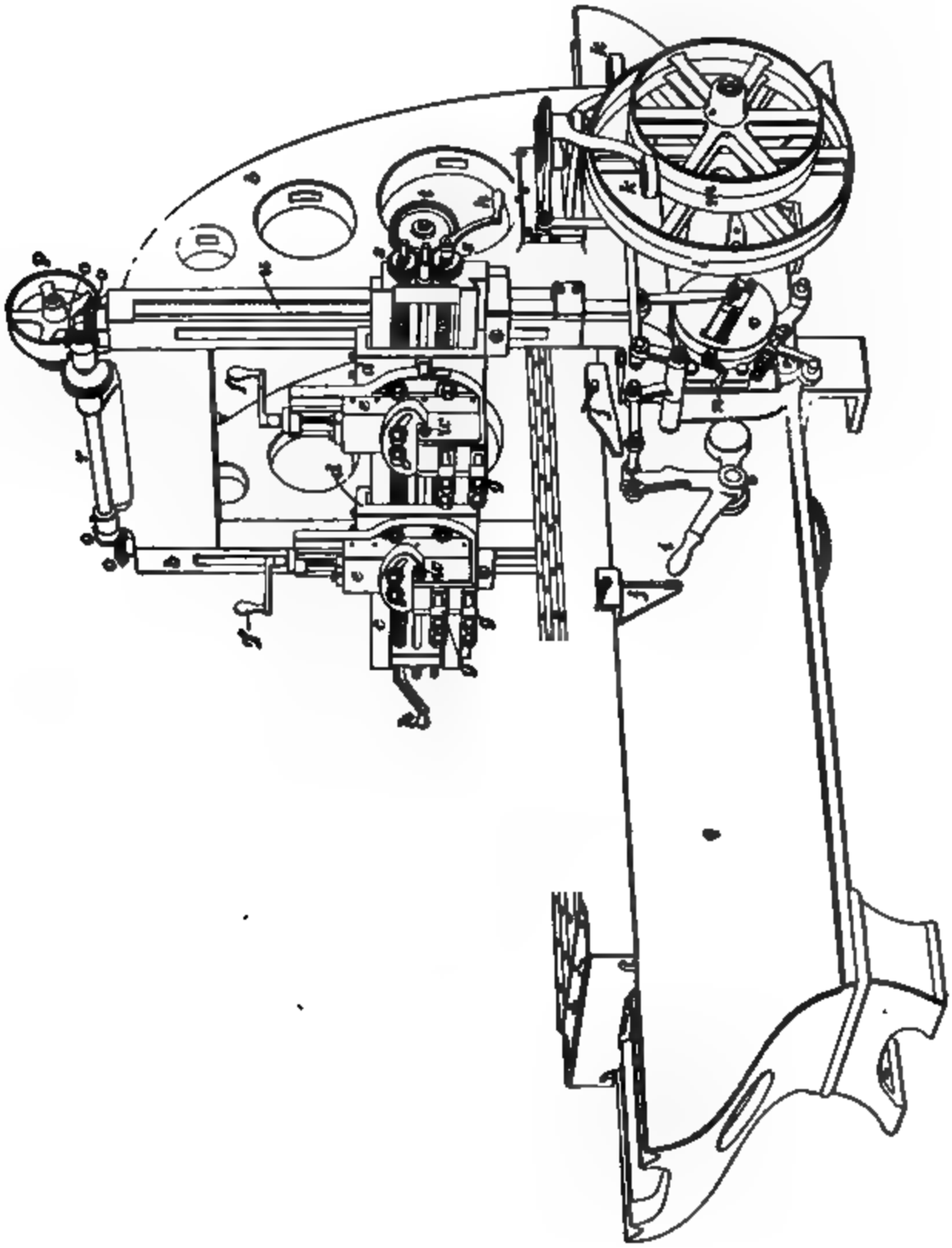

FIG. 1

by gearing operated by belts placed on the **driving pulleys** *l* and **reversing pulleys** *m*. The direction in which

the platen moves is changed by **tappets** *j*, *j*, which engage the **reversing lever** *i*, which is connected in turn to the **belt-shifting levers** *k*, *k*. The cross-rail may be raised or lowered by means of screws within the housings; these screws are operated simultaneously by **bevel gears** *o*, *o*, one pair of which is fastened to the screws mentioned, while the other pair is fastened to the shaft *r*. This shaft is driven by spur gearing, which, in turn, is driven by a belt placed on the pulley *p*.

METHODS OF DRIVING.

3. Two Methods Commonly Used.—There are two methods of imparting motion to the planer table or platen. One is by a system of spur gearing, in which the power is transmitted from the belts to the table by means of gears. Planers thus driven are called *spur-geared planers.* The other method is by means of a spiral gear that engages with a rack on the under side of the platen. The gear is driven by gears and shafts, which, in turn, are driven by the belts. From the kind of driving mechanism used, such planers are called *spiral-geared planers.*

4. Spur-Geared Planers. — Fig. 2 shows how the driving gears are arranged on a **spur-geared planer.** Three shafts pass through the bed and have their bearings at the ends. Shaft *1* projects through the front side of the planer bed sufficiently to receive the driving pulleys *l* and *m*, Figs. 1 and 2. This shaft, near the back side of the bed, carries the pinion *a*, Fig. 2, which engages with the spur gear *b* on shaft *2*. Near the center of shaft *2* is a pinion *c*, which engages and drives a spur gear *e* carried on shaft *3*. This gear is the largest and heaviest in the train of gearing and is sometimes called the **bull-wheel.** On the under side of the platen, and between the guides, or V's, is a rack *f*, which engages with the bull-wheel *e*.

If we follow the motion of the gears when the belt-driven pulleys are moving in the direction indicated by the arrow *k*,

it will be found that the table will move in the direction of the arrow *n*. In order to reverse the direction of motion, two belts are used; one of these is an open belt and the other is a crossed belt. It will be seen by reference to Figs. 1 and 2 that there are two pulleys of each size on the shaft, one of each set being a loose pulley. When one belt is rotating the shaft *1* in one direction, the other belt runs in an opposite direction on the loose pulley of the other

FIG. 2.

set. When the reversing occurs, the driving belt is run off the tight pulley to the loose pulley beside it, while the other belt is moved from its loose pulley to the fixed pulley beside it. This at once changes the direction of rotation of the shafts, and, consequently, the direction of motion of the machine. When the end of the stroke is reached, the reversing levers at once change the belts back to the original position and the planer moves forwards as before.

5. Quick Return.—It will be noticed in Figs. 1 and 2 that the driving pulley *l* and the return-stroke pulley *m* have different diameters. The pulleys on the counter-shaft to which these are belted also have different diameters. By this combination, the planer is made to run backwards on the return stroke at a rate of speed 2, 3, or 4

times as great as the forward, or cutting, speed. When planers are thus designed, they are said to have a **quick-return motion.** This method saves considerable time over the old-style machines, which required as much time for the return stroke as for the forward stroke.

6. Spiral-Geared Planers.—In the **spiral-geared planers,** two driving belts running in opposite directions

Fig. 3.

on tight and loose pulleys are used, the same as in the spur-geared planers. Fig. 3 shows a top view of a spiral-geared planer. The two driving pulleys are shown at *l* and *m*. It will be noticed that the shaft that carries the pulleys is parallel to the line of motion of the platen, while in the spur-geared planer shown it was at right angles to it. On the end of the belt-pulley

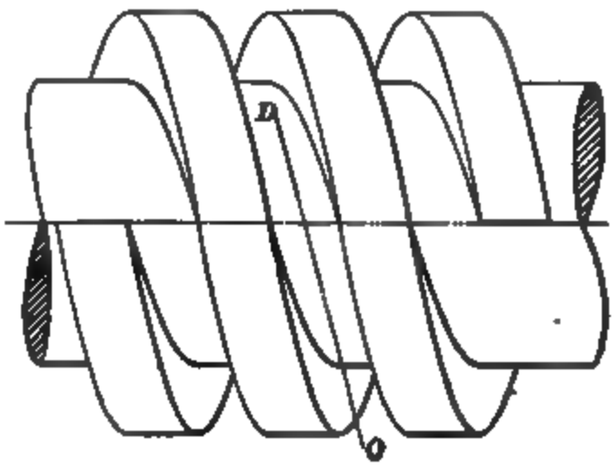

Fig. 4.

shaft is a small bevel gear *a*, which engages with a large bevel gear *e* on the shaft *c*. On the other end of the shaft *c* is a spiral gear, or worm, *f*, which engages with the rack on the under side of the platen and is shown in dotted lines in the illustration. It may be noticed by examining the threads of a worm or any screw, as, for instance, that shown in Fig. 4, that the threads are not square with the axis of the screw, but make some other angle than 90°, as shown by the line *OD*; the angle depends on the diameter of the screw and its pitch. On account of this fact, in a spiral-geared planer, the shaft *c* is set at such an angle that the line of the threads is at right angles to the line of motion of the platen, in order to give a direct pull. The rack on the under side of the table is specially cut, so that the worm fits it correctly. It is claimed that these spiral-geared planers are very smooth in their action.

SIZE OF PLANERS.

7. Definition.—The size of a planer is indicated by the width and height of the largest piece that will pass through its housings and the length of the longest piece that can be planed on its table. Thus, a 40″ × 40″ × 10′ planer means that a piece 40 inches square will go through the housings and the table will take a piece 10 feet long.

8. Planer Heads.—Ordinarily, planers are equipped with but one head, but when specially ordered for particular work, two heads may be used on the cross-rail, as shown in Fig. 1. Large planers are frequently equipped with four heads, two being placed upon the cross-rail, as shown in Fig. 1, and the other two, called **side heads,** on the housings below the cross-rail. These side heads are used when special undercuts are being made, or when it is desired to face the sides at the same time that the top is being finished. There are some other types of planers used for special kinds of work, but they are modifications of the standard shape shown in Fig. 1.

FASTENING WORK TO THE PLATEN.

THE PLANER CHUCK.

9. When a piece is to be planed, it must be securely fastened to the platen in some manner. This operation is called **setting the work.** The manner of holding the work on the platen depends on the shape and size of the work. It may be held in a regular planer chuck or vise, by the use of bolts and clamps, by pins and jacks, or by special holding devices designed for the purpose.

FIG. 5.

10. Description.—Fig. 5 shows a common type of **planer chuck.** It is fastened to the platen by bolts that may be slipped into slots at its sides, one of which is shown at *a*. The base of the chuck is circular, and is made in two parts, so that by unclamping the two bolts, one of which is shown at *b*, the other being at the opposite side of the chuck, the top part may be swiveled around in order that the jaws may be set at any angle. The bottom of the upper part is graduated to degrees for determining the angle when setting the jaws. One jaw *c* is fixed; the other jaw *d* may be moved to the proper position to hold the work. When work is to be held in the vise, the jaw *d* is moved against the work, and the block *e* is moved against the rear of the jaw. The block *e* is kept from slipping back by means of the strips *f*, *f*, which drop into the notches cut in the chuck, as shown. The nuts *k*, *k* in the jaw *d* are now screwed down, and it is tightened against the work by means of the setscrews *g*, *g*. Finally, the nuts *k*, *k* are tightened once more.

11. Square Planing.—Suppose that a rough cast-iron block 2½ inches square is to be planed square and true. If it is desired that the block be made with considerable accuracy, it should be planed all over with roughing cuts before any finishing cuts are taken. The work is put in a chuck and a cut taken over one side. After the work is planed on one side, it is given a quarter turn in the chuck, and is then clamped for planing the second side. Before taking the cut, it must be known that the finished side of the work is set perpendicular to the table, so that the cut on the second side will be square with the one previously finished. When the planer chuck is true and in good shape, the jaw *c* will be square with the bottom of the chuck, so that if work with a flat face be clamped against it and a cut is taken, the planed surface will be square with the flat face in contact with the jaw.

If the work is not true, care must be taken in clamping it, or the finished face will not be held squarely against the jaw. Suppose the work *w* to be tapered, as shown in

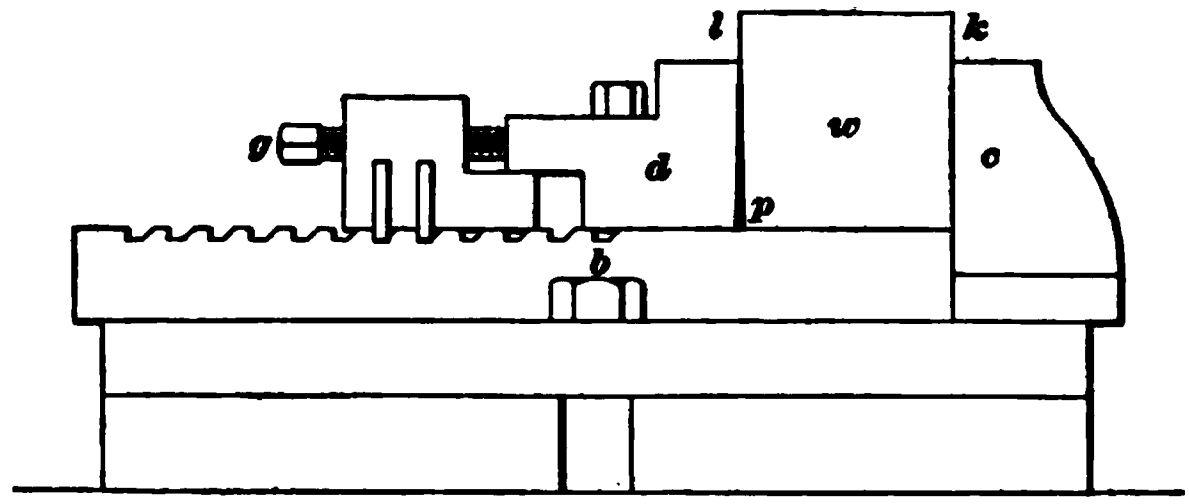

FIG. 6.

Fig. 6. The face *k* of the work is finished, but the face *l* is rough. When the jaws are tightened against the work, the pressure will come against the work at the edges of the jaws, while, at the bottom, the jaws will not touch the work. If the jaws are tightened, they will remain in the same position relative to the work, so that even though the face *k* has been planed, it will not be held flat against the jaw *c*. When a cut is taken with the work thus held, the latter will not be square with the finished face. If it is found that

this condition exists; the work may be made to come flat against the jaw by putting thin pieces of packing *p* (strips of paper or tin) between the jaw *d* and the lower edge of the work, as shown. This will cause pressure against the lower edge of the work and hold it squarely against the jaw *c*.

12. Instead of putting the packing pieces *p* between the jaw *d* and the work, Fig. 6, a false jaw *f* with a rounded

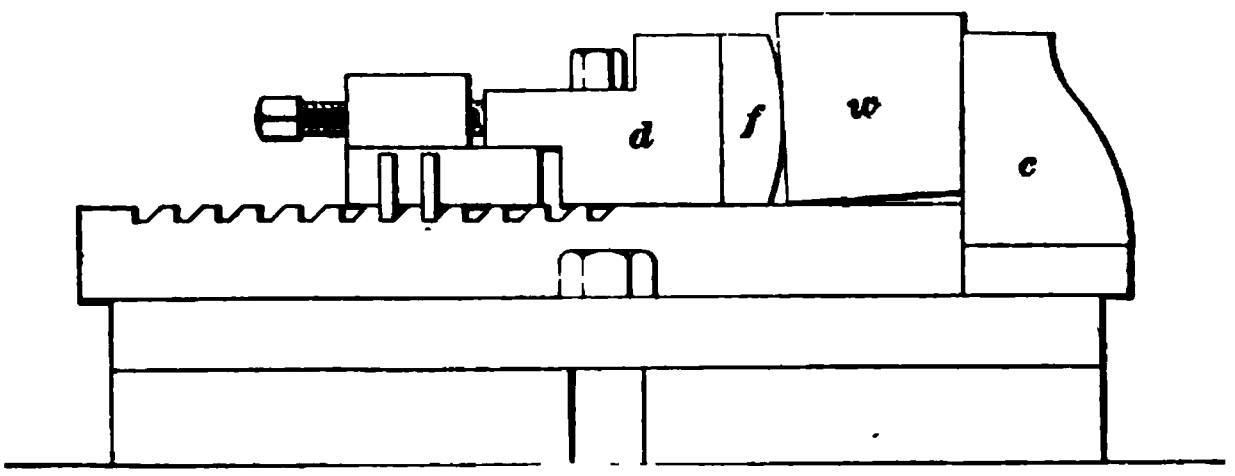

FIG. 7.

face, shown in Fig. 7, may be used. This rounded face will allow the work to turn slightly so as to bring its finished face squarely against the jaw *c*.

If no false jaw is available, the same end may be attained by placing a straight piece of copper or iron wire between the work and the movable jaw. The wire should be long enough to touch the jaw and work at every point of contact.

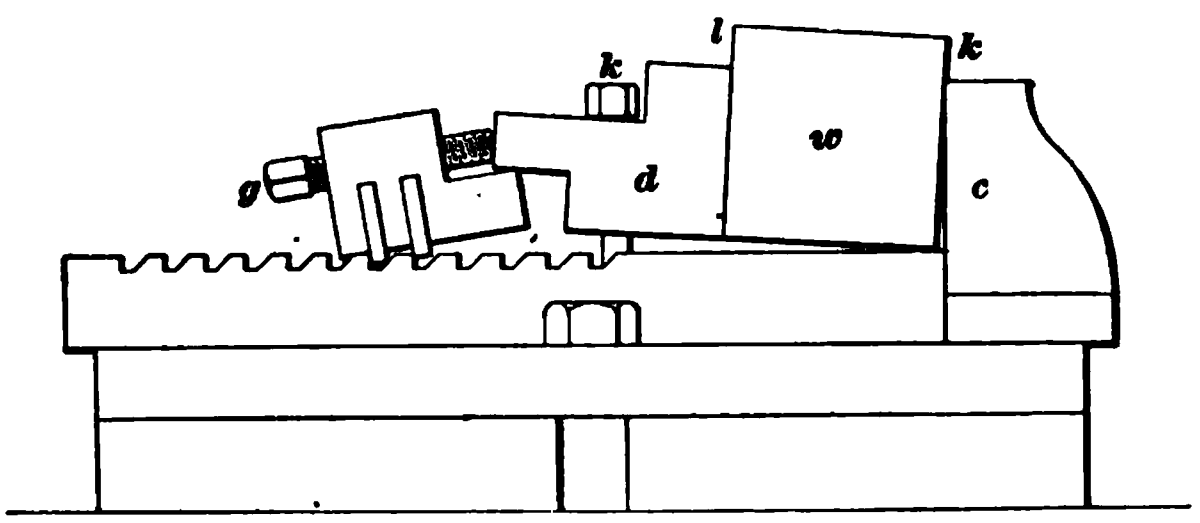

FIG. 8.

13. Another source of error that must be guarded against is caused by the jaw *d* rising slightly from its seat when the screws *g* are tightened. Fig. 8 shows, somewhat exaggerated, the result of tightening the screws *g* on the work before the bolts *k* are tightened sufficiently to hold the

jaw *d* to its seat. In this case, the faces *k* and *l* of the work are parallel, but the lifting of the jaw *d* will throw the work out of true with the jaw *c*, and if a cut is taken over the top, the work will not be square.

14. If the work projects beyond the ends of the vise jaws, the setting of the finished side may be tested by putting the stock of a try square *t* on the platen and pushing the blade against the finished side *k*, as shown in Fig. 9.

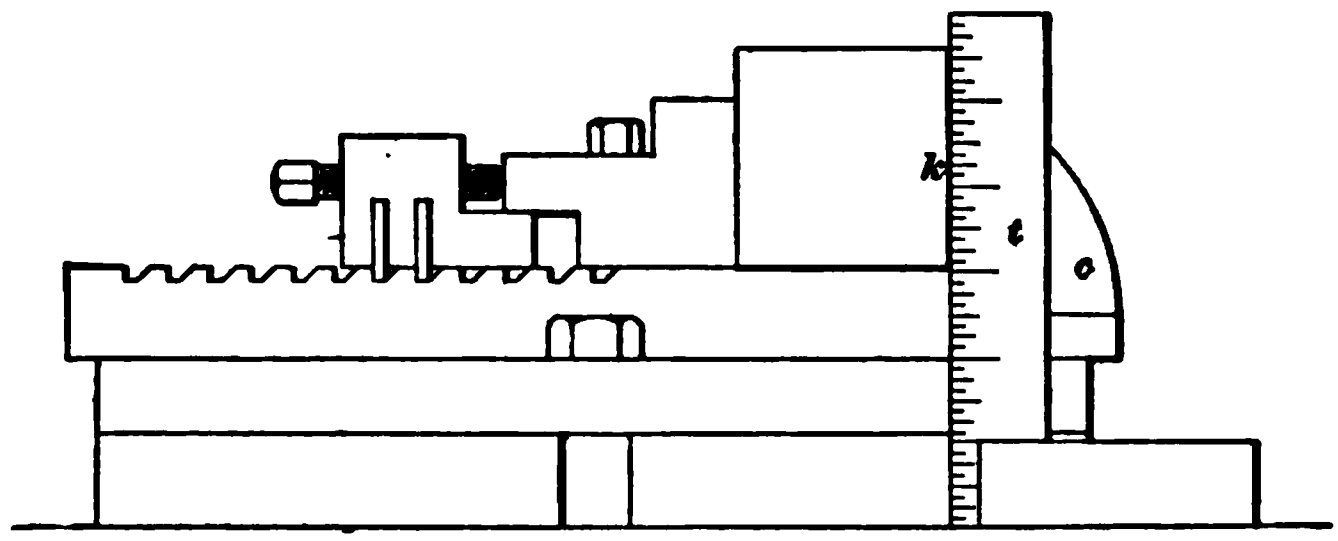

FIG. 9.

If the blade is in contact only at the top, or at the bottom of the finished side *k*, it shows that the piece is not properly chucked. In order to bring the finished face square, strips of paper or tin may be put between the work and the jaw *c* at the top or bottom of the jaw.

15. Making Sides Parallel.—If the work is large enough to allow it to be set flat on the bottom of the chuck, as shown in Fig. 6, it will usually be near enough true to be planed parallel. To make sure that the work is fairly bedded, that is, in contact with the bottom of the fixed jaw, it is well to put pieces of paper under each end of the piece and after the jaws are properly tightened, to strike the top face of the work with a lead or Babbitt hammer. It can be determined by the sound if the piece is down solid; also the pieces of paper can be tested by pulling to see if they are tight.

When the work projects beyond the sides of the chuck, the bottom of the work may be set parallel to the bed by tapping with a hammer and testing by calipering, as shown in Fig. 10. If the work is short and cannot be planed on its

top face when set down on the bottom of the vise, it must be held up. To set it true so that the top face may be planed parallel with the bottom face, its setting may be

FIG. 10.

tested by inside calipers, measuring from the bottom of the chuck to the under finished face, and adjusting the work by tapping it with a soft hammer until the measurements are the same at all points.

16. Use of Parallel Strips.—A much quicker way is to use **parallel strips** *b*, *b*, Fig. 11, under the work *w*, and set the work down on these strips. Parallel strips are thin pieces of cast iron or steel that have been carefully machined so that the opposite faces are parallel with each other.

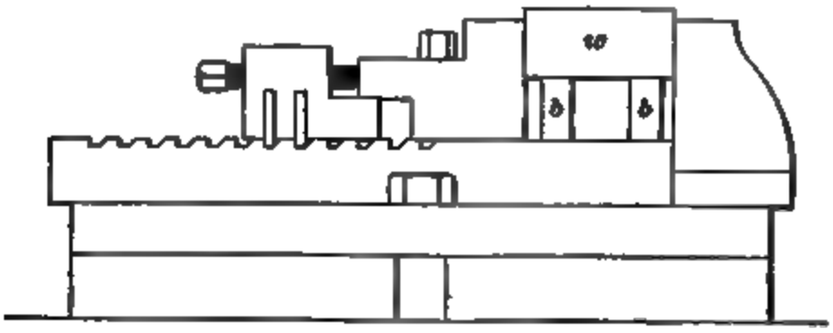

FIG. 11.

They are made of various sizes and thicknesses, to be used for different thicknesses of work, and are usually made in pairs. After the roughing cut is taken over the top face of the work, it is well to caliper its thickness at the ends to make sure that it is being planed parallel.

17. Use of the Surface Gauge.—Suppose that one side of a tapering piece of work is to be planed. Then a line is laid out and marked by prick-punch marks to aid in

setting the work correctly in the vise jaws. For testing the setting, a **surface gauge,** one design of which is shown at *S* in Fig. 12, may be used. A surface gauge consists of a heavy base *b* with a flat face that carries a standard *c* of some kind, to which a pointer *p* is attached by a clamping device in such a manner that it can be moved along the standard and clamped anywhere. In addition, the pointer

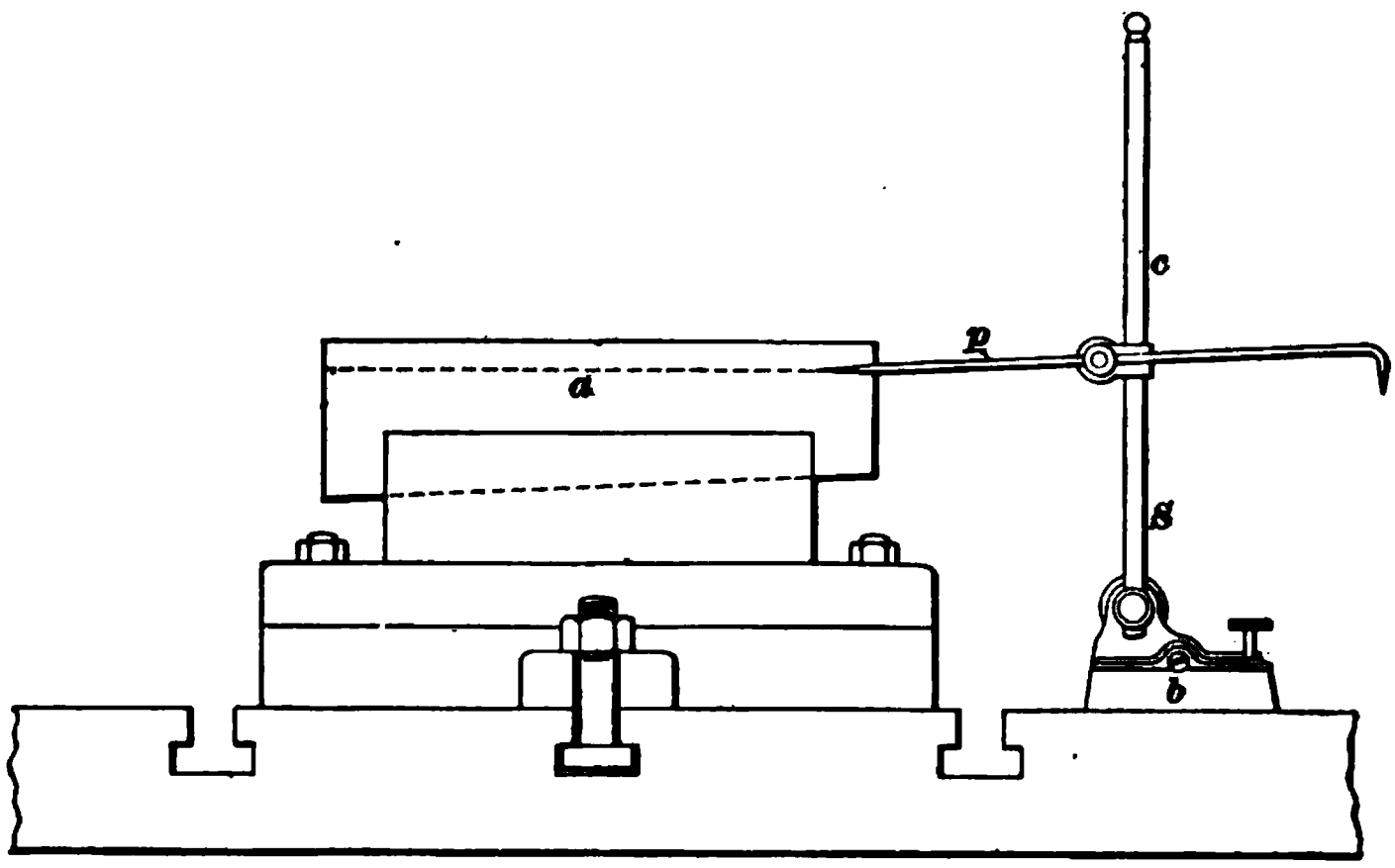

FIG. 12.

can be swiveled around the clamping device. In use, the pointer *p* is adjusted to one end of the line *a* drawn on the work, which in Fig. 12 is shown held in the planer chuck. The base resting fairly on the platen, the surface gauge is now moved to the other end and it is noted if the pointer coincides again with the line *a*. If it does not do so, the work is shifted by tapping it lightly with a hammer and the testing and shifting is repeated until the surface gauge shows the line *a* to be parallel to the platen.

18. When a number of tapering pieces are to be planed, tapered strips may be used in the vise to set the work on, in the same way that parallel strips are used to produce parallel work. When these tapered strips are used, the work is bedded fairly on them; there is then no necessity of setting each piece separately by the aid of a surface gauge.

19. A surface gauge may not only be used in setting work to a line, but is also well adapted for testing the parallelism of surfaces with the platen. For instance, let a piece *c* having the profile shown in Fig. 13 be held in the chuck, and let it be required to adjust it so that its surfaces *a* and *b* are both the same height above the platen. Then the contact point of the surface gauge is placed on the surface *b*, while the

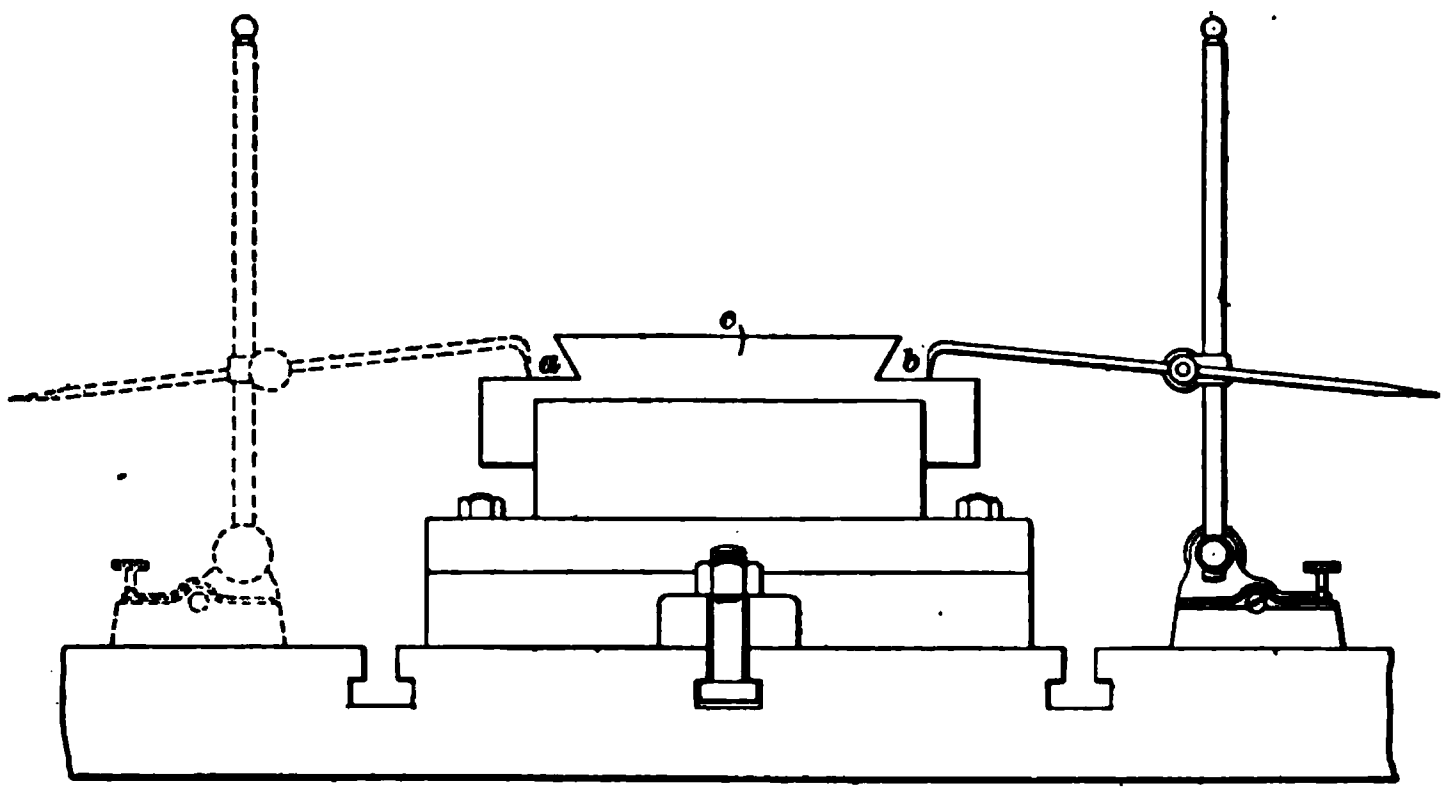

FIG. 13.

base rests fairly on the platen; the surface gauge is now placed on the other side of the work in the position shown in dotted lines, and it is observed if the contact point touches the surface *a*. If it does not do so, the work is moved as required; the contact point is readjusted, and the setting of *a* and *b* is tested again. This operation is repeated until the surface gauge shows *a* and *b* to be at the same height above the platen.

20. Special Jaws.—For some classes of work, **special jaws** may be made and fastened to the regular jaws of the planer chuck for holding particular shapes of work. But if many such pieces are to be made, it is better to make a special jig, or holding device.

21. Truing the Planer Chuck.—When it is found that the planer vise is out of square, thus causing the work to be held untrue, the vise should be trued by taking a very

light, smooth cut over the jaw *c*, Fig. 5, and also over the bottom of the jaw on which the work rests. Before this cut is taken, the chuck should be cleaned thoroughly, and care should be taken that there are no chips or dirt between it and the planer platen.

BOLTS AND CLAMPS.

22. Method of Applying.—If the work is large, or for other reasons cannot be held in the ordinary chuck, it may be fastened to the platen by **bolts** and **clamps.** T slots are cut in the top of the platen to receive the boltheads, and holes are provided for pins to keep the work from slipping.

23. Fig. 14 shows a part of a planer platen with a flat block *a* fastened to it by the use of bolts *b*, *b* and clamps *c*, *c*

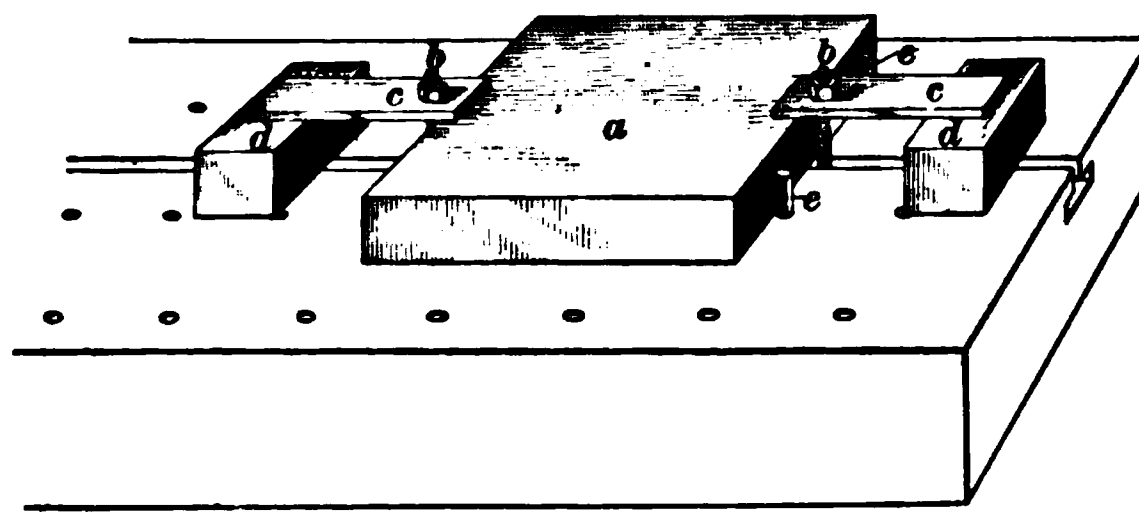

FIG. 14.

resting on packing-blocks *d*, *d*. These clamps are pieces of flat bar iron 2 inches by $\frac{5}{8}$ inch, or of similar proportion, with holes drilled near the ends for the bolts to pass through. When applying clamps to a piece of work, care should be taken to adjust them so that the bolts come very near the work, as shown in Fig. 14; also that the packing-blocks *d*, *d* are the same height as the work, or slightly higher. Fig. 14 also shows how stop-pins *e*, *e* are used to prevent the work from sliding along the platen while a cut is being taken. The stop-pins are merely removable pins inserted in holes drilled in the platen.

24. Imagine that in Fig. 14 the piece *a* is the packing-block, and that *d* is the work. Then, with the bolt *b*

close to the packing-block, the tightening of the nut will cause the clamp to grip the block tightly, while the work will be left comparatively loose. For this reason, the bolt should always be placed as close as possible to the work. Now, if the packing-block is too low, the bolt must bend when the nut is tightened, owing to the clamp sloping downwards. Furthermore, the tendency will be for the clamp to push the work away.

This is shown in Fig. 15 (*a*). It will be observed that as the nut on the bolt is screwed down, the clamp bears only against the edge of the work and the packing-block, and that the pressure is acting not directly at right angles to the platen, but at an inclination to it. In consequence of this, there is a tendency for the work to slide away from the clamp. Since the clamp is in line contact with the extreme edge of the work, it is very likely to mar the edge badly. For these reasons, care must always be taken to make the packing-block high enough to insure a fair bearing of the clamp on the work. When the packing-block is just the same height as the work, and the clamp is bent and applied with its convex side downwards, as shown in Fig. 15 (*b*), or when the clamp is so thin as to readily bend when the nut is tightened, the same effect will be had as if the packing-block were too low. That is, there will be a tendency to push the work away and also to mar the edge. Now, if the packing-block is slightly higher than the work, the edge of the clamp will be in contact with the surface of the work, and any tightening of the nut will, by reason of the bending of the clamp, bring it in more intimate contact with the surface of the work.

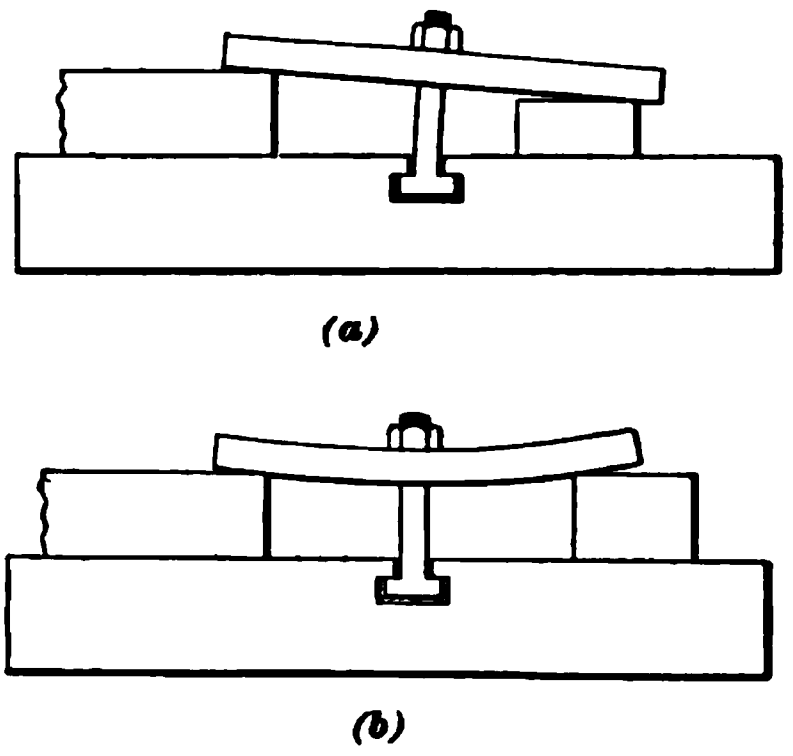

FIG. 15.

25. Shapes of Planer Bolts.—Planer bolts are ordinarily made with large square and flat heads; they are slipped into the T slots in the platen from the ends. This form of head is the strongest. It sometimes occurs in clamping work to the platen that when heavy work is set in place, it is desired to apply a bolt and clamp to some part of the inside of the work without moving the latter. For this purpose, a special form of bolthead is used that allows the bolt to be slipped into the T slot from above, instead of from the ends. Fig. 16 (*a*) shows such a bolthead; two opposite sides are cut away so that it will drop into the slot. After it is in place, it is given a quarter turn, so that the head comes under the lips of the T slot. The bolt is kept from revolving when the nut is tightened by the ends of the head coming against the sides of the T slot.

Another method of applying clamping bolts to such places is by means of a T-shaped nut, as shown in Fig. 16 (*b*).

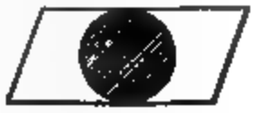

(*a*) (*b*)

FIG. 16.

This nut may be slipped along the T slot and under the work to the desired place, after which a bolt may be screwed into it.

26. Bent Clamps.—Besides the common flat clamp shown at *c* in Fig. 14, the **bent clamp** *a* shown in Fig. 17 is often used. A bent clamp is convenient when it is desired to keep the end of the bolt out of the way of the tool as it passes over the work, or when no bolts long enough for

a straight clamp are available. It is a rather expensive clamp to make and does not possess any particular advantages over a straight clamp; for this reason, it is rarely used

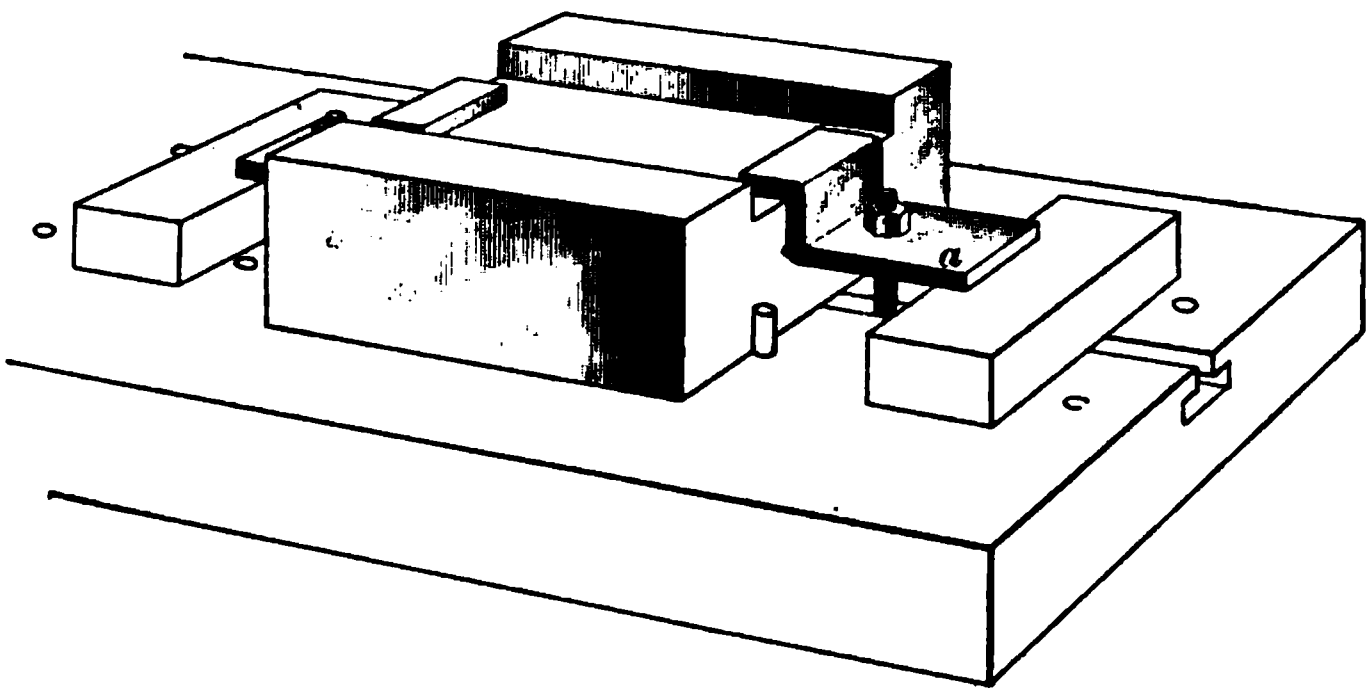

FIG. 17.

by experienced planer hands, except for work where a straight clamp will not answer.

27. When a number of pieces of the same thickness are to be planed, a clamp may be made as shown in Fig. 18. This clamp has one end bent over at a right angle; the bottom is cut off parallel to the top, so that when it rests squarely on the table, the top of the clamp will be level. With this style of clamp, packing-blocks are unnecessary.

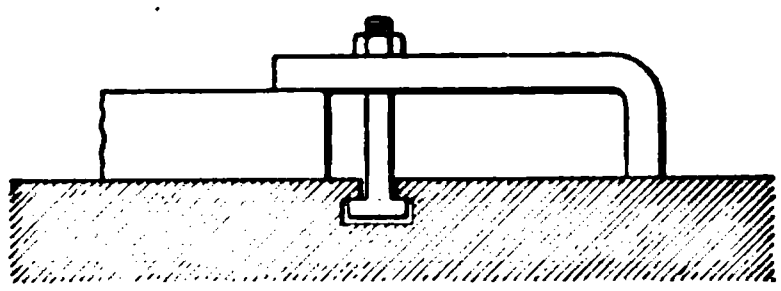

FIG. 18.

28. U Clamps.—Fig. 19 shows a form of clamp that is very convenient when it is desired to remove the clamp without removing the nut from the bolt. This clamp is made of square iron and is bent into a **U** shape, with an opening sufficiently wide to allow it to slide over the shank of a bolt. It will also be found convenient on account of the fact

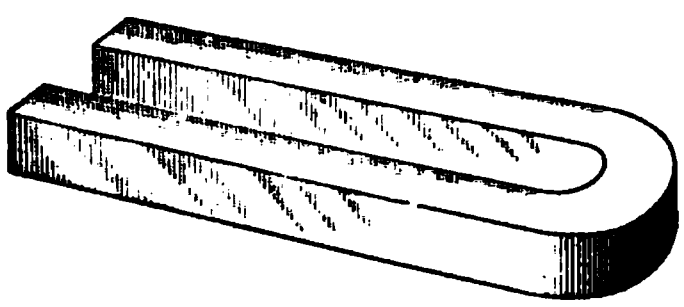

FIG. 19.

that the bolt can be moved along the clamp in order to get the bolt into the most desirable position. Likewise, the clamp can be moved to suit the work in case the bolt must occupy a certain position. Taking it all around, this is probably the most useful form of clamp for general work, since it has the widest range of application. It is applied in the same manner as the ordinary flat clamp. Always place a washer between the clamp and the nut used for tightening it, in order to have a fair bearing for the nut.

29. Finger Clamps With Bolts.—It often occurs that some flat face is to be finished all over when the work is of such a shape that there is no place to put the clamps except on the top face. In that case, the work is often planed as far as the clamps allow; the clamps are then moved to the planed part and the cut is continued.

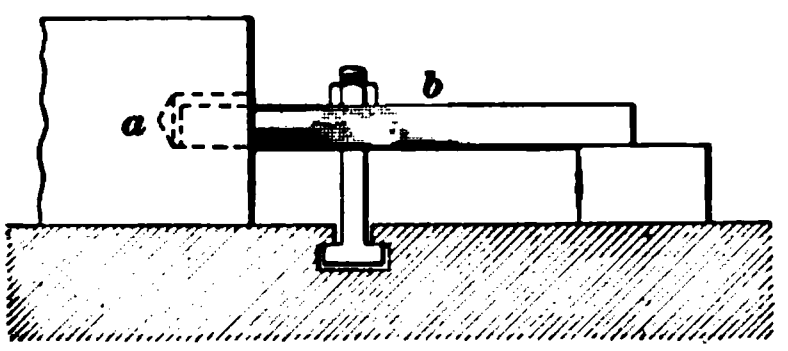

FIG. 20.

Sometimes, however, it is possible to drill holes in the side of the work and use **finger clamps,** which save much time. Fig. 20 shows a side view of a piece of work *a* with a finger clamp *b* in place. The clamp has one end forged or turned round so that it will fit loosely into the drilled hole. If these holes are drilled into the solid casting, they may be filled after the work is finished. The conditions of each particular case will determine whether a finger clamp can be used or not. When it is inadvisable or objectionable to drill holes for them, the work must be held in some other manner.

PLANER PINS.

30. Shape.—A very convenient method of fastening work to the planer is by the use of **planer pins,** or **screw plugs,** one of which is shown in Fig. 21. One end *a* is

turned round to fit the holes in the platen, while the other is left square and tapped for a steel setscrew *b*. Fig. 22

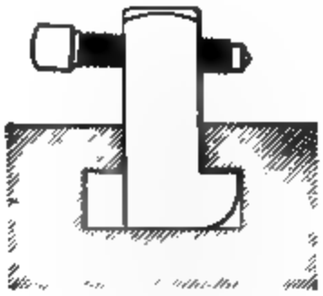

Fig. 21. Fig. 22.

shows the same style of pin made to fit in the T slot of a planer platen.

31. Method of Using.—Fig. 23 (*a*) and (*b*) shows how they may be used. In Fig. 23 (*a*), **planer strip** *a*, which has been previously planed square, is bolted to the platen so that the edge against which the work bears will be true with

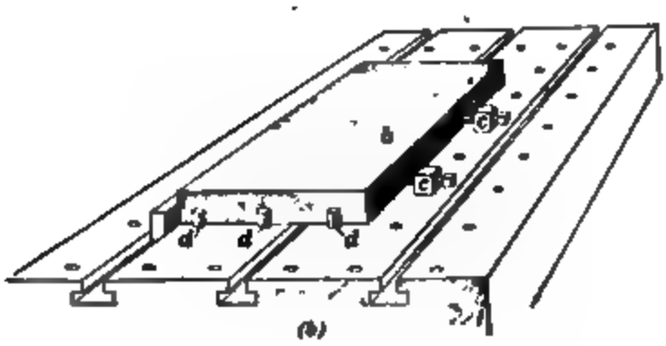

Fig. 23.

the line of cut. Sometimes two pins like *c*, *c* are used in place of the strip *a*. In Fig. 23 (*a*) the planer strip *a* is provided with a tongue that fits the T slots and is bolted to the planer platen, while in Fig. 23 (*b*) the planer strip is simply made a tight fit in the slot. The work *b* is put against the strip, and two pins *c*, *c* with setscrews are put in

the holes in the platen and the screws set up against the work. The screws push the work against the planer strip. While the friction will be sufficient to hold the work against a light cut, it would be pretty sure to slip under a moderately heavy one, and hence stop-pins *d*, *d* should be placed in front of the work to prevent any longitudinal movement.

32. Toe Dogs.—Thin work may be fastened to the platen by screw pins and **toe dogs.** The toe dogs used for this class of work are shown in Fig. 24. They are usually made of tool steel with one end flattened to press against the work and the other cupped to receive the end of the setscrew. The thin end may be hardened, so that its edges *a*, *a* will cut into the work and thus be kept from slipping. Some persons prefer a wedge-shaped edge, like that of a chisel, on the flattened end. For holding work that is finished on its edges, it is advisable to make the toe dogs of soft iron to prevent them from marring the work.

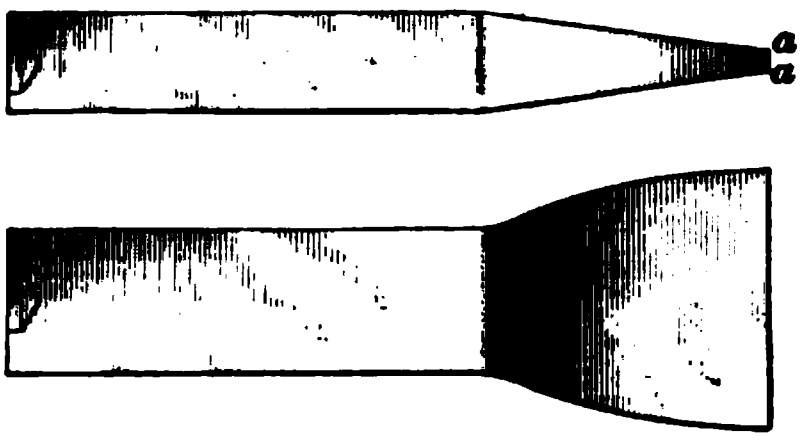

FIG. 24.

A number of pins and dogs may be put on each side of the work. It may be seen, by referring to Fig. 25 (*a*), that

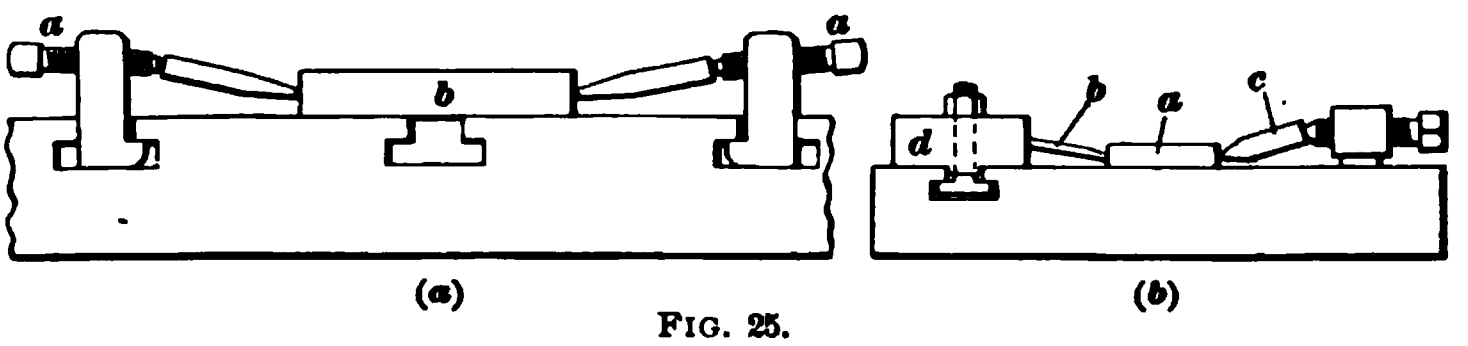

FIG. 25.

as the screws *a*, *a* are tightened, there is a tendency to push the work *b* down on the platen, thus holding it securely.

33. The slant of toe dogs must not be so great that the tightening of the setscrew will tend to turn the outer end

upwards about the edge in contact with the work. In general, the inclination of a line drawn from the point of contact to the point of the setscrew should not exceed 10°.

34. Toe dogs are sometimes applied to work held in the planer vise. They are then placed between the jaws of the vise and the work, so that the tightening of the movable jaw will press the work to the bottom of the vise. In some cases, toe dogs may be used in connection with a planer strip; being then placed on one side of the work only, they will push the work against the planed side of the planer strip and down on the platen at the same time.

35. Since toe dogs do not hold the work very tightly in the direction of the cut, it is always advisable to put stop-pins in front of the work to keep it from slipping.

A thin strip or straightedge may be used with or in place of toe dogs for holding work. Fig. 25 (*b*) shows a piece of work *a* held on a planer table by the straightedge *b* and the toe dogs *c*. The straightedge rests against a planer strip *d* or against two blocks bolted down in the same manner. The piece *b* is inclined as shown, so as to keep the work in contact with the table. A straightedge may be used in a similar manner for holding work in a planer chuck.

36. Clamping Round Work.—If a shaft is to have a keyway or spline cut along its length, it may be clamped to the table in the manner shown in Fig. 26. Here the shaft *a* is

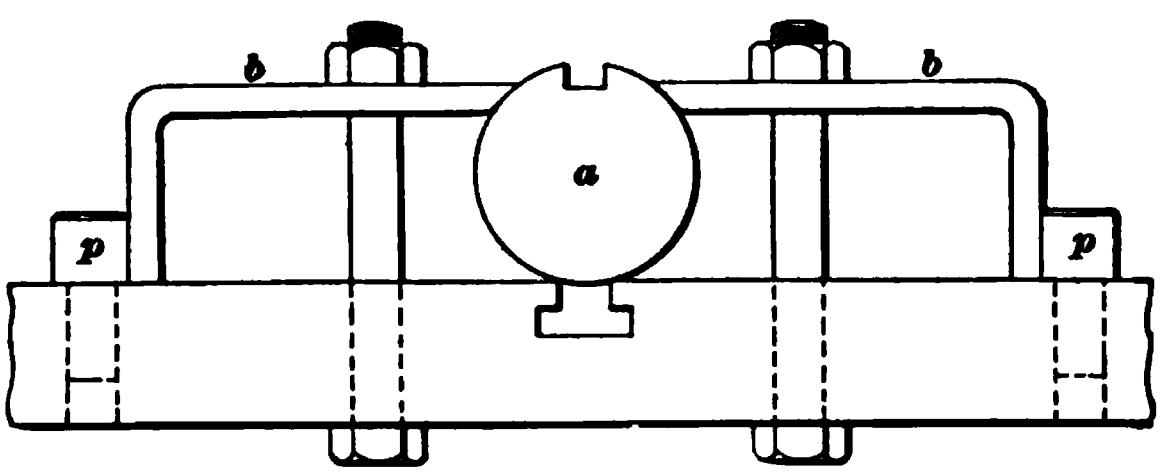

FIG. 26.

held in one of the T slots in the platen, and bent clamps *b*, *b* are applied to each side. To keep the clamps from slipping

down on the sides of the shaft, stop-pins *p*, *p* are put in the platen to hold the clamps in place. If one clamp is made much tighter than the others, there is a tendency to spring the work, especially if there are many clamps along the side. The stop-pins may be made with an enlarged cylindrical head to prevent their slipping through the platen. The shoulder at the junction of the head and shank may be beveled slightly; this allows the point of a screwdriver or pinch bar to be used for prying them out of the hole.

37. A better method of holding long shafts that are to be splined is to have a long planer strip *a* bolted to the platen, as shown in Fig. 27. This is beveled as shown so that

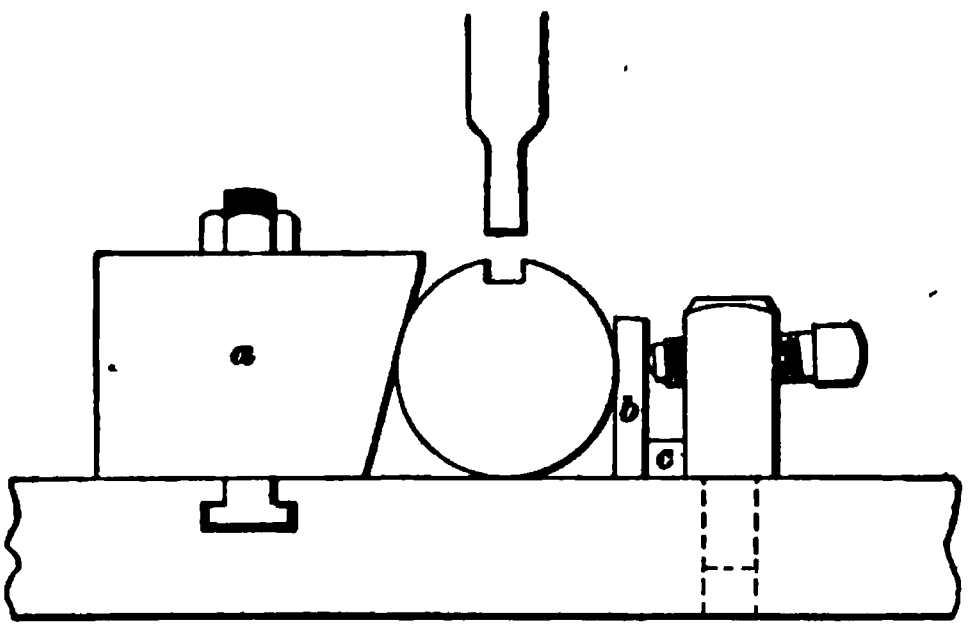

FIG. 27.

when the shaft is pressed against it by the setscrew, it is held down firmly. By this method the shaft is kept straight.

To prevent the points of the setscrews from marring the shaft, a guard piece *b* should be placed in front of each setscrew. When the point of the setscrew is much higher than the axis of the shaft, it may be necessary to put a packing-block *c* between the lower end of the pin and the guard strip. The center of the setscrew should be at least as high as the axis of the work, or slightly above it; otherwise, there will be a tendency for the shaft to rise up when the setscrews are tightened. As the pressure of the cut is considerable, a stop-pin should be placed in front of the shaft.

38. V Blocks.—If a shaft has different diameters, it may not be possible to hold it by the methods described. **V blocks** may then be used for supporting the shaft, as shown in Fig. 28. A number of these blocks are planed exactly alike, and have tongues on the bottom that fit the T slots in the platen and insure correct alinement. These blocks are put on the platen in such positions that the parts of the shaft to be supported that have equal diameters will rest in them.

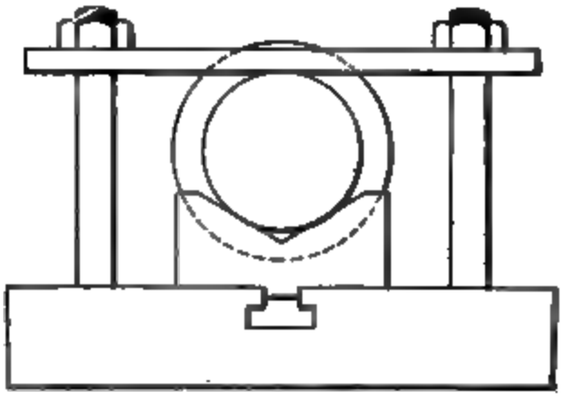

FIG. 28.

PLANER CENTERS.

39. Construction and Use.—Fig. 29 shows a set of **planer centers** used for certain classes of work. These centers are clamped to the platen; tongues on their bottom, which fit the T slots, insure that they are in line with each other and with the line of motion of the platen. The work

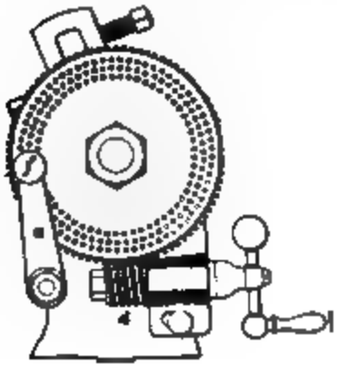

(b) (a)

FIG. 29.

is held between them in the same way that it would be held between lathe centers. A dog is fastened to the work and the tail is held in the slot in the arm *a*. Referring to Fig. 29 (*a*), a worm-wheel *b* is shown. This is rigidly fastened to the

headstock spindle; by means of a worm engaging the worm-wheel and a handle *c* fastened to the worm, the headstock spindle may be revolved by hand. The worm *d* is shown clearly in the end view given at (*b*). By examining this end view, it will be noticed that several concentric rows of holes are drilled into the worm-wheel, the holes in each row being spaced equidistant. A movable arm *e* is fastened to the frame of the headstock in such a manner that it can be rigidly clamped. This arm carries on one end a latch pin *f*, which has a small cylindrical projection that fits the holes in the worm-wheel. By means of the holes and latch pin, quite a number of equal divisions of the circle may be obtained.

40. To Find What Divisions Can Be Obtained.—To find if a given number of equal divisions can be obtained with the number of holes in the various rows, use the following rule:

Rule.—*Divide successively the number of holes in each row by the number of parts into which a circle is to be divided. If the quotient is a whole number, the proposed number of parts can be obtained. The quotient is the number of holes which the latch pin must be advanced. Never count the hole the latch pin is in when starting to make a change.*

EXAMPLE.—There being 72, 64, and 56 holes in the three rows on the worm-wheel, can a circle be divided into 14 parts?

SOLUTION.—Dividing 72 by 14, we get $5\frac{2}{14}$ as the quotient. As this is not an integral (whole) number, try the row having 64 holes. Dividing 64 by 14 we get $4\frac{8}{14}$ as the quotient. Since this is not a whole number, try the last row. Dividing 56 by 14, we get 4 as the quotient, which is a whole number. This shows that, by moving the worm-wheel 4 holes at a time in the row having 56 holes, we can obtain 14 equal divisions. Ans.

ANGLE PLATES.

41. How Angle Plates Are Used.—For some classes of work, an **angle plate,** shown at *a* in Fig. 30, is very convenient. This angle plate is planed so that the two

outer surfaces make an angle of 90° with each other. When used, one face is bolted to the platen, as shown in the illustration, and the work is bolted to the side of the angle plate.

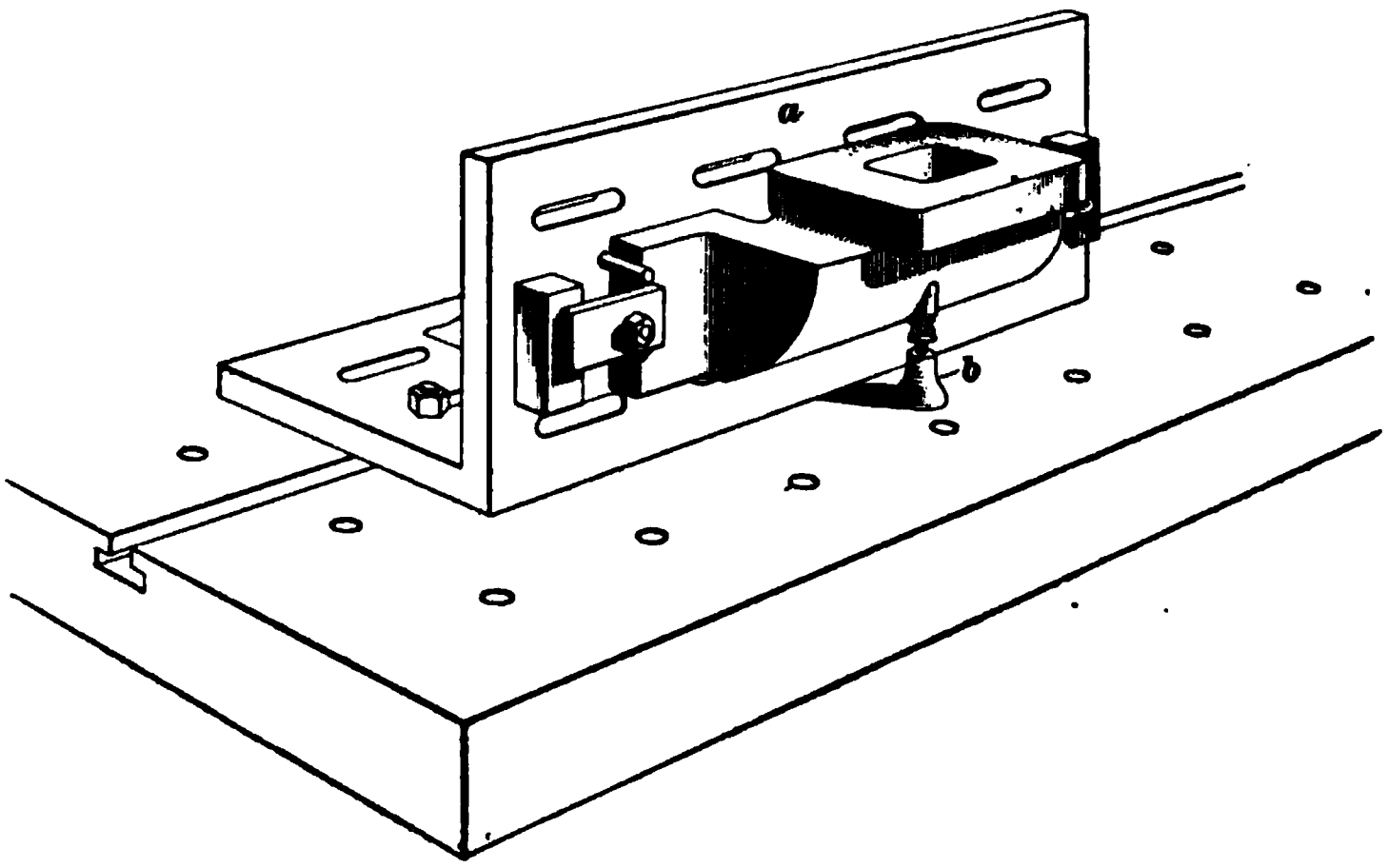

FIG. 30.

When one side of a piece of work has been finished and another side is to be finished square with it, the work is bolted with its finished surface against the angle plate by bolts and clamps, used in the same way as when fastening work to the platen.

42. The angle plate is especially adapted to work where the surface opposite the side to be finished has such a shape that it cannot be conveniently bolted directly to the platen, as occurs, for instance, in the piece shown in the figure. It will be seen that the under side is a curved surface.

43. Planer Jacks.—When the work projects a considerable distance from the angle plate, it should be supported near the free end in order to prevent it from springing away from the cut. **Planer jacks** are very convenient for this purpose; one of these is shown applied at *b* in Fig. 30.

44. One form of a planer jack is shown in Fig. 31. It consists of a base *a* tapped to receive the screw *b*,

through the head of which two holes are drilled at right angles with each other, to admit the adjusting pin shown. A cap *c* is attached to the head by a ball-and-socket joint, to allow the cap to adjust itself to any slight inclination of the surface to which it is applied. The cap may be checkered, as shown, in order to prevent it from slipping. These jacks may be made in various heights to suit conditions.

FIG. 31.

45. To Keep Work From Slipping. — Under a heavy cut there is danger, where two planed surfaces are placed together, that the work will slip. This danger may be lessened by placing a piece of paper between the surfaces before clamping.

CLAMPING BY GLUING.

46. Very thin and flat work that is to be planed all over its top surface cannot be held very readily by toe dogs. If straight clamps are put on top, they must be shifted after part of the surface has been planed. In many cases, however, such work may be held without any clamps at all by a method that for want of a better name may be called **gluing.** The edges of the work, and the platen right around the edges of the work, are carefully cleaned and made fairly bright with coarse emery cloth. Melted rosin is then applied around the edges; this, if the surfaces to which it is applied are absolutely free from grease, will stick surprisingly well to them, and will offer enough resistance to hold the work securely against a light cut. Melted shellac, sealing wax, or pitch may be used instead of the rosin; the rosin is usually easier to obtain and is cheaper. This method of fastening obviates any danger of springing the work in clamping.

SPRING OF THE WORK IN CLAMPING.

47. Flat Bearings.—So far it has been assumed that the face of the work is true, so that it has a large flat surface bearing against the jaw of the chuck or on the planer platen. Such, however, is seldom the case. When the casting or forging is first put on the platen, it rarely touches in more than three points, and when the rough piece is correctly set for the cut, probably not more than one point actually touches the platen, the other points being supported by packing or blocking.

48. Packing Under the Work.—When a clamp is used, there should be a support under the work at that point to prevent springing it. Suppose the piece shown in Fig. 32 is to be clamped to the platen. The piece is crooked on the bottom, so that it touches only at the points *a* and *b*. If clamps be applied at the ends of the work and then tightened, the work will spring down at the ends, bending around its points of support *a* and *b*. If a cut is taken over the

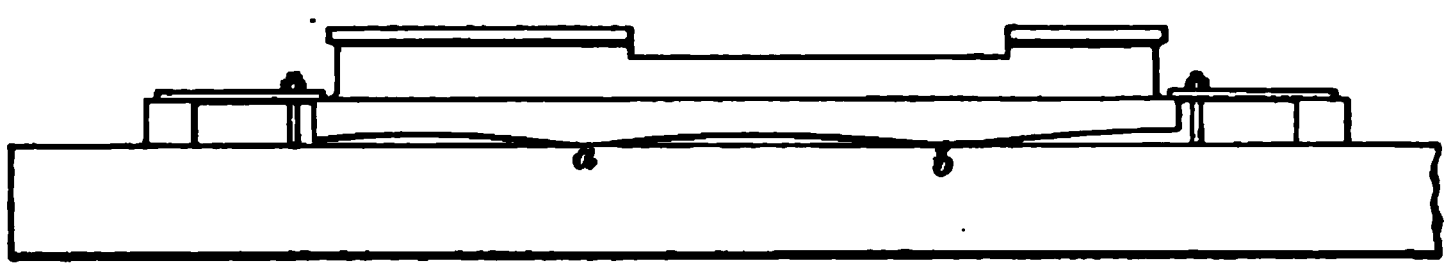

FIG. 32.

work while it is thus sprung, it will be found upon releasing the clamps that it will spring back nearly to its original shape, and, hence, the planed part will no longer be straight. When clamping work that does not touch the platen directly under the clamp, a blocking piece or packing piece should be put under the work at that point, so that when the clamp is tightened, the end cannot spring down. Paper or sheet iron is often used for packing. In many cases, a thin iron or copper wedge is found convenient for packing up and also for setting the work.

CARE IN SETTING THE WORK.

49. Position on the Bed.—When a large piece is to be planed or finished on a number of surfaces, it should be so set that all the surfaces can be finished in their proper relation to each other. The work should be laid out by drawing lines on the various surfaces to indicate the amount of metal that is to be removed. The work is then set to these lines so that all the surfaces can readily be worked upon.

Suppose a lathe bed is to be planed. In this case, the top and bottom parts should be planed parallel. It may be found that the bed is considerably warped and twisted After the bed is put on the planer, it is leveled up by the use of shims, or wedges, under the ends and sides until it has a fair bearing. For testing the top face of the bed, or the face about to be planed, the surface gauge may be used at the end and along the sides to see that the work averages the same height. When the work is adjusted with the wedges and packing so that the top face appears about level, the clamps are applied, care being taken that they are over the packing pieces.

50. Resetting.—If a piece has been planed true and is turned over on the platen, it may be found that it does not remain true but is slightly warped, so that there is a slight amount of rocking motion when the work rests on the platen. In such cases, the piece should be supported on thin pieces of paper at the four corners. It will be found by pulling the pieces of paper that two are tight and two are loose. More paper should be put under the loose corners until the papers at the four corners are all pinched with the same pressure. When care is used, it is possible to give a very even bearing.

51. Use of a Level.—When a surface that has been removed from the platen after planing is to be set again, it may be set level and tested by the use of the surface gauge. The work is often of such shape that the surface gauge

cannot be used. In such cases, a spirit level may be employed. When the level is used for setting work, the platen should first be tested with it to see that the platen itself is level. Planers should be set so that the platen is level in the direction of its length and width. If the platen is set level, the work may be set by the use of the level.

When the level is not at hand, or cannot be used, a tool may be clamped in the head and adjusted so as to almost touch the work at one corner. The work can then be moved under the tool by moving the machine, preferably by hand, and if there is any unevenness in height, it will be apparent.

SPECIAL JIGS FOR HOLDING WORK.

52. When there are a number of pieces to be finished, it is generally preferable to make a **special jig** for holding the work. By doing this, much time may be saved. In devising special jigs for holding work, the aim should be to hold the work securely and accurately, and at the same time to have the jig so simple that the work may be changed quickly and easily.

53. Planing a Number of Pieces at Once.—Much time can often be saved by setting a number of pieces on the platen so that they will all be planed at the same time. This is especially true when much time is required to adjust the tool to the cut. After it is adjusted to one piece of work, the tool runs the whole length of the table, cutting each piece of work to the desired shape.

Fig. 33 shows very clearly how a number of pieces may be set on the platen at the same time and a number of cuts taken over all of them. In this case, eleven pump frames with cylinders cast on their ends are so arranged that they may all be planed at the same time. Each casting is carefully set and clamped in place, care being taken in setting that the space between them is as small as possible. The planer used has four heads. The two heads on the cross-rail

work on the top of the cylinders, planing the valve seats and the joint for the steam and water chests. On either side, a head is used for squaring down the end for the cylinder heads. All the feeds in this case are automatic.

FIG. 33.

54. Special Jacks or Braces for High Work.—Fig. 34 shows two large pillow-blocks for a steam engine supported on the planer while a cut is being taken off their bottom faces. The pieces, being quite high and having narrow bases, have a tendency to tip when a heavy cut is being taken. To avoid this, after the work is set, the **special planer jacks** shown at *a* are employed. This particular form of jack is very convenient for this and similar classes of work. By placing the end *b* of the jack *a* in one of the holes in the planer platen and swinging the other end *c* into some angle of the casting, then by turning the nut *d* the jaw *c* is forced out against the casting. By placing two jacks under the end of a large casting in the

manner shown in Fig. 34, a combined supporting and bracing action is obtained from the jacks.

FIG. 34.

Fig. 35 shows two views of the special planer jack used for high work as shown at *a* of Fig. 34.

The piece *a* is a plain yoke with a pin on one end, the piece *c* is an eye with a pin on one end the same size as the one on *a*, and the piece *b* is a bolt that fastens *a* and *c* together, allowing them to swing freely.

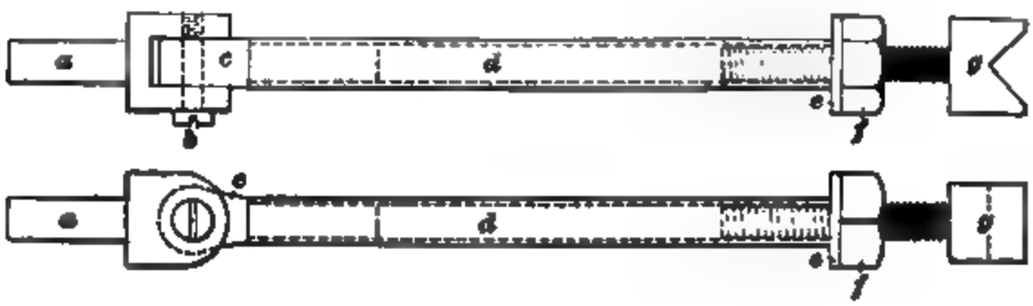

FIG. 35.

The jaw *g* is made V-shaped and has a screw-thread shank 8 inches to 12 inches in length. The nut *f* is screwed on

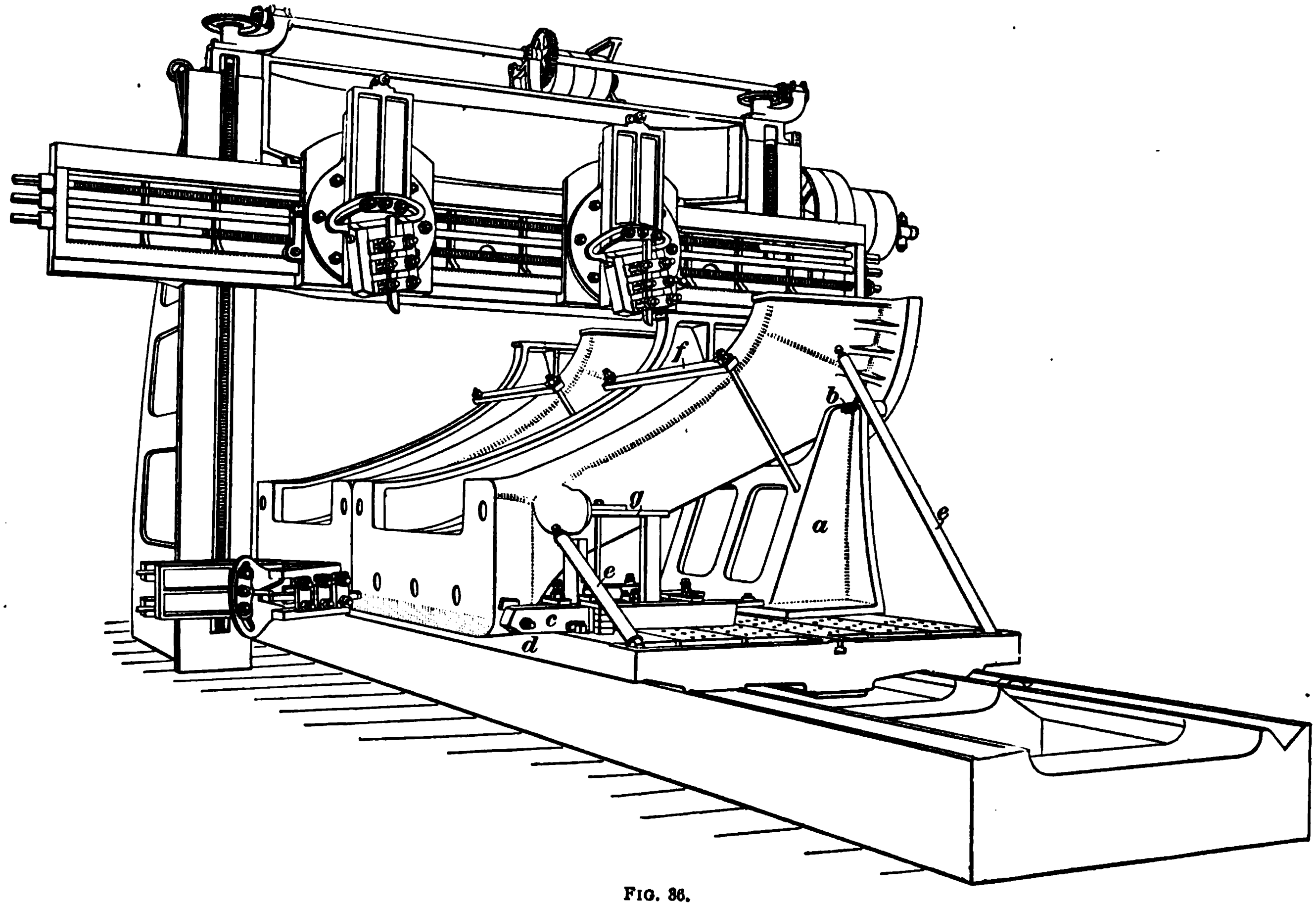

FIG. 36.

the shank of *g* and a washer *c* is sometimes used next the nut for the nut to turn against. The piece *d* is simply a piece of gas pipe and may be of any desired length. The pieces *a*, *b*, and *c* are picked up and the pin on either *a* or *c* put into a hole in the planer platen. Then the gas pipe is put on the other pin and the screw *g* is slipped into the other end of the gas pipe. The whole jack is then turned to the desired position and tightened by the nut *f* until the work is properly supported.

55. Example of Clamping Heavy Work.—Fig. 36 shows a piece of work that, because of its peculiar shape and great weight, is difficult to hold on the platen without some special device. The two pieces shown are the two parts of the frame that supports the cylinder of a vertical engine. A yoke *a* is here used to support the upper ends of the frames. This yoke is bolted to the platen and the end of the casting rests in it. The flange on the casting keeps it from slipping down, while setscrews *b* at the side of the yoke are used for adjusting the work. The lower end of the casting overhangs the table. It is kept from slipping along the platen, when a cut is being taken, by the use of a heavy bar *c*, which is bolted to the platen. A setscrew *d* in the end of the bar is used to make slight adjustments when setting the work true. Planer jacks *e*, *e* are also used to keep the work from slipping and tipping. The clamps for holding the work down are shown at *f* and *g*. When such heavy work as this is securely braced and rests fairly on a special fixture or special holding device, its weight helps to hold it down, so that very heavy clamps are not necessary.

PLANER WORK.

(PART 2.)

PLANER TOOLS.

1. Cutting Principle.—In the case of **planer tools** the principles underlying the cutting operations do not differ materially from those of lathe tools, with the exception of the fact that planer tools always work on a flat surface and hence the angle of front rake or clearance cannot be varied by changing the position of the tool. The shape of planer tools varies somewhat and is determined by the kind of metal to be cut, the hardness of the metal, and whether the cut being taken is a roughing or finishing cut.

2. Angles of Rake and Clearance.—A common form of forged planer tool is shown in Fig. 1 (*a*) and (*b*). If through the point *o* of the tool a line *a b* be drawn perpendicular to the surface of the work and a line *c d* parallel to the surface of the work, the angle *d o f* will be the **angle of clearance,** or **front rake.** In this case the line *a b* coincides with the top face of the tool, hence the tool has no top front rake. In Fig. 1 (*b*) the bottom of the tool is shown. The line *g h* is drawn at right angles to the line of motion of the planer platen, and the line *k i* is drawn along the front face of the tool. The angle *h v i* is the **angle of side rake.** It will be seen that the angle of front rake cannot be varied. The angle of side rake, also, depends on the grinding of the tool and in most forms of tools cannot be varied, by setting. Hence the planer tool always has a constant angle of clearance and a constant angle of keenness that cannot be

For notice of copyright, see page immediately following the title page.

varied by changing the position of the tool in relation to the work. In the case of some tools having a curved cutting edge, it is possible to vary the angle of side rake slightly by changing the position of the tool. The position of the planer tool relative to the work corresponds to that of a lathe tool when the point is set level with the center. Tools for planer work are forged with from three to five degrees of clearance.

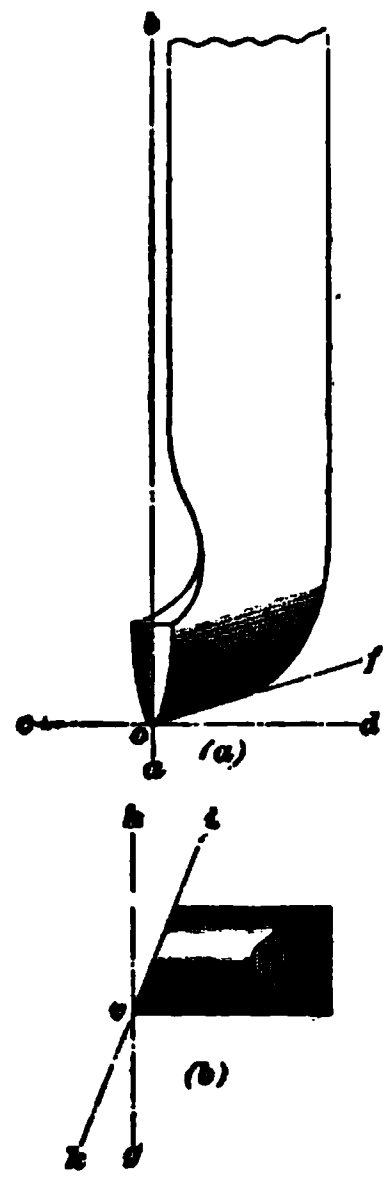

FIG. 1.

The keenness of a planer tool depends largely on the angles of top front rake and top side rake. The strength of a planer tool depends on its angle of clearance and the angle of top rake.

3. Forged Roughing Tools.—Ordinarily **roughing tools** for planer work are of the form shown in Fig. 1, though for heavy roughing a tool of the form shown in Fig. 2 is frequently employed. In this tool it will be noticed that the cutting edge has been formed by upsetting the end of the tool so as to bring the cutting edge above the upper surface of the shank of the tool and the metal has not been cut away or reduced back of the cutting edge, as in the tool shown in Fig. 1; this results in a very much stiffer tool. The amount of rake, or clearance, given to these tools depends on the hardness of the metal to be cut and also, to some extent, on the depth of the cut. In the tool shown in Fig. 2, the cutting is done entirely along the edge *A B*, while the back edge *C D* coincides very nearly with the shank. This form of tool will turn a chip up and away from the surface of the work; it will also produce a nearly flat chip, which is easier to bend

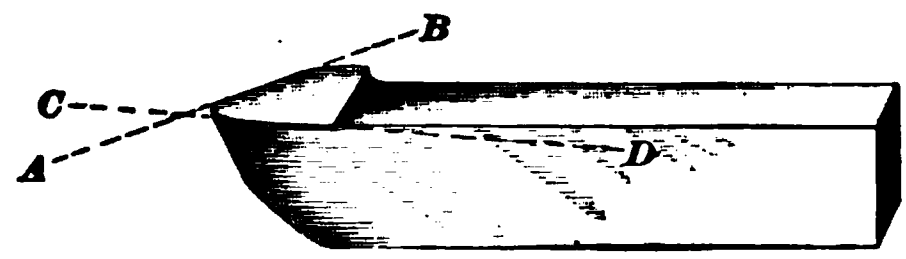

FIG. 2.

than a curved chip. The objections to the form of tool shown in Fig 1 are that the surface being cut is a curve and hence the chip will not roll away from the tool as freely and also the stock back of the cutting edge is so reduced that the tool loses much of its stiffness.

4. For very heavy roughing work a form of tool known as the **clam-shell tool** is frequently used. This is shown in Fig. 3. It will be seen that the cutting edge of this tool is very much like that of the tool shown in Fig. 1 (*a*). The cutting is done along the outer curved edge. The tool is forged like an ordinary straight-side tool and is then bent to the desired curve. The principal advantage that this tool possesses is that it requires less work in grinding, owing to the fact that there is a smaller surface of metal to be ground away on the upper face of the tool to produce a sharp cutting edge; also it is easier to draw the cutting edge above the face of the tool than it is to upset the whole end of the tool, as in the case of the form shown in Fig. 2. The cutting edge may be made practically straight, as in the tool shown in Fig. 2.

FIG. 3.

5. Forged Finishing Tools.—For finishing cuts on cast iron, a broad square-nosed tool of the form shown in Fig. 4 is used for surfacing; this tool is given a little top front rake. For finishing wrought iron and steel, a similar tool having a much narrower point is frequently used. Sometimes for finishing wrought iron or steel a tool similar to that shown in Fig. 1 is used, in which case the curve at *o* is made much flatter and at times the point of the tool is ground perfectly flat for one-eighth inch or so, blending into a curve at each side.

FIG. 4.

6. For finishing side cuts, the **side tool** is employed; one for heavy work is shown in Fig. 5 (*a*). The tool is forged thin along its cutting edge *A B* and tapers so

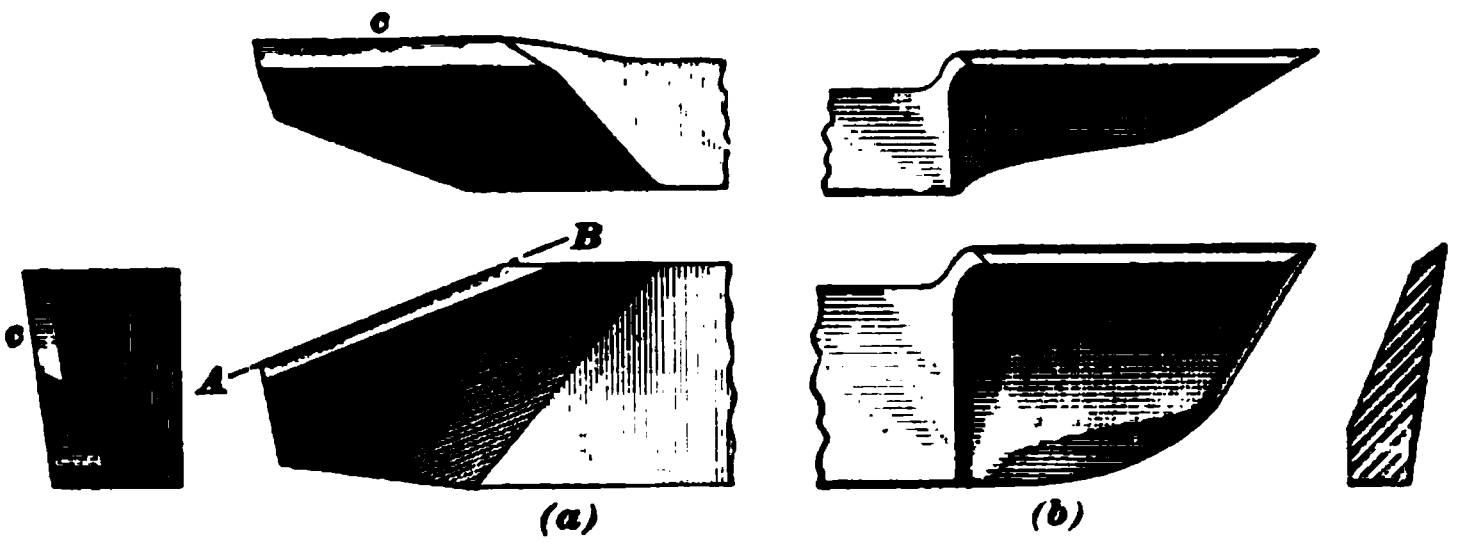

FIG. 5.

that it is thick at the back, to give it strength; the cutting face *c* is ground thin and is given enough clearance so that the tool can be made to cut along its entire edge. The cutting edge *A B* slopes back from the shank of the tool so as to give a shearing cut; this is advantageous on account of the fact that it gives less shock when entering or leaving the cut, as the cutting starts near the corner *B* and the force necessary to move the tool gradually increases until a full cut is being taken. At the end of the stroke the tool gradually runs out of the cut with the same ease. Another advantage of the sloping edge is that the shearing action of the cut tends to push the work down on the platen and thus reduce the liability of the work from slipping.

Sometimes it is necessary to finish a side cut up to a shoulder, in which case a tool of the form shown in Fig. 5 (*a*) cannot be used, owing to the form of the cutting edge *A B*. For such work, a tool of the form shown in Fig. 5 (*b*) is employed, in which case the cutting edge is parallel to the shank of the tool and the general form of the tool is very similar to the side tool used in lathe work, keenness being gained entirely by front and top rake.

7. Tool holders, of which many forms are used in planer work, are especially serviceable on account of the fact that the inserted blades used in them require a much

smaller amount of steel than would be necessary if the entire tool were of the forged type. Self-hardening steel gives excellent results on planer work, especially for roughing cuts, and self-hardening steel tools are very largely used in the tool holders. Any tool holder intended for use in the planer should have a very stiff shank and should be so arranged as to hold the cutter, or blade, firmly and support it close to the cutting edge. A common form is shown in Fig. 6. With this style of holder the blade may be set in line with the shank for flat surfaces, or it may be turned to either side for right-hand or left-hand cutting. In some cases it is well to reverse the tool so that the shank travels in advance of the blade; this is done to avoid the danger of the tool's springing into the work, or chattering, which is liable to occur when the cutting edge is far in advance of the point of support or when cutting a broad surface. This matter will be taken up more fully under the heading, "Spring of Planer Tools."

FIG. 6.

8. Gang Planer Tools.—Where only a single planer tool is used, it is sometimes impossible to increase the feed greatly without bringing an excessive strain upon the tool and planer head; besides, an excessive feed results in a rough surface and in badly breaking off the edge of the work where the cut runs out. It is mainly to increase the capacity of planers that multiple-head planers have been brought out, and in large work it is no uncommon thing to see two tools in heads upon the cross-rail and one tool on each housing operating on the casting at the same time. Many pieces of work are of such a form

FIG. 7.

that it is impossible to get two heads over them at the same time and yet it would be advantageous if a heavier feed could be used. To meet these requirements, the **gang planer tool,** one form of which is shown in Fig. 7, has been brought out. This consists of an ordinary shank *a* to which an adjustable head *b* is attached. This head is pivoted on a pin opposite the center of the shank *a* and can be adjusted by means of clamp screws *c* so that the cutting edges *d* of the tools stand only slightly in advance of each other, or so that each tool will take a considerable cut. The tools *e* are all ground to a gauge and are brought into their proper position in the head by clamping the shank *a* in the tool block and allowing the points of the tools *e* to rest upon the platen, after which they are secured in place by the setscrews *f*. The resistance offered by a cut varies, probably, at least as the square of the thickness of the chip, and as a consequence a cut giving a chip $\frac{1}{4}$ inch thick would, theoretically, offer sixteen times the resistance offered by a chip $\frac{1}{16}$ inch thick. From this it will be seen that by using the multiple-tool head it is possible to take heavy roughing cuts, using an apparently very coarse feed, and at the same time have the chips cut thin by the individual tools. Fig. 8 shows the way in which the four tools of the gang divide up the cut between them.

FIG. 8.

9. Spring of Planer Tools.—Owing to the fact that the cutting edge of a planer tool is usually in advance of the point of support, there is more or less of a tendency for the tool to spring into the work. This is well illustrated in Fig. 9, where the tool bends about the point *a*, the point of the tool following the arc *A B*. It will be noticed that this arc cuts deeply into the work. In the form of tool shown, the cutting edge is considerably in advance of the point of support, hence the tendency to spring in is very great; but this tendency becomes less as the cutting edge is brought more nearly beneath the point of support. If the cutting

edge is carried back of the point of support, the tool will have a tendency to spring away from, or out of, the work; when in this position it is called an **underhung tool.** Such

FIG. 9

a tool is shown in Fig. 10, where, however, it is only carried back of a plane passing through the point *a*. If the tool

FIG. 10.

head is loose on the cross-rail or there is any spring in the cross-rail, the whole tool head may tend to rotate about the point *b*, in which case the tool will swing into the work along

the arc EF; if the head is perfectly rigid, the point of the tool will move along the arc AB, and hence will not tend to enter deeper into the work. Sometimes, in order to still further reduce the tendency of the tool to enter the work, the edge is carried well back, or underhung, as shown in Fig. 11. In this case rotation about the points a or c would

FIG. 11.

carry the point of the tool along the arcs AB and CD, both of which would tend to lift it out of the work. Also rotation about the point b would only tend to carry the point of the tool into the work very slightly. Of course the point b cannot be determined definitely, as can the points a and c, and depends on the style of the cross-rail and the fit of the head upon it, but in a good stiff planer there should be little or no tendency to motion from this cause.

10. Special Forms of Finishing Tools.—Broad-nosed or special **finishing tools,** if forged from solid stock, are very expensive. On this account various forms of special tools, in which the cutting edges are formed on small pieces of steel bolted or clamped to a holder, are often used. Fig. 12 shows three tools of this class. The one shown at Fig. 12 (a) is intended for finishing very broad surfaces. The steel tool a is clamped to the shank d by two capscrews.

The cutting is done by the edge *bc*. The tool shown at Fig. 12 (*b*) is intended for finishing a narrower flat surface, having a square corner. The cutting is done along the edge *bc* and the steel tool *a* is made square with the four cutting edges, so that any one of them can be brought into the position *bc*. The tool shown at Fig. 12 (*c*) is intended for finishing a fillet of large radius. The cutter *a* is circular in

(a) (b) (c)

FIG. 12.

form, the cutting being done along the edge *bc*. The cutter *a* can be rotated on the clamping bolt and clamped in any desired position, so that all parts of the edge can be used before sharpening. All these special tools are underhung, that is, the steel tool proper is clamped to the back side of the shank. Cutters or blades having an irregular outline may also be used on shanks similar to those shown in Fig. 12.

PLANER OPERATIONS.

TAKING A CUT.

PLANE SURFACING.

11. Clamping the Tool.—When taking a cut over a plane surface, the tool should be rigidly clamped to the tool block, so that the cutting edge projects as little beyond the tool block as is necessary to insure rigidity of the work. The cross-rail should be adjusted as close to the work as practicable, and should be clamped rigidly to the housings.

The tool is adjusted by means of the down-feed handle so that it will take the desired depth of cut. Care should be taken to see that all parts of the planer are so adjusted that there is no lost motion. The screws in the gibs of the down-feed slide should be tightened so that the head can be fed up and down with no shake or lost motion, and the gibs fitting the cross-rail of the planer should also be tightened so that the planer head can be fed along the crosshead freely, but without any lost motion. Usually at the beginning of a cut the tool is fed to the work by operating the feed-screw by hand. After the cut is started the automatic feed is thrown in.

12. Action of the Feed-Motion.—The feed-motion is operated by the rack *u*, Fig. 13, at the side of the housing, which is connected with the feed-disk at its lower end by a connecting-rod. This connecting-rod is pivoted to a block that slides in a slot cut in the disk; the block is operated by a screw handle. For each stroke of the planer, the disk makes a partial turn, and the rack will be alternately moved up and down. When the block in the disk is moved to the end of the slot, the rack will have its greatest travel. As the block is moved toward the center of the disk, the amount of throw decreases until the block reaches the center, where it is zero. The amount of throw and the movement of the rack determine the rate of feed.

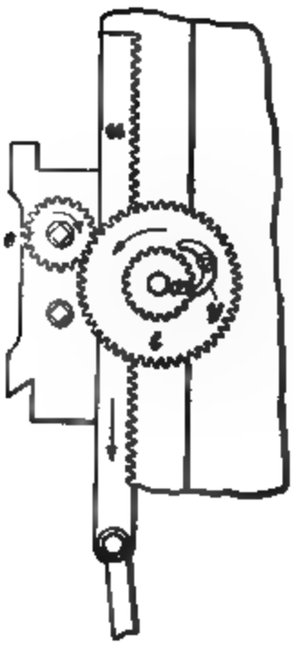

Fig. 13.

13. Details of Feed-Motion.—A top and side view of the feed-motion at the end of the cross-rail of the planer are shown in Fig. 13. The teeth of the rack *u* engage the teeth of the gear *v*. The gear *v* is attached to the shaft *w*, which is free to turn in its bearing and carries the gear *t* and ratchet wheel *x*. The gear *t* is

loose on the shaft *w*, while the ratchet *x* is keyed fast to the shaft. On the outside of the gear *t* is a pawl *y* that engages the ratchet wheel *x*. The gear *t* meshes with the gear *s* on the feed-screw. When the rack is moved down in the direction of the arrow the gear *v* revolves, carrying with it the ratchet wheel *x*. When the pawl *y* is engaged, the ratchet wheel *t* is rotated in the direction of the arrow, thus turning the gear *s*, and with it the feed-screw. When the rack *u* moves up again, it turns the gear *v* back, but the pawl *y* slips over the ratchet wheel; consequently, the feed-screw remains at rest. With each stroke of the machine a similar movement occurs. To reverse the direction of the feed, the pawl *y* is moved so that its opposite end engages the ratchet wheel *x*. The feed may be stopped entirely by setting the pawl *y* in mid-position, so that neither end engages the ratchet wheel.

14. Depth of Cut.—In planer work, as in lathe work, roughing and finishing cuts are taken. The first cuts are made deep, and the feed is consequently fine when compared with the finishing cut. It should, however, be as heavy as the tool will stand without heating, and as great as the machine will drive without danger of springing or bending the work.

15. Feeds for Roughing and Finishing Cuts. The amount of feed that can be taken under different conditions depends largely on the metal being cut and the kind of cut being taken. The resistance that a chip offers to a tool as it is cut from the solid and turned past the tool depends on the thickness of the chip more than on its width, and also on the character of the metal. In planing some metals, such as cast iron, a very heavy feed cannot be used, in some cases, on account of the fact that the great resistance offered by the thick chip causes the metal to break out in advance of the point of the tool, thus causing pits or indentations in the surface of the work being planed. If

the thickness of the chip can be reduced without reducing the feed, a greater surface can be covered in less time; this is illustrated in Fig. 14. If a tool were set with its cutting edge perpendicular to the work, so that it would cut out the block *a c d b*, it would have a feed equal to *a b*, and would have to turn a chip whose thickness is also equal to *a b*. The depth of the cut in this case is *a c*. If the same tool were arranged with its cutting edge at an angle of 45°, as shown in Fig. 14 (*b*), and given a feed *a b* equal to that shown in

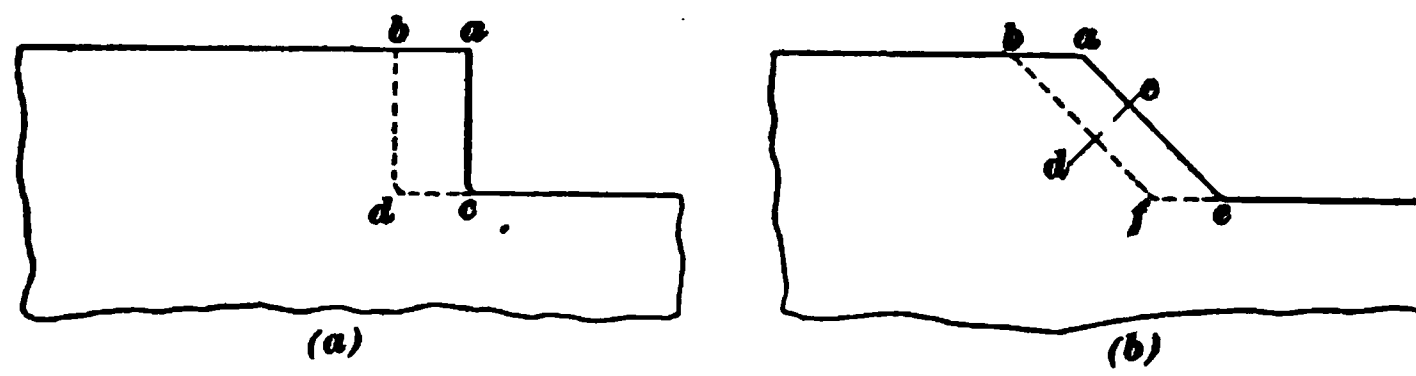

FIG. 14.

Fig. 14 (*a*), the chip would have a thickness shown along the line *c d*, which would only be about three-fourths of the feed as shown by the line *a b*. The breadth of chip, however, would be equal to *a e*. According to a principle in geometry, if the feed of *a b* remains constant and the depth of the cut is the same, the area of the chip *a b d c*, Fig. 14 (*a*), or *a b f e*, Fig. 14 (*b*), will remain the same, and hence the amount of metal removed in each cut will be the same; but owing to the fact that the thickness has been reduced one-fourth, the resistance offered to the tool will be very greatly reduced. On this account, the cutting edge of planer tools intended for roughing work are usually set at an angle to the surface to be cut, as shown by the line *A B*, Fig. 2. From this it will be seen that the feed which can be given to a roughing tool depends to a large extent on the angle that the cutting edge forms with the surface of the work.

Finishing cuts should always be light, and the feed that can be given depends on the character of the metal being cut. In finishing wrought iron and steel, it is necessary to

use comparatively narrow finishing tools with a correspondingly fine feed. In finishing cast iron, very broad finishing tools may be used, and a feed nearly equal to the width of the tool.

16. Chipping the Edge of the Work.—When taking a roughing cut, there is a tendency for the tool to break off the edge of the work just as the tool is leaving it. This breaking of the edge often runs much below the finished surface, and leaves a bad-looking piece of work. It may be avoided by beveling the edge of the work, as shown at *b*, in Fig. 15. The bevel starts at the line that indicates the depth of cut and runs back at an angle of about 45°. When the tool comes to the beveled edge, the force of the cut begins to decrease, so that by the time the edge of the work is reached, there is little of it to break.

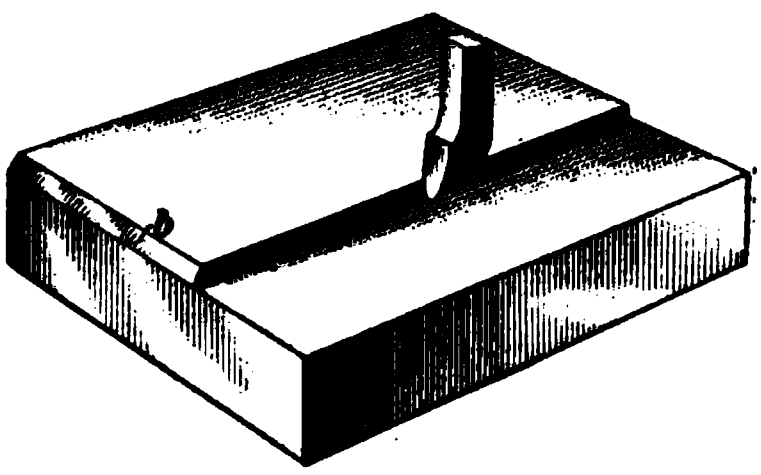

FIG. 15.

SIDE CUTS OR DOWN CUTS.

17. Setting the Tool.—The sides of the casting may be finished by feeding a properly shaped tool down over the sides of the work. In Fig. 16 a casting is shown fastened to the platen of the planer. The upper surface *a* has been finished in the ordinary manner and it is desired to finish the sides *c* and *b* square with the finished face *a*; a tool of the form shown at *t* may be used for this purpose. It should be set in the tool block so that its edge extends far enough beyond the tool clamps to pass entirely over the surface to be planed before the tool block comes in contact with the work. On account of the fact that the cutting edge of the tool extends so far beyond the tool block, it is impossible to take as heavy cuts in facing down as it is when working on a flat surface.

When taking a side cut, it is necessary to swing the tool block to one side, as shown in Fig. 16. The tool blocks and clamps are pivoted on a pin placed at the center of that circle of which the arc containing the bolts *e* forms a part. By loosening these bolts, the head may be swung to the desired

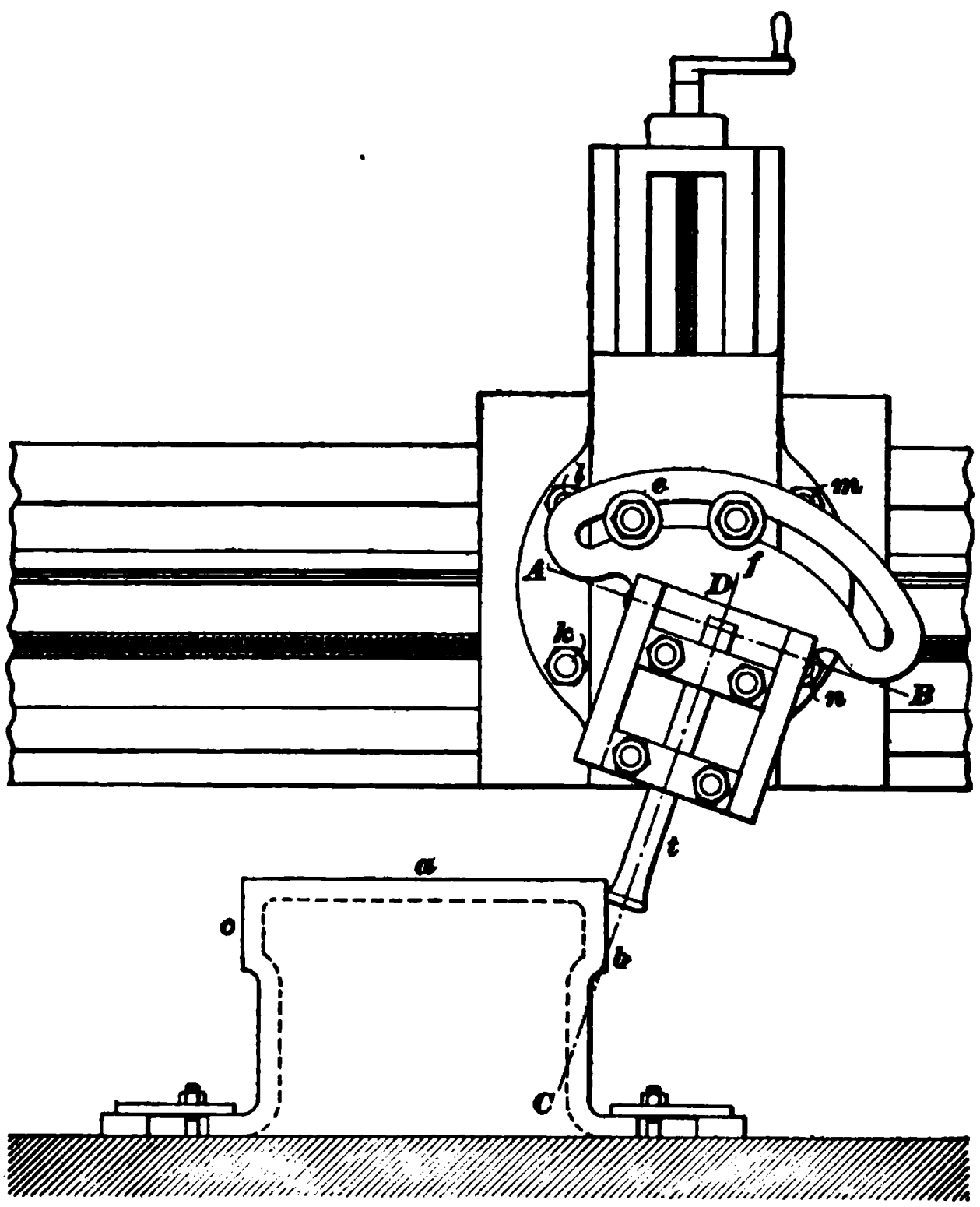

FIG. 16.

angle. When the pressure of the cut is released and the tool is on the back stroke, it is free to swing along the arc *A B*, as shown in Fig. 17. As the work passes back under the tool, the point of the tool tends to swing away from the work when planing flat surfaces.

When cutting a side face, the tool tends to rise the same as when cutting horizontal surfaces; but if the swing of the point of the tool and the face of the work are in the same vertical plane, the tool point will rub against the face of the work instead of swinging away from it. It is for this reason that the head is swung into the position shown in Fig. 16. As the tool must always swing in a plane perpendicular to the pin *w*, Fig. 17, it is evident that as the work goes back under the tool, the point will swing away from the work. In Fig. 16 the center line of the pin is represented by the line *A B*, and the center line of the tool by the line *C D*.

FIG. 17.

When planing a surface on the opposite side of the work, as in *c*, Fig. 16, the tool head and tool block must be swung in the direction opposite to that shown in Fig. 16. A handy rule to remember is that *when taking any side cut, the top of the tool block must be swung away from the surface to be cut.*

18. Testing the Squareness of the Head.—When making down cuts that are intended to be square with the top face of the platen, the down-feed slide of the head should be examined to see that it is perpendicular with the platen. This slide, or head, is on a swiveled base clamped to the saddle. It can usually be swung around to make any angle with a position perpendicular to the platen. The base is graduated, so that when set perpendicular, two zero marks come together. If the head is not set perpendicular, it may be

loosened by unclamping the four nuts *k*, *l*, *m*, and *n*, Fig. 16; it is then adjusted to the correct position and clamped again. The squareness of the head and the accuracy of the work are assured by proceeding in the following manner: A finishing cut is taken over the surface *a*, Fig. 16, and a side tool substituted and a finishing cut taken down the face or side *b*. A try square is applied to the two finished surfaces, and if *b* is not square with *a*, the vertical slide is adjusted and trial cuts made until *b* is made square with *a*.

CUTTING BEVELS.

19. Swinging the Head.—When a beveled cut, that is, a cut at any other angle to the surface of the platen than

FIG. 18.

90°, is to be made, the head is swung around so that the line of down feed makes the desired angle with the table. Suppose it is desired to bevel a piece at an angle of 60° with

the top of the platen. Then the head is moved through 30°, as shown in Fig. 18, when the tool will be fed down at 60°. The graduations are not the same on all planers. On this account, care must be taken to be sure that the proper angle with the surface of the platen is obtained.

When cutting bevels, the tool block must be swung around as shown in Fig. 18. A very easy rule to remember as to which way to swing the tool block when making side cuts or undercuts is the following: *Always swing the top of the tool block away from the surface to be planed.*

In making down cuts, especially in roughing cuts, the tool should invariably be fed downwards while cutting, but never upwards. On a fine finishing cut, this is not so essential. The objection to feeding upwards is that during the return motion the tool is liable to catch in the work before it has time to swing clear.

20. Planer-Head Graduations.—Planer heads are graduated in degrees from zero to 90; that is, a quarter of

(a) (b) (c)

FIG. 19.

a circle is divided into 90 equal parts, which are laid off as shown at *g*, Fig. 19. On some planers, the graduations are numbered from zero to 90°, zero being at the side, Fig. 19 (*b*);

in other cases, the graduations are numbered from 90 to zero, Fig. 19 (*c*). In order to set the planer head *e*, Fig. 19, to feed down at any given angle, it is necessary to know either the horizontal angle *c* or the vertical angle *e*, Fig. 20 (*a*). If the horizontal angle *c* is 35° and the graduations are as shown in Fig. 19 (*b*), the head must be set to 90° — 35°, or 55°. If the graduations are as shown at Fig. 19 (*c*), the head will be set to 35°. If the loose side, or gib, *d*, Fig. 20 (*a*),

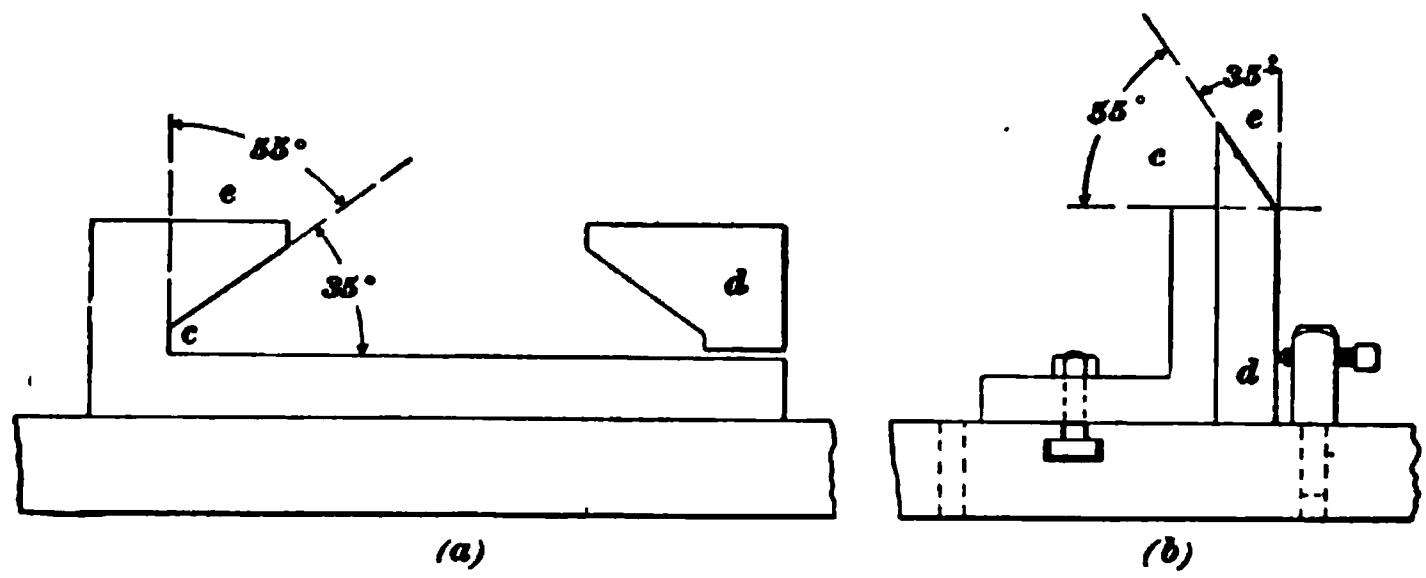

FIG. 20.

is to be planed, it is usually set on edge against an angle plate or block, as shown in Fig. 20 (*b*); when so set the angles are reversed and it will be necessary to set the planer head just the opposite from the way in which it should be set for planing the angles shown in Fig. 20 (*a*). For instance, if the graduation on the planer head were such that in order to plane the angle *c* it would be necessary to set the planer head to the 55° graduation mark when the piece *a* was set flat on its face, it would be necessary to set the head to 35° to plane the piece *d* when it was set as shown at Fig. 20 (*b*).

UNDERCUTS.

21. Spring of the Tool.—When making undercuts, or when cutting T slots, the results of the springing of the tool are reversed. In Fig. 9 it was shown that when the tool bent, it sprung down into the work, the top of which

is represented by the line *w k*. If this line is assumed to represent the under surface of a piece of work, it will be seen that during a cut when the tool springs down in the arc *A B*, it will spring away from the work, and on the return stroke the tool block will lift and swing the point of the tool in the arc *C D*, thus throwing the tool into the work and causing it to catch and lift the work off the table, or break the tool.

22. Blocking the Tool.—When an ordinary bent tool is used for undercutting, the tool must be blocked so that it will not spring back on the return stroke. This may be accomplished by having the shank of the tool long enough so that a block may be driven between it and the head; this will keep the point from rising.

23. Cutting T Slots.—When cutting T slots, a tool made as shown in Fig. 21 may be used; the tool must then be blocked in some convenient way to prevent its rising during the backward stroke. Instead of blocking the tool, it is better to make the stroke of the planer long enough so that the tool will pass some distance out of the slot at each end. When the machine is on the return stroke, the tool may be held up by swinging the tool block upwards to allow the tool to pass over the work; the tool being dropped again at the beginning of the next stroke.

FIG. 21.

A simple device to take the place of the hand for holding the tool up is shown in Fig 22. Two pieces of sheet metal are hinged together at *a*; one piece is fastened to the tool and the other piece *b* is left free to swing. When a cut

is being taken, the loose end *b* drags on the work, as shown in Fig. 22 (*a*). As soon as the tool and the hinged part *b* pass by the work, the part *b* drops down. On the return stroke, it strikes the end of the work and lifts the tool up, as shown in Fig. 22 (*b*), so that it drags over the top. When the cut again starts, the tool enters the slot while part *b* drags over the work as before.

(b)

FIG. 22.

For some heavy undercutting, a heavy bar is clamped in the tool clamp. This bar is fitted with a special tool block at its lower end, which carries a small tool and is so arranged that, at the backward stroke of the planer, it allows the tool to spring away from the cut. In the case of large planers the side heads usually answer much better for undercutting and also for side facing.

CUTTING SPEED OF THE PLANER.

24. Limit of Speed.—The **cutting speed of planer tools** is governed by the same laws that govern the speed of lathe tools. The speed must not be so high as to cause the tool to heat and to become dull too quickly. It should vary

with the hardness of the metal cut, the kind of metal, and with the kind of cut; that is, it should in general be slower for a roughing cut than for a finishing cut. With ordinary steel tools the following speeds may be considered good practice: For brass, 100 feet per minute; for cast iron, 45 feet per minute; for wrought iron and machine steel, 35 feet per minute; for tool steel, 20 feet per minute; for chilled iron, 2 feet per minute.

With the ordinary planer, there is no way of varying the cutting speed after it has once been determined and the machine has been erected. In belting a new planer, a cutting speed is selected that is slow enough for very hard metals and heavy cuts, and ever after the planer must run at that same slow speed, whether it be used for planing steel or for finishing a brass casting. This puts the planer at a disadvantage. In order to make planers suitable for hard metal and heavy cuts, they are usually belted to run at a speed of from 18 to 20 feet per minute.

25. Variable-Speed Countershaft.—If a planer is fitted with some device for changing or varying the speed, it results in a very great saving of time on many classes of work. One of the most common devices of this kind is the Reeves variable-speed countershaft, which is shown in Fig. 23.

This appliance consists of a rectangular frame that supports two parallel shafts *a*, *b*, on which are located the two cones *c*, *c* and *d*, *d* that rotate with the shafts, but can be moved along them. The apexes of the cones are toward each other. The cones are held in position by means of the bars *e*, *e* that are pivoted to the frame at the points *f*, *f*. When these bars are placed with their ends *g*, *g* in the position shown in the figure, the cones *c*, *c* on the shaft *a* are moved together, while the cones *d*, *d* on the shaft *b* are moved apart. An endless belt *h h* runs between these cones and transmits power from one shaft to the other. This belt is kept from squeezing down between the cones by blocks of wood fastened across it to stiffen it. Power from the line

shaft is transmitted by a belt to the pulley *p*, which drives the shaft *b* and the cones *d*, *d*. When in the position shown, that is, when the cones *d*, *d* are far apart on the shaft *b*, the belt *h* is quite close to the shaft. Consequently, the belt is driven at a slow rate of speed, or just as if it were mounted on a small driving pulley. The cones *c*, *c* on the shaft *a* are

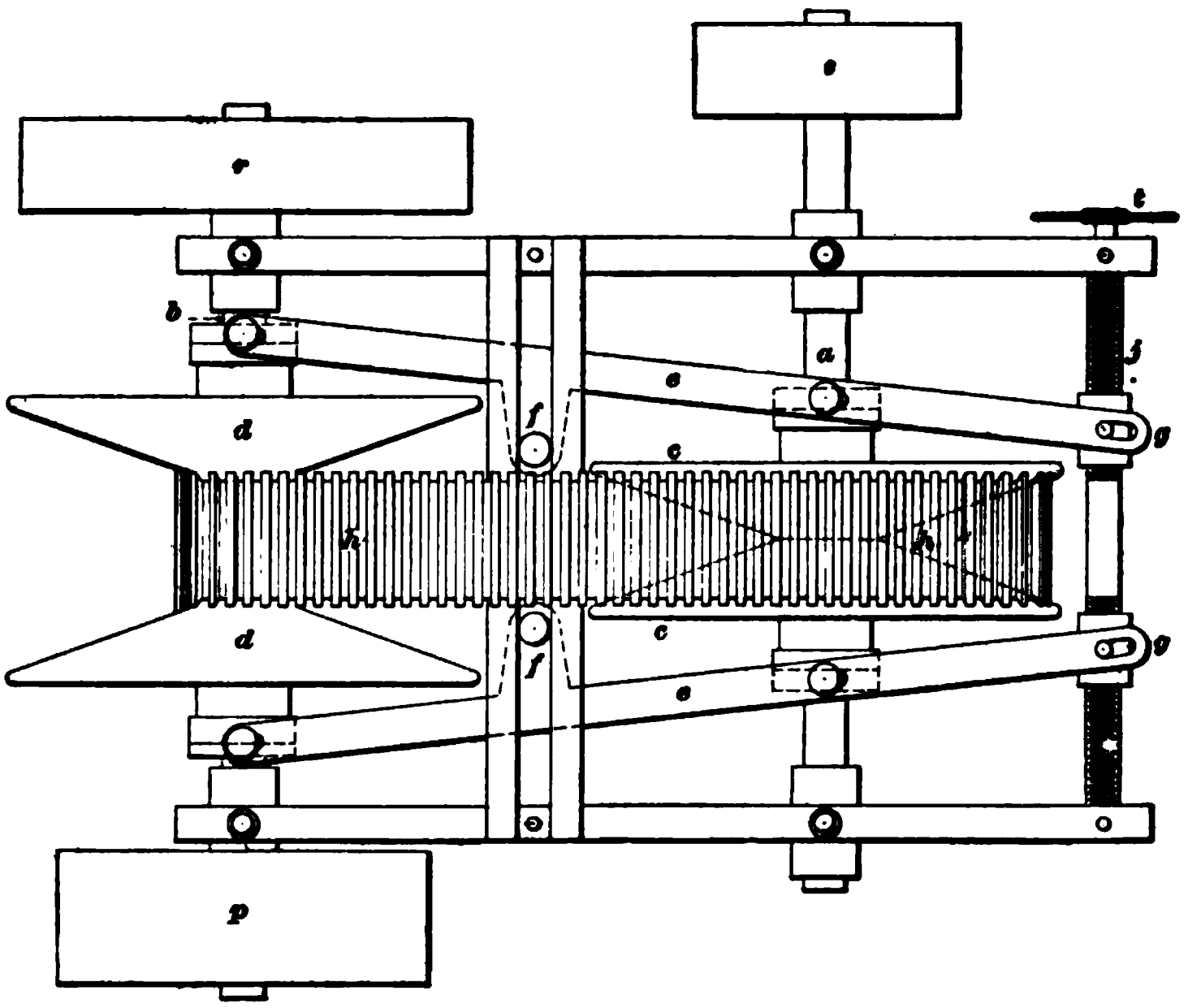

FIG. 23.

close together, and the belt *h* takes a position near their circumference. In consequence of this, the shaft *a* will be driven at a slower speed than the shaft *b*. If *c*, *c* are moved apart, the cones *d*, *d* will approach each other, and the belt *h* will come nearer the center of the shaft *a* and will move farther from the center of the shaft *b*. This causes the shaft *a* to revolve faster.

The application of this device to a planer is shown in Fig. 24. The reversing pulley *r*, Figs. 23 and 24, is put on

the constant-speed shaft *b*, thus giving a constant-speed return motion to the planer. The driving pulley *s* for the forward motion of the planer is on the variable-speed shaft *a*. The sprocket wheel *t*, which is operated from below with a chain, is fastened to a right-and-left-hand screw *j*, Fig. 23, by means of which the bars *e*, *e* are rotated about *f*, *f* in order to obtain any desired rate

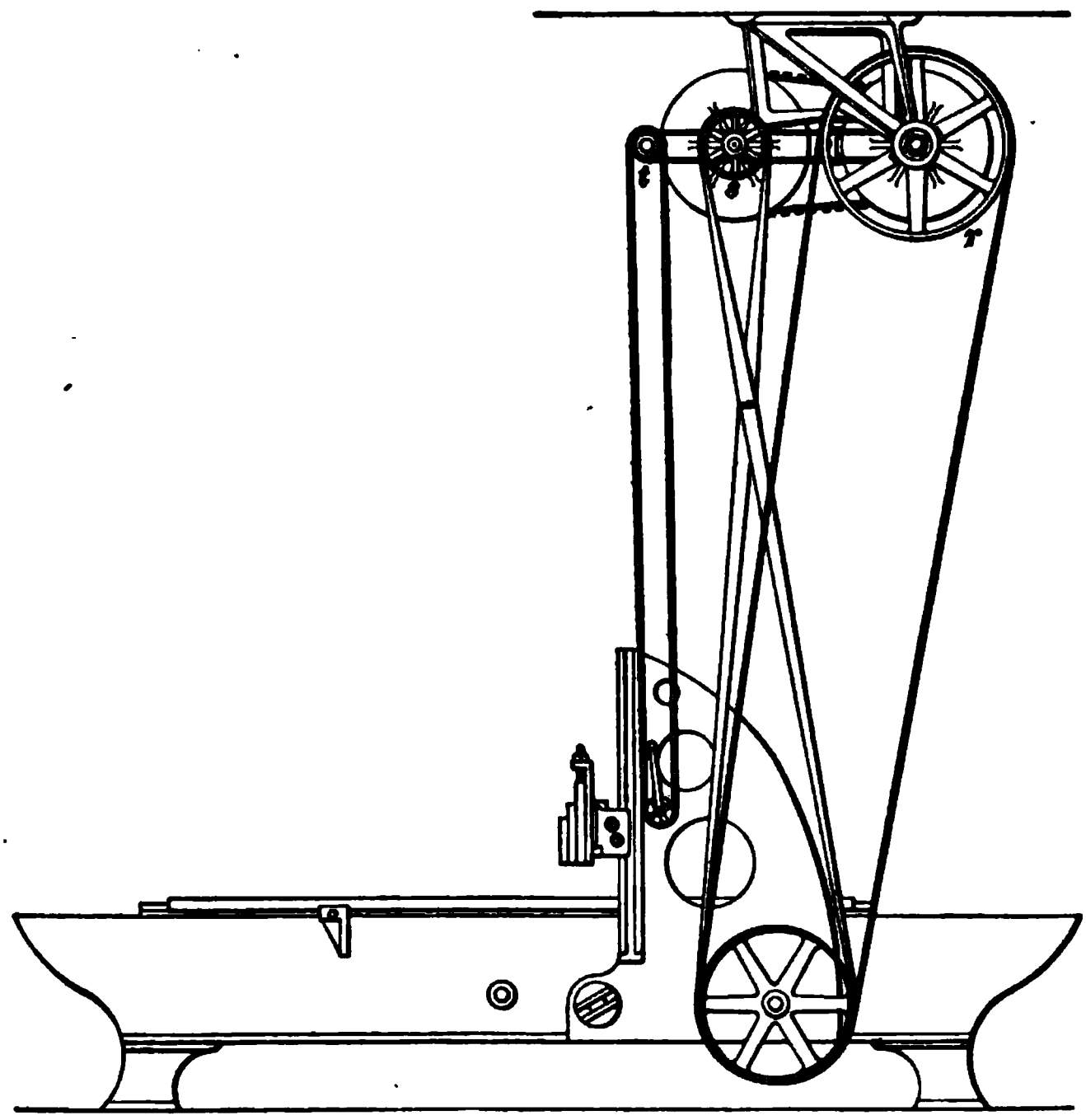

FIG. 24.

of speed. With this device, it is possible to adjust the speed of a planer to suit the conditions of work, as is done in lathe work. The adjustment should be made while the machine is running. In some cases a planer is driven by a pair of cone pulleys, which afford several changes of speed.

ACCURACY OF PLANER WORK.

26. Erecting a Planer.— In **erecting a new planer,** it should be set on a brick or stone foundation; the platen should be removed and the bed carefully leveled by testing the V guides. Care should be taken that the ends of the bed rest fairly on the foundation, so that there will be no tendency to twist the bed or put it in wind, as it is called. If the planer is well set at first, it will remain true for a long time. Detailed descriptions of the erection of both large and small planers are given in *Erecting.*

27. Errors in the Platen.—After a planer has been in use for some time the platen becomes out of true. This is caused by the driving in of the stop-pins, the careless handling of work, and the general hammering that the top of a platen receives. All these abuses tend to peen the top of the platen and stretch it, thus causing it to spring up considerably in the middle. When the platen springs up in the middle, it bears only on its ends; therefore, when a long cut, where the end of the platen runs over the end of the bed, is taken, the ends of the platen drop down. When this occurs, it is impossible to plane work straight and true.

In such a case, the platen should have a light cut taken over its top surface to make it true. When taking a cut to true a platen, the first cut should never be deep enough to cut its entire length. It is better to take a number of light cuts, for the reason that if a heavy cut is taken at the beginning, it will be found as the cut proceeds that the tension in the top of the platen is gradually released, and that the platen will slowly spring back to its natural shape, so that by the time the cut has been fed across, the platen has sprung back to its original shape and the front edge, which was made straight at the beginning, will be found to be concave. Another light cut will be necessary to finish the platen straight and true.

Before taking a cut over a platen, the cross-rail should be tested for alinement with the ways, and if not in perfect condition it should be adjusted to the ways and not to the table. This always insures the accuracy of angles and parallelism of work done on the machine.

28. Error in the Cross-Rail.—Before a planer platen is trued by planing, the cross-rail should be tested to see if it is level and parallel with the platen. The cross-rail is raised or lowered and kept level by the elevating screws in the housings. These screws have the same pitch, so that when the cross-rail is moved, each end moves the same amount; the cross-rail is thus kept parallel with the bed. It sometimes happens that heavy cuts are taken when the cross-rail is not securely clamped to the housings; a strain is then brought upon the elevating screws and the nuts, which throws the cross-rail out of adjustment. When the cross-rail is not parallel to the platen, it will cause the work to be planed thicker at one edge than at the other. The cross-rail may be tested by adjusting a tool in the head so that it just holds a piece of paper on a cylindrical piece laid in one of the **V** guides and then running the head over the other rail and testing the tool over the same cylindrical piece laid in the other **V**. If the rail is not parallel to the **V**'s, it must be made so by facing off the hub of one of the gears at the top of the adjusting screws, or adjusting one of the gears on the horizontal shaft that connects the screws. The screws should always be turned so as to raise the cross-rail when making an adjustment, as this takes up all lost motion.

29. Spring of the Planer.—In some of the old designs of planers, the bed and housings were exceedingly light when compared with the rigidity of design shown in the modern planer. With the modern planer in good adjustment, there is little danger of error due to the distortion or spring of the machine, at least when taking light finishing cuts. If the cross-rail or the head is loose, there is danger of the tool springing into the work.

30. Spring of Work Due to Clamping.—The greatest error is usually due to the spring of the work, which is not only caused by improper clamping, but also by the releasing of internal stresses that have been set up in casting or forging. This point is again emphasized, as a serious distortion of the work may be produced by a very slight pressure of the clamps.

31. Spring of Work Due to Its Weight.—The weight of the piece is often sufficient to cause a considerable deflection. Suppose that a long cast-iron piece similar in shape to the bed of the planer, as, for instance, that shown in Fig. 25, is supported only at its two ends. Assume that

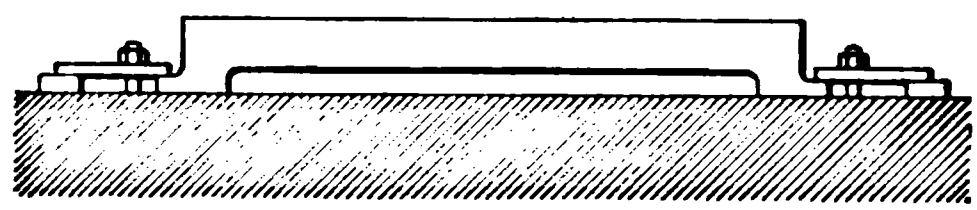

FIG. 25.

the clamps are applied carefully, so that the work is not sprung in clamping, but that the piece is left unsupported at the center. Then, the weight of the work in this case may cause it to bend down considerably in the center. When the tool presses on the top in taking a cut, the pressure of the tool will still further press the center of the work downwards. The result will be that if the piece is turned over on its side, it will be relieved of the weight that tended to deflect it; the finished face will then be found to be far from straight. In such a case as this, jacks or supports should be put under the work to support it throughout its length.

32. Internal Stresses.—Another source of error that prevents a planer from planing a straight surface is that which arises in cast or forged work from the releasing of **internal stresses**; these stresses are created in castings

and forgings by uneven cooling of the pieces. There is a surface tension in the skin, or scale, of the casting or forging, and usually there also exist local stresses, due to uneven hammering or cooling of the piece, which tend to warp it out of shape. These stresses usually act in different directions, with the result that when one is removed, the remaining stresses cause the piece to change slightly in shape. The action of these internal stresses manifests itself very strongly when finishing a long, thin casting straight and parallel.

Suppose a casting which is straight be clamped carefully, so that when it is laid on the platen it has a fair bearing, and a cut is taken over the top so that it is straight. Upon removing the clamps, the piece may spring up in the center, as shown somewhat exaggerated in Fig. 26 (*a*). Before the

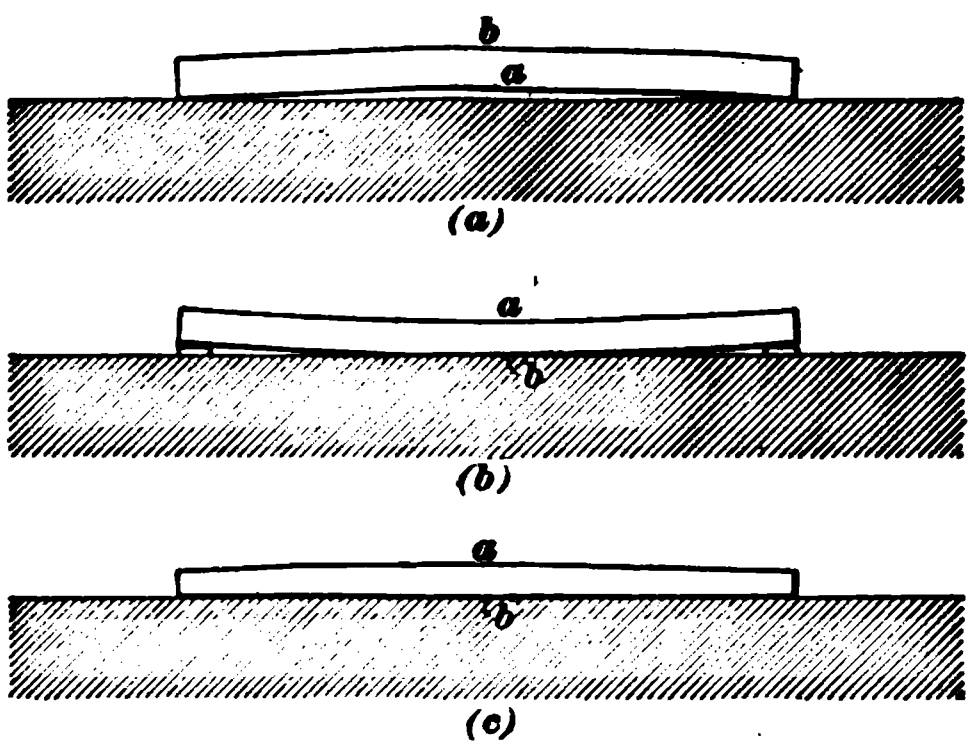

FIG. 26.

piece was planed, the surface tension in the two sides *a* and *b* was about equal; consequently, the piece remained straight. Upon taking a cut over one side, as *b*, part of the surface was removed and, consequently, a part of the surface tension was relieved. The side *a* being now under the greater surface tension, the result is a bending of the work, as shown. If the piece is turned over, as shown in Fig. 26 (*b*), and

carefully clamped with pieces under the ends, so that it will not be sprung in clamping, and if a cut is now taken over the surface *a* as deep as the cut taken over the surface *b*, it will be found upon releasing the clamps that the work will again change its form, this time springing back to about its normal shape. The face *b* will again be nearly straight and the face *a* curved, as shown in Fig. 26 (*c*). After the first cuts are taken and the skin is removed, there is less tendency for the work to change its shape. Because of this change of form in work, due to the removal of the surface tension, it is always desirable to take all the roughing cuts before any finishing cuts are taken. If the work is very thick and heavy, and the surfaces small, there is less danger of the work changing its shape than on light, thin work that is machined all over. It is a good rule, however, whenever it is possible, to rough out the work all over before any finishing cuts are taken.

SPECIAL PLANER WORK.

33. Work Too Long for the Platen.—It occasionally occurs that a piece of work is too large to be handled upon the planer in the ordinary way, and in such cases special rigs or devices must be used. When pieces longer than the stroke of the planer are planed, one end of the work is clamped to the platen while the other end extends beyond. When the free end overhangs very much, it is supported on bearings or rollers. After one end is planed, the work is moved along the platen, so that the finished part projects and the unfinished part is planed. Considerable skill and care is necessary in resetting the work, so that the two parts when finished will be as true as though the work had been planed without resetting.

34. Work Too Wide for the Housings.—When work is too wide to pass between the housings and is not very long, a special extension head may be made, as shown

in Fig. 27. A bracket *a* is fitted to the slide of the down feed; the tool block *b* is then attached to the outer end of the bracket or extension head. The bracket is made long enough to reach over the work when the latter is very close

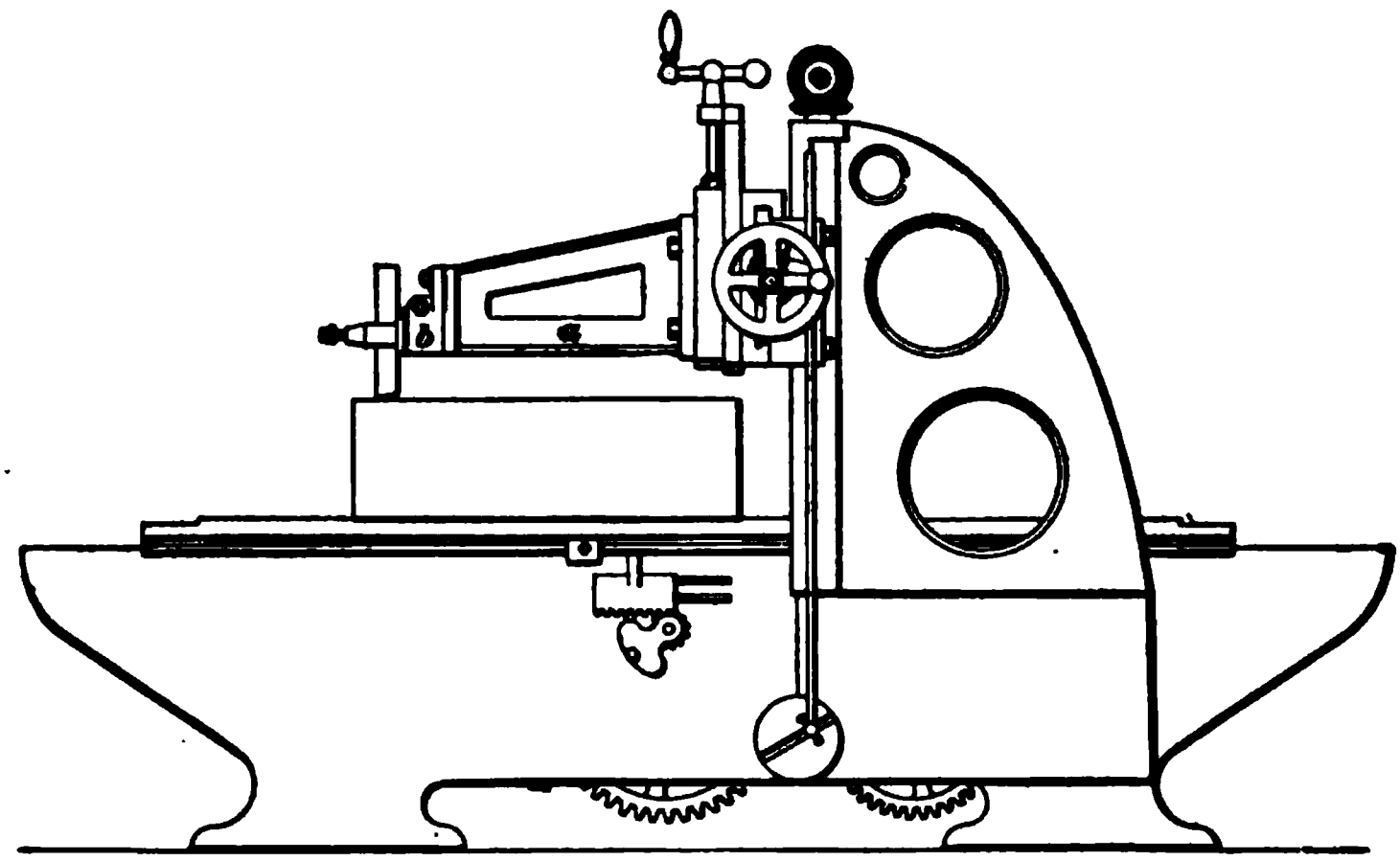

FIG. 27.

to the housings. The spring of the long arm and the lack of rigidity in the cross-rail make it rather difficult to take a heavy cut; the device will do the work, however, when no better means is at hand.

35. Special Rig for Planing Curved Surfaces. For some kinds of work, **special devices** and **rigs** may be devised to save time. Fig. 28 shows an end view of a planer fitted with a rig devised for planing a curved surface on a casting *c*. A special long head *a* is pivoted above the work at the point *b*; the distance from the point of the tool to *b* is made equal to the radius of the arc to be planed. The regular planer head with the down feed is attached to the lower end of the special head, which is gibbed to the curved part of the cross-rail so that it can slide freely as it swings about the center *b*. In operation, the cross-feed motion is

used as in ordinary planing; the tool is adjusted to the work by the regular down feed. A curved surface is produced by

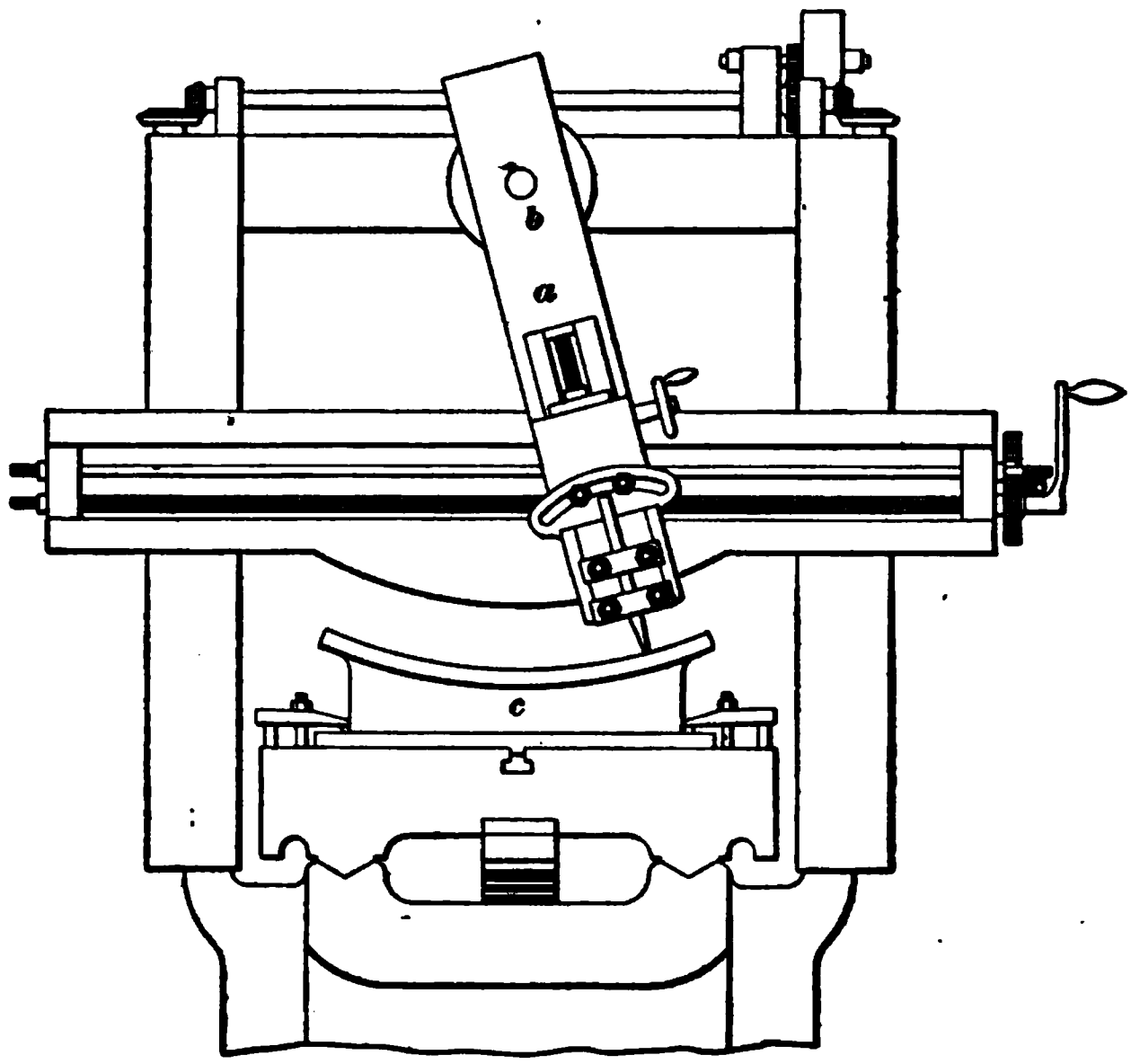

FIG. 28.

this device as easily as a flat surface is planed on an ordinary planer.

36. Planing Links. — When **planing links,** it is necessary to arrange the work in such a manner that it will travel through a curved path so that the planer tool may cut the desired curve. This may be accomplished in several ways. Probably the simplest method of planing a link is that illustrated in Fig. 29, where the work *a* is bolted to an auxiliary table *b*. This table is rigidly attached to a bar *c*, which is provided with a long slot *d* for the purpose of allowing the pivot pin *e* to be adjusted to any radius that may be desired. The pivot pin *e* is securely attached to a fixed support. In the device shown the outer end of the bar *c* is supported

by the guide *f*, along the upper edge of which it is free to slide. The radius of the link being planed is determined by the position of the pivot pin *e* about which the bar *c* rotates. The plate *b* is held between strips *g*, which are bolted to the planer table as shown. These strips are so adjusted that they hold the plate *b* down on the surface of the planer table, and also prevent any motion in the direction of the length of the platen. As the platen moves backwards and

FIG. 29.

forwards the plate *b* rotates about the center *e*, and in so doing slides backwards and forwards across the platen. Sometimes much more elaborate devices, having carefully adjusted gibs, are provided for this work; but in any case the edge of the plate *b* must be an arc of a circle having a diameter equal to the distance between the clamp pieces *g*. The one great advantage of this device is that the exact radius of the link can be determined and the machine set up accurately without much difficulty. The greatest disadvantage is that the bar *c* must extend a long distance to one

side of the planer, and hence, prevents the placing of a number of planers close together.

37. Another device for planing links is shown in Fig. 30. In this case the work is fastened to a plate *a* that is attached to the planer table by a pin that works in a suitable bearing in the center of the plate, as shown at *b*. The plate *a* is free to rotate about *b*, and slides on the base *c*, suitable ways being provided, as shown at *d* and *e*. At one corner of the

FIG. 30.

plate *a* there is a stud *f*, the upper end of which is fitted with a block that slides in the groove in the guide *g*. This guide is attached to the lower side of the cross-rail of the planer and can be adjusted to any desired angle with the cross-rail. If the guide *g* is placed parallel with the length of the planer platen, the plate *a* will not rotate about the pin *b*, and the tool will plane straight parallel work. By placing the guide *g* at an angle, however, the plate *a* is made to rotate about the pin *b*. By varying this angle, the amount of rotation of the plate about its center can be governed, and the curvature of the link varied within certain limits. It is not practicable to plane links of very short curvature by this

device, but for ordinary engine links it has proved very satisfactory. One advantage of the device is that it is entirely self-contained, that is, it does not extend beyond the sides of the planer, and hence planers can be placed as close together as though they had no such device attached to them. One disadvantage is that it is sometimes difficult to adjust the slide *g* so that it will exactly duplicate links of a given curvature. The device is generally set by trial.

38. Planing Spirals.—Sometimes it becomes necessary to plane a spiral. This may be accomplished by the device shown in Fig. 31, in which is represented an ordinary

FIG. 31.

planer with a pair of planer centers *a*, *b* placed upon it. The work *c* is placed between the centers, but is not secured rigidly to either of them. A bar *d* is fastened along the back of the planer, being clamped at one end to the planer housings and at the other end to a suitable device on the planer bed. Another bar *e* is clamped to one end of the piece *c* on which the spiral is to be cut. This bar *e* is kept in contact with the bar *d* by clamping any suitable weight *f*

to its outer end. As the platen travels backwards and forwards, the bar *e* slides on the top of the bar *d*, and on account of the inclined position of the bar *d*, forces the work *c* to make a partial revolution with each stroke of the planer. By varying the angle of the bar *d*, the portion of the revolution made for a given amount of planer travel can be regulated. The steeper the angle formed by the bar *d*, the steeper will be the pitch of the spiral. The planing is done with a tool formed so as to produce the desired spiral groove. By this device, spirals having a very long pitch that cannot be cut on an ordinary milling machine can be produced very satisfactorily, but it is impossible to produce spirals having a steep pitch. The centers *a*, *b* must be so placed that the work *c* will be in line with the platen, and the upper edge of the bar *d* must be well lubricated.

39. Special Gauges for Setting Planer Tools. When many pieces are to be planed to the same size and shape on the same planer, and when the faces to be finished are somewhat complicated, which involves careful adjustment of the tool for each piece, a special gauge may be used for setting the tool. As an illustration of the application of such a device, a tool-setting gauge used in planing lathe beds is given. When a lot of lathe beds of the same size are to be made, they are usually required to be planed alike. The problem of planing the top of a lathe bed with four V-shaped ways on it so that the ways are accurately located with reference to one another, is one that requires considerable care in the setting of the tool. The problem naturally becomes more difficult when a number of lathe beds are to be planed so that the ways are exactly alike on all of them. It can be solved very readily, however, by the use of a tool-setting gauge made to the correct cross-section of a finished lathe bed. This gauge *a*, which may be made of cast iron, is bolted to the platen in line with the lathe-bed casting, as shown in Fig. 32 (*a*); space enough is left between it and the end of the work for the planer to reverse without the tool touching the gauge. After the work is roughed out,

the platen is run back far enough so that the tool is brought directly over the gauge.

Suppose it is desired to finish the outer side of one of the V's. The tool is then adjusted so that it just pinches a piece of tissue paper placed between it and the gauge, as shown in Fig. 32 (*b*), the head having been previously set to plane the correct bevel. The tool is now fed up away from the gauge, and, after the stroke of the platen is adjusted to

FIG. 32.

cut the correct length, the tool is fed down over the face of the work in the direction of the arrow in Fig. 32 (*b*). In a similar manner, the tool is set for each of the other faces, and the work is thus planed in accordance with the gauge. By setting the tool with a piece of paper between it and the gauge, the tool can be carefully adjusted to the gauge; at the same time, a slight amount is left to be removed in filing and fitting. It may be seen that, by the use of a tool-setting

gauge, all the beds planed will be alike; furthermore, the tool can be easily and quickly set.

40. Planing Dovetails.—Screw machine beds are frequently provided with a dovetail guiding surface for the head as shown in Fig. 33 (*a*). The heads that fit on this

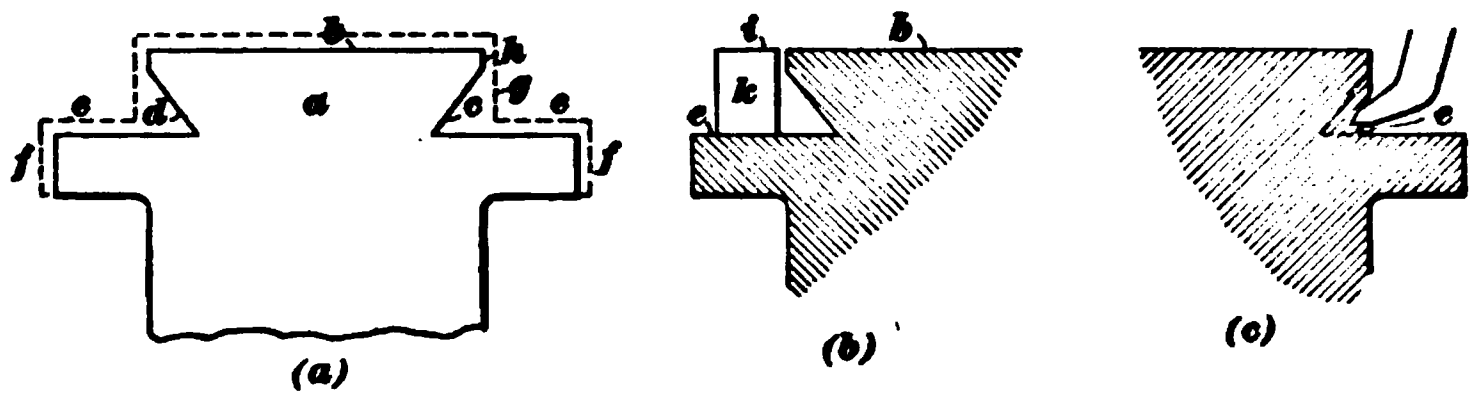

FIG. 33.

are frequently made to fit without any adjustment, that is, without any gibs, and as a consequence the work must be done accurately. Of course the groove on the head that fits on the bed must be planed to fit accurately over the projection *a*. The bearing comes upon the surfaces *b*, *c*, *d*. The casting for work of this kind is usually of the form shown by the dotted lines, so that the first operation must be the taking of a roughing cut over the surfaces *f*, *e*, *b*, and *g*, in order to remove the scale. This may be taken with any suitable tool, usually a round-nosed tool, though frequently a tool without side rake is used so that it can be fed in either direction. The bottom of the bed is also roughed off. After this, the bed is carefully reset and the work of finishing is commenced. A square-nosed tool is used to finish the surfaces *e*, *b*; the tool may be first set to the surfaces *e* and both of them finished. In order to obtain the correct distance between the surfaces *e*, *b* it is well to use a setting block *k*, Fig. 33 (*b*), which is set on the surface *e* and the planer tool adjusted to its upper face *i*, when it will be set right for finishing the surface *b*.

After the surfaces *b*, *e*, Fig. 33 (*a*), have been finished, it is necessary to rough out the stock in front of the surfaces *c*, *d*. This may be done with an offset roughing tool of the form shown in Fig. 34 (*a*). The cutting is done by the

faces *a*, *b* and the tool ground with little or no top rake and with no side rake. The planer head is set over to the required angle and the stock removed by successive cuts, as shown in Fig. 33 (*c*), in which the dotted outline shows the required form of the groove. After all the stock has been roughed out, the portion of the surface *e*, Fig. 33 (*c*), that is under the dovetail and hence could not be finished by the square-nosed tool, is finished by a tool of the form shown in Fig. 34 (*b*). In this tool is virtually an offset square-nosed tool, the cutting being done by the face *a*, the face *b* being cut away so that it can work under the bevel surface of the dovetail.

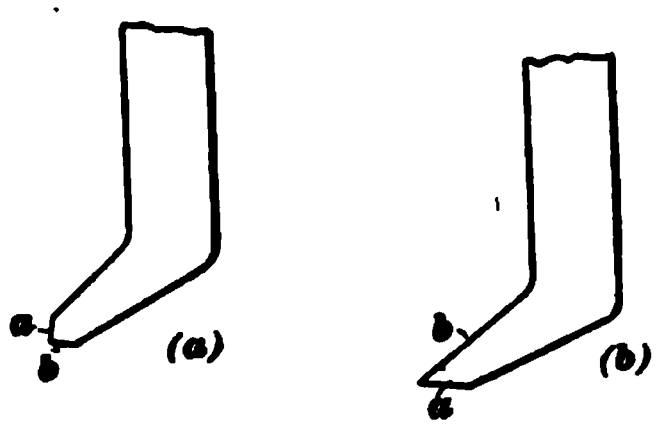

FIG. 34.

The bevel surfaces *c* and *d*, Fig. 33 (*a*), are finished with an ordinary side tool using a fairly coarse feed. One side of the work is always finished first.

Frequently for laying out the work a gauge of the form shown in Fig. 35 is used. The two parts of the gauge *a*, *b* are fitted accurately to one another. The portion *a* is laid against the end of the work and a line scribed around it before any undercutting is done.

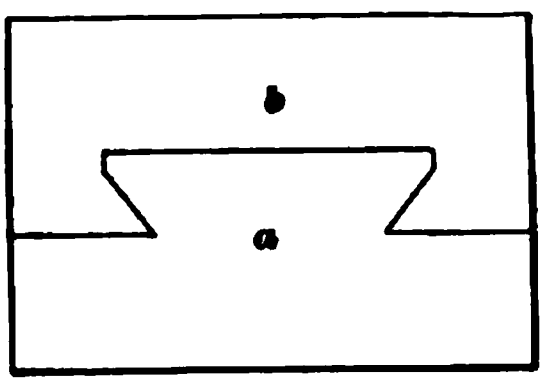

FIG. 35.

After the surface *c*, Fig. 33 (*a*), has been completed, the head should be swung vertically and the side tool used to finish the face *h* perpendicular to the face *b*. It is important to do this at the same setting at which the other faces are finished, as frequently the face *h* is the only surface to which the workman can refer in making measurements for fitting the work, and if the surface of a bed becomes injured or worn and requires redressing, the surface *h* is usually the only one by which he can set the casting accurately for refitting. After one side of the dovetail has been finished, the other side is planed in a similar manner, the tools used being similar to those shown in Fig. 34 (*a*) and (*b*),

but forged to the opposite hand. From this it will be seen that for planing a dovetail it is necessary to have one or more roughing tools, a set of offset right-hand and left-hand tools for working under the groove, and right-hand and left-hand side tools. In planing the second side of the dovetail, the portion *b* of the gauge shown in Fig. 35 is sometimes employed by setting one edge of it against the finished edge of the work at the end and scribing inside of the other edge, though usually the roughing and first finishing cuts are taken to the lines laid out with the part *a* and the part *b* is used only for testing the fit of the work during finishing. If the side *c*, Fig. 33 (*a*), is planed first, the final fitting will be done on the face *d*. Sometimes in place of fitting the work to a gauge the final fit is made by using one of the pieces that is to work upon the slide *a* as a gauge. Of course, in planing, no attempt should be made to make the pieces work together freely, as some stock must always be left for the fitter to remove when fitting the pieces.

Frequently, especially in heavy work, parts that are joined by dovetails similar to those shown in Fig. 33 (*a*) are not fitted directly to one another, but a gib is introduced, as shown at *c*, Fig. 36. The dovetail pieces *a*, *b* are planed and fitted together in a manner similar to that already described, with the exception of the fact that both pieces are fitted to gauges similar to that shown in Fig. 35. After this a strip or gib *c* is planed to fit between the pieces as shown. In the case of a gib, this strip is held in place by means of setscrews, as shown at *d*. The points of the setscrews fit into recesses opposite the center of the strip *c*. This arrangement allows of considerable adjustment for the taking up of wear between the surfaces upon the pieces *a*, *b*; it also simplifies the planing considerably on account of the fact that the fit is already made upon the piece *c*.

FIG. 36.

The sizing block shown at *k*, Fig. 33 (*b*), is usually made of hardened steel and accurately ground to shape. It should

also be marked with dimensions for which it is made. Instead of using a sizing block of this character a regular depth gauge is frequently employed for measuring from the surface *b* to the surface *e*.

41. Planing the Ways of Lathes.—The V guides on lathes form quite a difficult planer operation on account of the fact that there are four V's that must be accurately spaced and fitted. Fig. 37 shows the ordinary V's necessary

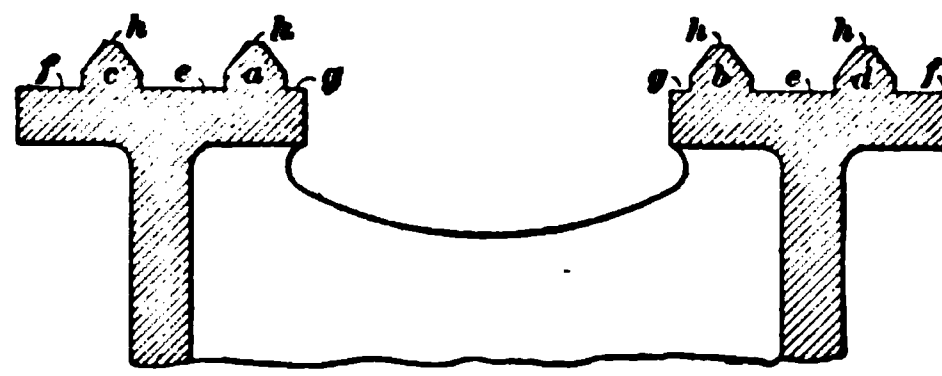

FIG. 37.

upon a lathe. The V's *a*, *b* are intended for guiding the tail-stock and headstock, and *c*, *d* for guiding the carriage. It is absolutely necessary that the four ways be parallel and that *a*, *b* and *c*, *d* be accurately spaced, but it is not absolutely necessary that the two sets be accurately spaced with relation to each other; that is, the distances between *a*, *c* and *b*, *d* may vary somewhat, provided the spacing of each pair of V's remains constant. Of course only a very slight variation is allowed in this matter, but the only effect of variation here would be to move the carriage from one side to the other in relation to the line of spindles of the headstock and tail-stock. Ordinarily each pair of V's is planed up independent of the other pair. Sometimes a complete gauge of the form shown in Fig. 38 (*a*) is used. The objection to this is that there are four bearing surfaces, and if three of them

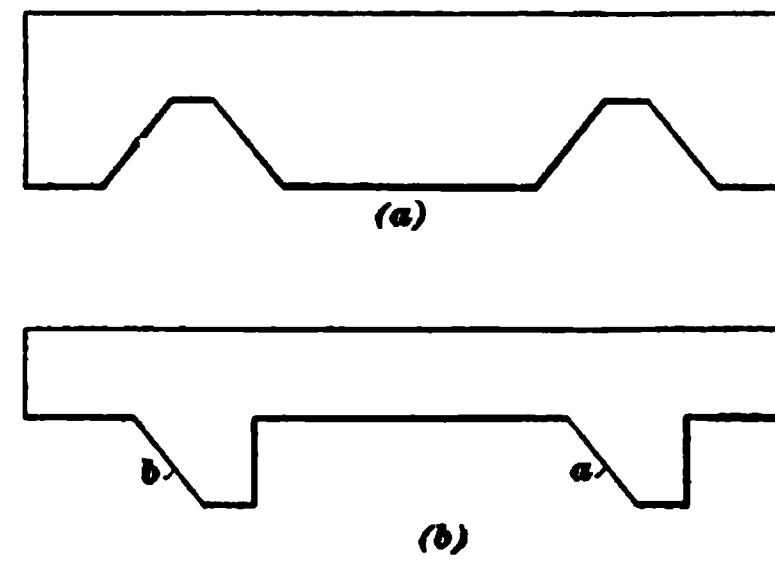

FIG. 38.

come into contact it is difficult to tell whether there is a perfect bearing between them and make the fourth one come accurately to a fit. In starting the work many builders prefer to use a gauge of the general form shown in Fig. 38 (*b*). This gauge has two inclined surfaces *a*, *b*, which are brought in contact with one side of the V's; the gauge is then reversed and used on the other side of the V's. If considered necessary, a gauge of the form shown at Fig. 38 (*a*) may be used for final testing.

In carrying out the work in the case of most medium-sized lathes it would take an excessive amount of time to use an ordinary round-nosed tool of the form shown in Fig. 32 (*b*) and feed it along the face of the V's by setting the head over to the proper angle. On this account a tool of the form shown in Fig. 39 is frequently used. These are forged right hand and left hand and are really simply offset square-nosed tools with considerable top rake. The cutting is done along the edge *a*, and it is necessary to have both right-hand and left-hand tools. One of these tools is set to the proper angle and fed against one side of one of the V's and a roughing cut taken over it of sufficient depth to remove all the scale and show clean metal; then by means of a gauge of the form shown in Fig. 38 (*b*), one side of the other V of the pair being worked upon is roughed out. The gauge for the other pair of V's is then taken and the corresponding sides of them roughed out. The other hand tool is then clamped in the tool block and the other sides of all four V's roughed out to their respective gauges.

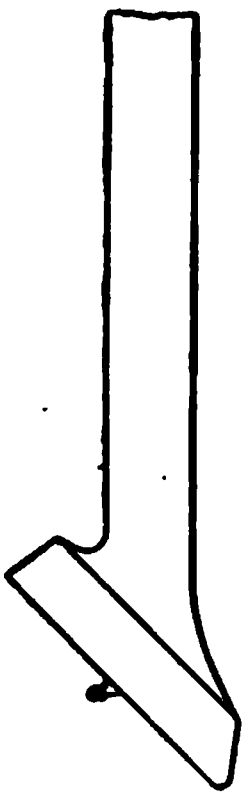
FIG. 39.

The surfaces *e* between the V's and *f*, *g* outside of the V's should be finished with a square-nosed tool before the V's are finished and a cut should also be run over the flat top *h* of the V's. The finishing of the V's is done with an ordinary side tool and with a head set over to the proper angle; in the finishing, as coarse a feed as practicable should be used. For setting all roughing tools a gauge of the form shown in

Fig. 32 (*a*) may be used, but gauges of the form shown in Fig. 38 (*a*) and (*b*) will be found convenient for the final fitting of the V's.

The planing of the V grooves in the headstock and tail-stock is carried on in a manner similar to that necessary in planing the V's already described. When planing V's in the headstock and tail-stock after the sides are finished, a square-nosed tool should be taken and a slight recess cut in the bottom of the groove, as shown at *a*, Fig. 40. This is to make sure that the surfaces of the V's on the headstock and carriage will always come in contact with those on the lathe and that there will be no danger of the bottoms of the grooves coming in contact. This space is serviceable in distributing the lubricant when lubricating the V's of a machine.

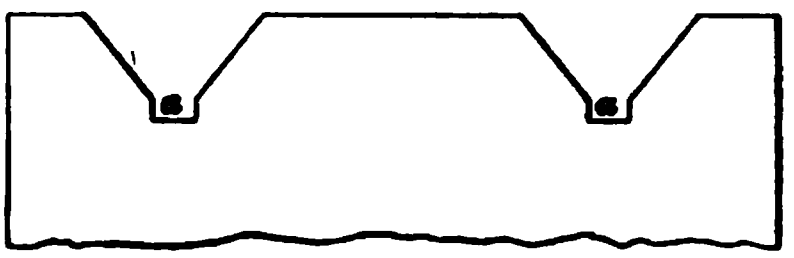

FIG. 40.

In setting any gauges that bear on two or more surfaces, it is well to put pieces of paper of uniform thickness under the bearing surfaces of the gauges and then see if the gauges hold all the pieces of paper with uniform pressure when they are in contact with the surfaces to be tested.

OPEN-SIDE PLANERS.

42. Planing Wide or Irregular Work.—A device for planing work too wide for the housings of an ordinary planer is shown in Fig. 27, but this device is limited in its application. To overcome these objections, the **open-side planer,** illustrated in Figs. 41 and 42, has been brought out. This consists of one heavy upright *a* rigidly attached to the bed *b*, which carries an ordinary platen *c*. The platen, however, is usually made somewhat heavier than would be the case with an ordinary planer having the same width of platen. The cross-rail *d* is supported from one end only by a housing, or post, *a*. Fig. 42 shows a back view of

the machine illustrating the heavy brace casting fitted between the upright, or post, *a* and the cross-rail *d* in order to give a cross-rail as stiff as that ordinarily obtained by the use of two housings. One or more planer heads *e* are attached to the cross-rail, as shown in Fig. 41. To support

FIG. 41.

the end of work that overhangs the planer table, an auxiliary rest *f* is provided, which runs upon a series of rollers *g* on the top of the I beam *h*. The I beam *h*, together with the auxiliary rest that it supports, can be moved toward or away from the planer bed *b* by adjusting it along the supports *i*. Both the bed *b* and the supports *i* should be placed upon the

same rigid foundation. The platen *c* is driven by a spiral gear operating in a rack under the table, the spiral gear being driven by bevel gears in the case *j*, Fig. 42. In the planer shown in Fig. 41, a tool head is placed on the vertical

FIG. 42.

post, as shown at *k*. Such a planer as this will be found very useful for many special classes of work that are too broad to be carried on an ordinary planer, or are so irregular in shape that they cannot be supported on a regular planer.

SHAPER AND SLOTTER WORK.

THE SHAPER.

DISTINCTIVE FEATURES.

1. Comparison of Planer and Shaper.—Both the planer and the shaper are used to produce flat surfaces, and both are adapted to about the same class of work. In fact, in many cases a piece of work may be done equally well on either the planer or shaper. This is especially true in the case of small work.

The principal points of difference between the planer and the shaper are found in the relation that the motions of the tool and work bear to each other, and in the method of obtaining the feed. In the planer the tool is stationary during the stroke and the work is moved past the tool in order to take the cut. In the shaper the work is stationary during the cut and the tool passes over it. In the planer the tool feeds sidewise during the return stroke of the work. In the column shaper, which is the most common type, the work feeds sidewise during the return stroke of the tool. The shaper is generally adapted to a lighter class of work than the planer, or for work that does not require a long stroke of the tool.

For notice of copyright, see page immediately following the title page.

CLASSES OF SHAPERS.

2. Types of Shapers.—The ordinary types of shapers may be divided into *column shapers* and *traveling-head shapers*, the distinction being made largely on account of the style of the frame of the tool and the feed. In the column shaper the work is fed sidewise during the return stroke of the tool, while in the traveling-head shaper the head is fed sidewise during the return stroke of the tool.

Column shapers may also be divided into two classes, *crank-shapers* and *geared shapers*, the division depending on the method of driving the tool. There are also several special types of shapers, or machines belonging to the shaper class, that will be considered after the work of the ordinary shaper has been discussed.

COLUMN SHAPERS.

CRANK-DRIVEN SHAPER.

3. Construction of Shaper.—This class of shaper consists of a column *A*, Fig. 1, that supports the driving mechanism and the various stationary and movable parts of the machine; a movable ram *B* that carries the cutting tool at one end; and a movable table *E* to which the work is fastened. The ram *B* slides in flat bearings formed on top of the column; at its front end it carries the shaper head *D*, which gives the down feed. This shaper head is so arranged that it can be swiveled around to make any angle with the top surface of the table. The ram is moved to and fro over the work by the driving mechanism within the column, which is operated by belting from a countershaft to the cone pulley *J*. The length of stroke and the position of the ram with reference to the work are adjustable. The shaper head *D* carries a tool block *H* similar to that of a planer. The table *E* is fastened by bolts to a saddle *M*, which is gibbed to the cross-rail *I* and can be moved along it either by hand

or by an automatic feed. The cross-rail can be raised or lowered by means of a screw on the vertical slide *G*, which forms part of the column, and can be clamped to it at any point. The table *E* usually has a removable vise *F* fitted to

Fig. 1.

it. To assist in supporting the table, a screw jack *N* is occasionally attached to the base of the machine. The amount of feed for each stroke of the ram can be adjusted by varying the position of a slide that can be locked by the handle *L*.

4. Driving Mechanism.—The driving mechanism of the column shaper shown in Fig. 1 is illustrated by the two detailed sections, Fig. 2. *A* is the column or main frame, *B* is the ram that carries at the front end the swivel piece *C*.

The slide *D* carries the tool holder *H*. The block *a* is secured to the ram *B* by the stud *b* and the tightener handle *c*. This block *a* is tapped and fitted to the screw *d*. The screw *d* can be rotated by the hand wheel *f* and the bevel gears at *e*. By this means the block *a* can be moved along the ram and placed at any desired position. This enables the operator to adjust the position of the ram over the work regardless of the length of the cutting stroke. If the ram in the position shown by the drawing is set for a short stroke, the cutting will take place at or near the center of the table. By means of the block *a* and the screw *d*, the

FIG. 2.

ram can be so adjusted that this cut will take place at either end of the table. Especially in die work, it is frequently of advantage to be able to cut to an angle or curved line without cutting the whole face of the work, or to cut close to a round boss or other projection on the work. This requires the changing of the position of the stroke after each stroke of the tool. The roller block *a* carries the pin *g*, upon which are mounted the rollers *h*. These rollers form a connection between the ram and the vibrating arm and reduce the friction. The vibrating arm *i* is slotted and connected to the driving gear *k* by the crankpin *l*, formed upon the

block l'. This block l' is secured in suitable bearings so that it can be moved across the face of the gear k. If the crankpin l is placed farther from the center of the gear k, the length of the stroke of the ram B will be increased, while if the crankpin l is drawn toward the center of the gear k, the length of the stroke of the ram will decrease until the pin l reaches the center of the gear k, when the stroke will become zero. In order to adjust this crankpin, the screw n and gears o and p are provided. The gear p is mounted upon the shaft q, one end of which is squared to receive a crank. A locknut K, Fig. 1, is provided on the shaft, so that when the gear p has been placed in the desired position, the shaft q can be locked and further motion prevented. The graduated scale r on the body of the machine and the pointer s on the ram serve to show when the proper position for the desired stroke is reached. The vibrating arm i is made very stiff and is provided with a clamp piece t, intended to prevent any spring in the arm. This clamp piece is shown partly broken away in Fig. 2 so as to show the gears behind it. The pinion u and shafts v and w, together with the clutch lever y, are a part of the back-gear arrangement. The rest of this back-gear arrangement is not shown, since it is on the side of the section toward the front of the machine, and hence could not be seen in this view.

GEARED SHAPER.

5. Construction of Shaper.—The **geared shaper** differs from the crank-driven column shaper only in the method employed for driving the ram. In the geared shaper a rack is attached to the under side of the ram; the latter is driven by spur gearing in the same manner as a spur-geared planer. The motion of the ram may be reversed by a reversing belt that is alternately shifted, together with the driving belt, from the tight to the loose pulleys; this method is similar to that employed for operating the platen of a spur-geared planer. In some shaper

designs the reversing is accomplished by friction clutches, which alternately grip and release the pulleys carrying the driving and reversing belts. These friction clutches are operated by tappets attached to the rams; the tappets are movable and can be clamped anywhere along the ram. They determine by their position the length of the stroke and the position of the ram at the beginning and end of the stroke.

TRAVELING-HEAD SHAPER.

6. Construction of Shaper. — A style of shaper known as a **traveling-head shaper** is used to some extent for work beyond the range of the column shaper.

FIG. 3.

Such a shaper is shown in Fig. 3. It has a very rigid box bed *a*, which carries the ram *b* on top and one or more tables on its side. The ram is mounted on a saddle *k*,

which can be moved along the bed either by hand or by an automatic feed. The line of motion of the saddle is at right angles to the line of motion of the ram; the tool is fed across the work by moving the saddle. The shaper head *c* is fastened to the end of the ram in the same manner as in a column shaper. Vertical slides *m*, *m*, which can be moved along horizontal ways on the front of the bed and clamped thereto, carry the table *e* and the vise *d*. The table and vise can be moved in a vertical direction by means of screws, and can be rigidly clamped to the vertical slides in any position. The work when small is either fastened to the table or held in the vise; if large, both may be used for supporting and holding it.

With this type of shaper, it is possible to take cuts on quite heavy work, since the work, on account of being stationary during machining, may be supported by jacks or by blocking placed on the floor. This cannot be done very well with a column shaper, where the work is usually supported entirely by the table with which it moves.

Many shapers of this class are provided with a stud, between the table *e* and the vise *d*, for holding work that is to be finished to a radius. The stud is sometimes provided with an automatic feed that turns it through a small portion of a revolution after each stroke of the tool. By this device any curved work having a radius less than the distance from the center of the stud to the bottom of the ram can be finished. The stud is sometimes made removable, so as to leave a hole through which long shafts can be placed. This makes it possible to cut keyways near the center of long shafts.

7. Driving Mechanism.—Fig. 4 is a right-hand side view of the machine shown partially in section. Corresponding parts have been lettered alike in Figs. 3 and 4. Power is transmitted from a line shaft or countershaft by a belt to the cone pulley *p*, which is fastened to a splined shaft *j* extending along the back of the bed. The shaft carries a pinion *k*, which has a feather fitted to the spline,

and consequently is free to slide along the shaft, but is forced to rotate with it. The pinion *k* meshes with the gear *f*. The gear *f* carries a crankpin *i*, which is mounted on a slide and can be clamped to the gear at any distance from the center within its range. A connecting-rod *n* is attached to the crankpin and also at *n'* to a block fitted to a slot in the ram *b*; the block can be clamped to the ram in any position

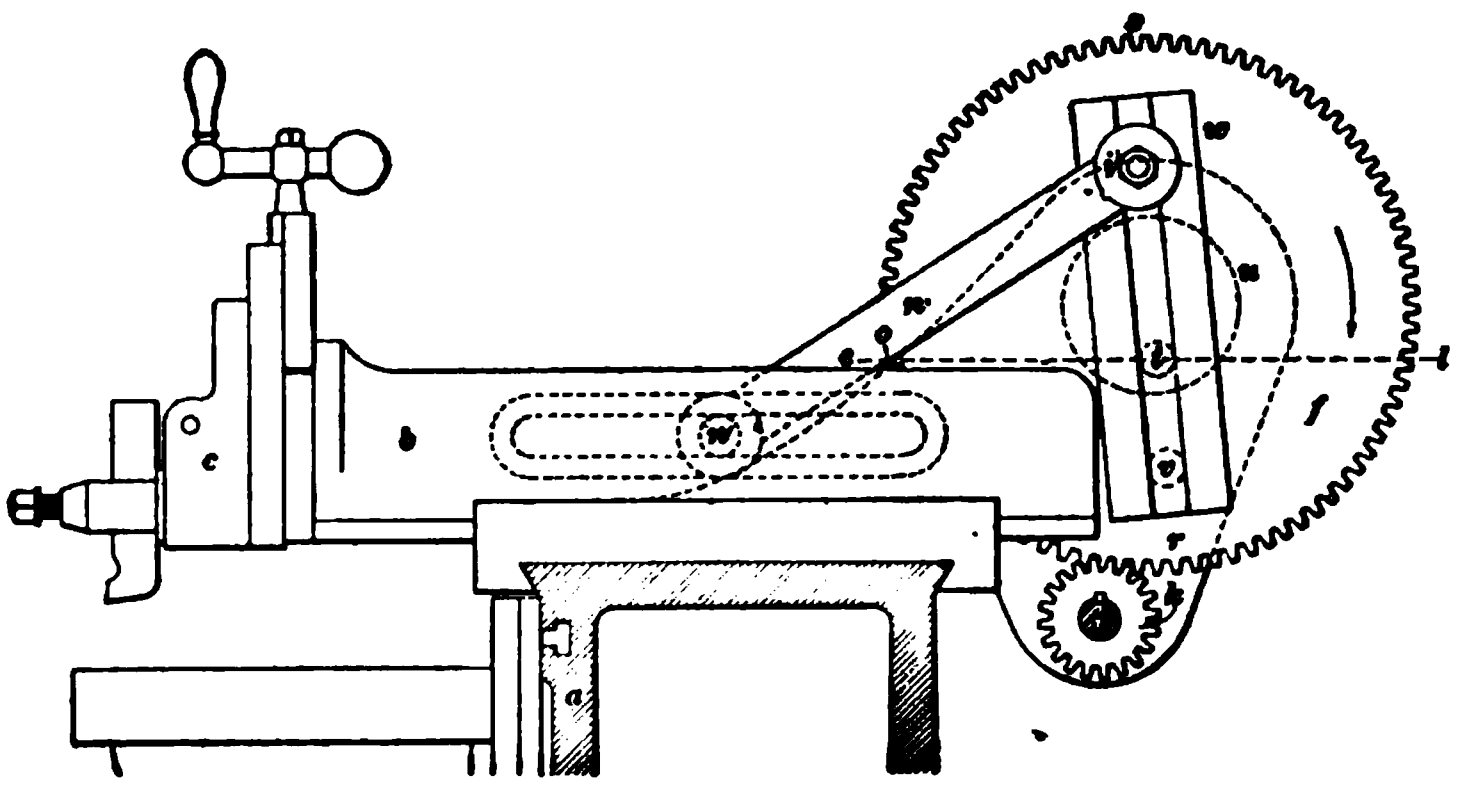

FIG. 4.

within the range given by the length of the slot. By varying the position of the crankpin *i*, the length of stroke of the ram can be adjusted; in order to change the position of the ram so that the tool will pass over the surface to be machined, the block at *n'* is loosened and the ram pushed in or out by hand until it is in the desired position, when the block is again clamped to the ram.

8. Quick-Return Motion.—The geared shaper is frequently provided with a quick-return motion, as shown in Fig. 4. The gear *f* revolves on a large pin or hub *u*. The piece *w* is secured to *u* by the eccentric pin *t*, and is provided with a slot in its back in which the driving pin *v* is free to slide. As *f* revolves it forces *w* to revolve about *t*, but owing to the eccentric position of *t*, the pin *i* makes one half

revolution while the gear is revolving through the angle *o r l*, and the other half while the gear is revolving through the angle *l s o*. By making the former the return stroke and the latter the forward stroke, the tool is given a slow advance and a quick return.

SHAPER OPERATIONS.

CUTTING SPEEDS.

9. Influence of Style of Shaper on Cutting Speed. The proper cutting speeds of shaper tools are the same as those of planer tools. In a crank-shaper, the average speed of the ram varies with the length of the stroke, since, with the belt on a given step of the cone, the shaper will make a constant number of strokes per minute, whether they be long or short.

Suppose the shaper makes 60 strokes per minute and the strokes are 1 foot long. Then the tool moves 1 foot forwards and 1 foot backwards in 1 second, or 2 feet per revolution; this is equal to a cutting speed of 120 feet per minute. Suppose the length of stroke is changed so that it is 1 inch long, but that the machine continues to make 60 revolutions per minute. Then, in 1 stroke, the tool moves 2 inches, and in 60 strokes it would move 120 inches, or 10 feet. Now, in one case, the cutting speed was 120 feet per minute and in the other case it was 10 feet per minute. Then, since the average cutting speed depends on the length of the stroke, it follows that a constant average cutting speed can only be kept by varying the number of strokes per minute. For this reason, crank-shapers are always supplied with a cone pulley for the driving belt.

In geared shapers, the cutting speed does not vary with the length of stroke, but remains constant, as is the case in planers. For this reason, geared shapers do not require cone pulleys in order to keep the cutting speed constant. Cone pulleys are often put on geared shapers to provide different speeds for different metals.

SHAPER TOOLS.

10. Relationship Between Shaper and Planer Tools.—As the cutting action of the planer and shaper is the same, the same class of tools can be used on both. In the shaper, as in the planer, the shank of the tool is always in a plane perpendicular to the line of motion of the tool or the work, and hence the angle of clearance always remains constant.

Special tool holders and inserted blade tools may be used in the shaper as well as in the planer. Tool holders, or in fact any tools, cannot be used effectively both on lathe and planer or shaper work, on account of the fact that the angle of front rake, or clearance, is constant in the shaper and planer and varies in the lathe.

HOLDING THE WORK.

11. The Vise.—Most of the work done on the shaper is held in the chuck or vise. The methods employed for setting the work square and true, so that it may be planed square and parallel, are the same as those used in setting work in the planer vise.

There are some vises especially made for shaper work. As a rule, the planer vise is provided with no method of adjusting the vise on the base after the work is clamped in position, but shaper vises are usually provided with a screw by means of which the vise proper and the work can be adjusted. Such a vise is shown in Fig. 5. The base of the vise *a* is clamped to the shaper table. By means of the graduated circle shown at *b*, the body of the vise *c* can be set at any desired angle with the slide *e*. When set to the desired angle, the vise is clamped to the slide by means of the nuts shown in the pockets at the sides. The slide *e* can be fed back and forth across the base *a* by a screw operated by the handle *d*. The body of the vise *c* is provided with a fixed jaw *g* and a movable jaw *h*. The movable jaw is adjusted by means of the screw *i*, which is operated by the

wrench *f*. After the jaw *h* is in the desired position, it is secured by a clamp nut *k*. The jaws *g* and *h* have removable steel faces. For work on cylindrical pieces, one of the

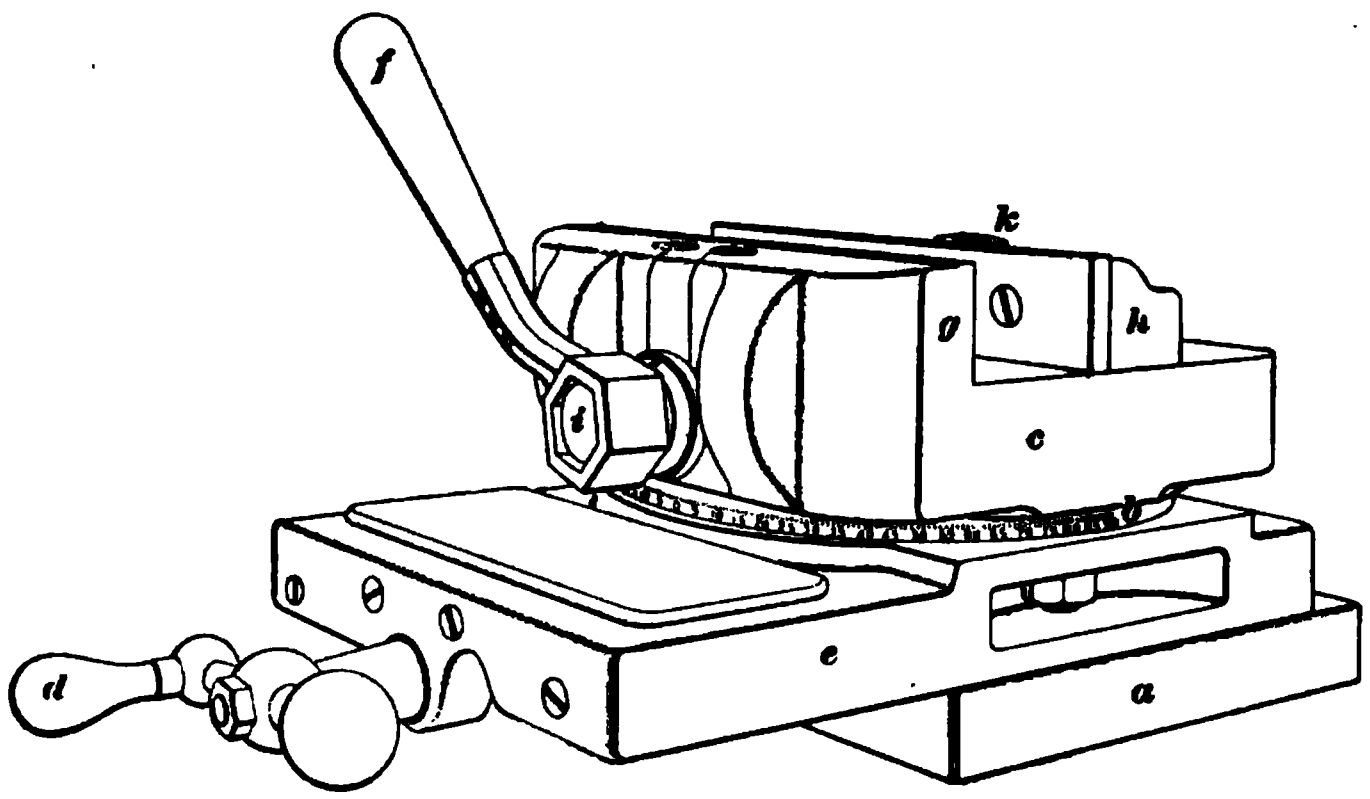

FIG. 5.

removable jaw faces is sometimes replaced by a V-shaped block that will facilitate the holding of any cylindrical piece of work.

12. Clamping Work.—When work is of such a form that it cannot be held in a vise, the vise is removed and the work fastened to the table. This is done with bolts, straps, and clamps in a manner similar to that in which work is fastened on the platen of the planer table. Sometimes toe clamps and plugs are also employed. With traveling-head shapers, very large castings or forgings that have small surfaces to be machined are frequently blocked up in front of the machine on suitable jacks and blocking, and clamped either to the table or front of the machine and then operated on by the tools.

TAKING THE CUT.

13. Range of Utility of the Shaper.—For short cuts on pieces of relatively small size, the shaper is usually better adapted than the planer. For cutting slots or keyways, or for cuts that terminate close to a shoulder, the

shaper possesses the advantage that it can be more readily set to take a particular length of stroke, and it will then cut that exact length of stroke each time. This is true particularly of the crank-shapers, but only to a limited extent is it true of geared shapers. On the planer or geared shaper the reversing point is not positive, because of the uncertainty in the slip of the belts and the gripping of the pulleys by the friction clutches.

14. Cutting a Keyway.—Whenever a cut terminates in the metal, a notch must be cut at the end so that the tool will pass out of the cut each time. Suppose that a keyway is to be cut in the end of a shaft, as shown in Fig. 6 (*a*).

(a) (b) (c)

FIG. 6.

The keyway should first be laid out by scribing lines to indicate its width and depth. At the place where the keyway terminates in the shaft, a circle is described equal in diameter to the width of the keyway. In this circle a hole is drilled, as shown in Fig. 6 (*b*), equal in depth to that of the keyway. The work is then set in the vise or clamped to the table, so that the lines on the end that indicate the sides of the finished keyway are perpendicular to the shaper table. In the case of a fairly large keyway, or when no tool of the right width is at hand, slots are cut along the outside edges of the keyway, as shown in Fig. 6 (*c*). This work is done with a parting tool. After the slots have been cut, the

metal shown at *a*, Fig. 6 (*c*), is removed with a square-pointed tool. If an attempt is made to take such a cut as is shown in Fig. 6 without first drilling or otherwise cutting out a place for the tool to run into, and thus cut off the shaving, each shaving will clog the slot slightly, so that after a few strokes the tool will strike with great force against solid metal. If the cut is continued, the tool will break, or the work will be pushed from the machine.

Large keyways are usually cut with several settings of the tool, as shown in Fig. 6. Small keyways are often cut by using a tool just the width of the slot. When the keyway is finished at one cut, it is well to drill two holes at the end and chip out between them so that the tool can be lifted clear of the work for the back stroke. With a single hole there is danger of the work catching the tool. When the keyway is cut the entire length of the work, there is no difficulty in lifting the tool for the back stroke. In some cases the keyway is planed a little narrower than desired, with the square-nosed tool, and the sides are finished with a side tool.

15. Cutting to a Shoulder.—Suppose that it is necessary to take a cut over the piece of work shown in Fig. 7, and that the surface *e* is to be partly removed up to

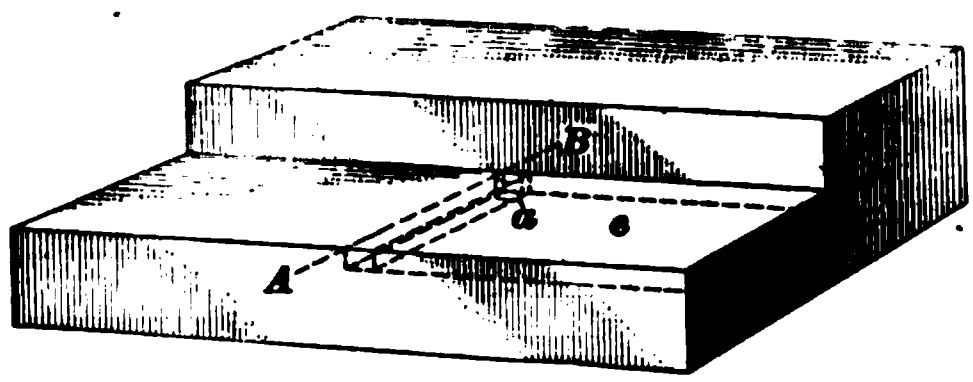

FIG. 7.

the line *A B*, as indicated by the dotted lines. Before this cut can be taken on the shaper, it will be necessary to cut a groove at *A B* equal in depth to the amount to be removed. This groove can be cut with a cold chisel and a hammer or by first drilling a hole at *a* and then cutting the groove on

the shaper with a parting tool. The part of the surface *e* indicated by dotted lines can then be easily planed away. In castings, when it is known that such cuts as these are to be taken, much work can be saved by coring out a space where the cut is to terminate. This saves the time required for cutting a groove with the chisel or by planing.

16. Clamping Work to the Saddle.—Work that is too high to be placed on the shaper table, or work that cannot be clamped to the table on account of its shape, can frequently be clamped to the saddle. An example of this is shown in Fig. 8, which shows a pair of legs for a lathe

FIG. 8.

clamped in position for shaping the upper surface. The table and vise are removed and the work *a* secured to the saddle by bolts and blocking. This method of holding work is similar to attaching it to an angle plate fastened to a planer platen.

When work is clamped against the front of the saddle, it is not always possible to test the setting with a surface gauge. This is also occasionally the case when rather large work is clamped to the top of the table. Then the setting of the work may be tested by means of a level or by a pointed wire, a scriber, or a tool held in the tool post, while moving the ram by hand. In some instances, the ram can be run out until it extends clear over the work; a surface gauge can then be inverted and held up against the bottom of the ram, along which it is moved in order to test the setting of the work.

17. Rack Cutting.—In some cases the shaper may be used as a rack cutter. The vise is set with the jaws at right angles to the line of motion of the tool, and the rack blank is clamped in it. A tool having its cutting edge formed to give the correct shape of tooth is set in the tool post, and is fed down into the work, thus cutting out the space between two teeth of the rack. The work is then moved sidewise the correct distance to cut the second space, and the tool is again fed into the work to the same depth as before.

For comparatively rough work, the spacing of the teeth may be laid out on the face of the rack, and the tool set as near as can be judged to the marks by moving the saddle by means of the feed-screw. A better way is to use the feed-screw as a spacing device. When the feed-screw is used for spacing the teeth, it is treated as a micrometer screw. The pitch of the screw is measured and a calculation made to see how many turns and what part of a turn will be necessary to advance the work one tooth. To make the fraction of a turn, it is necessary to provide some kind of an index on the feed-screw. Frequently one of the change gears belonging to a lathe can be clamped on the screw and used as an index plate.

EXAMPLE.—Let it be required to cut a rack to mesh with a 4 diametral pitch gear. (The circular pitch, or distance from the center of one tooth to the center of the next on the pitch line, for 4 diametral pitch is equal to .785 inch.) The work is to be done in a shaper having 4 threads per inch on the feed-screw for the saddle.

SOLUTION.—If the feed-screw has 4 threads per inch, each turn of the leadscrew will advance the saddle $1 \div 4 = .25$ inch. As the circular pitch of the rack is .785 inch, it will be necessary to make $.785 \div .25 = 3\frac{35}{250} = 3\frac{7}{50}$ turns of the feed-screw to move the work from one tooth of the rack to the next. A 50-tooth gear may be attached to the leadscrew and the screw given three turns and then moved far enough to carry seven teeth of the gear past some fixed point. If no 50-tooth gear is at hand, it will be necessary to select another; as $\frac{7}{50}$ is very nearly $\frac{1}{7}$, it would not result in a serious error if the screw were only given $3\frac{1}{7}$ revolutions. To accomplish this, a 28-tooth gear could be used and the screw given three turns and then moved four teeth farther.

SPRING OF MACHINE AND WORK.

18. Spring of the Ram.—The chances that the tool and the work will spring are greater in the shaper than in the planer. In the shaper, there is a tendency for the tool to spring away from the cut; this is due to the lack of absolute rigidity in the ram, and also to the looseness of the guides in which the ram slides. When the stroke is very long, the tendency of the ram to spring is greater than when the stroke is short. This is due to the fact that in a long stroke the ram has to extend a long way from the column. When taking a short stroke, the work should always be set as close to the column as possible.

On account of the excessive spring of long shaper rams, the average stroke of shapers is about 10 to 16 inches, and few exceed 30 inches. When the stroke of a shaper exceeds 30 inches, it is necessary to make the ram very heavy and rigid.

19. Spring of the Work.—The spring of the work itself and the sag of the table supporting it, especially if increased by any looseness of the gibs holding the saddle to the cross-rail, are fruitful sources of error. Errors due to these causes are made still larger by the action of the cutting tool, which, in forcing its way through the work, tends to spring it still farther away from the machine.

SPECIAL SHAPERS.

THE DRAW-CUT SHAPER.

20. Description of Draw-Cut Shaper.—In order to overcome as far as possible the errors due to the springing away of the work and the table as the tool advances, shapers have been designed in which the cutting is done during what would be termed the return stroke in the ordinary shaper. In other words, the tool, instead of being pushed across the work by the ram, is drawn across. From this fact, machines of this class derive the name of **draw-cut shapers.**

FIG. 9.

Fig. 9 is an illustration of such a machine. It will be noticed that in general appearance it does not differ from the ordinary column shaper. Since it is intended to cut

while the shaper head is moving toward the body of the machine, the tool block *a* is reversed on the ram *b* in order to allow the tool to swing away from the work while the ram is moving outwards. When the ram draws back into the machine, the tool block swings to its seat. As a matter of course, the tool must be set in the opposite direction from that which it occupies in the ordinary shaper; that is, its cutting edge must be toward the ram.

21. Advantages of the Draw-Cut.—For some kinds of work a draw-cut possesses distinct advantages. When a cut is being taken, the pressure due to the tool forcing its way through the metal is exerted toward the machine; in the case of work clamped to the saddle especially, it tends to hold the work more securely. Furthermore, in case of work bolted to the table or held in the vise, this pressure partly relieves the cross-rail of the stresses to which it is subjected by the weight of the table, vise, and work. In many cases, great rigidity can be secured by putting blocking or jacks between the work and the face of the machine, thus greatly reducing the spring of the work and the machine during the cutting operation.

OPEN-SIDE PLATE PLANER.

22. Description of Open-Side Plate Planer.—A modification of a planing machine designed for planing the edges of steel and iron plates is shown in Fig. 10. This machine is known as an **open-side plate planer.** Though commonly called a planer, it is really a modification of the shaper, on account of the fact that the work remains stationary during the cutting operation, while the tool moves.

The machine illustrated is arranged to plane one side and one end of the plate at the same setting. The plate is supported on the tables *a* and *b*, and is held in place by jacks *j* that butt against the girder *c*. The traveling head *d* carries the tools for planing the edge of the work. It is provided with two tool heads set in opposite directions, so that

h

FIG. 10.

the tool in one cuts when the head is traveling in one direction and the tool in the other when the head is traveling in the opposite direction. These tool heads are controlled by the screws *e* and *f*. The head *d* slides on guides *g*, and is fed backwards and forwards by a screw driven by the pulley shown at *h*. As there are tools to cut in each direction, the pulleys at *n* are both the same size. For planing the end of the plate, a head *i* fitting on a guide *k* is provided. The guide *k* is adjustable through an angle of about 10° each way, and can be clamped to the base *l*. This provides for the planing of the ends of plates at angles slightly more or less than 90° with their edges. The head *i* is provided with a single tool clamp, and cutting is done in one direction only. As the tool on *i* cuts in one direction only, a quick-return motion is provided by driving the feed-screw on the cutting stroke by the pulley *m* and on the return stroke by the pulley *n*. The length of cut made by the tools in either head is adjusted by shifting the tappets *o* and *p* so that they engage the blocks *r r* at the proper time to shift the belts.

SHAPERS FOR SPECIAL WORK.

23. Use of Shapers for Special Work.—In manufacturing any special line of machinery the cost of the work can very often be greatly reduced by employing special tools for carrying on certain operations. Tools of the shaper class are especially serviceable for this class of work. There are two general classes of special shapers, namely, portable and stationary. For very large work portable shapers are very handy for planing small bosses and other small surfaces on castings, the shaper being bolted to the casting on which it is operating or being bolted to an iron floor or floor plate at the side of the casting. Such tools are generally electrically driven or driven by a rope belt. Very often such a tool can be placed upon a casting on the erecting floor and certain machine operations carried on while the work of erecting is in progress, or two or more of the portable special machines may be operating on the casting at once. The special shapers of

the stationary type are usually somewhat larger than the portable ones, and are occasionally provided with more than one ram, so that more than one surface can be finished at a time.

24. Example of Shaper for Special Work.—The segments of large flywheels are frequently joined by links, as shown in Fig. 11. The faces *a*, *a* of the segments are

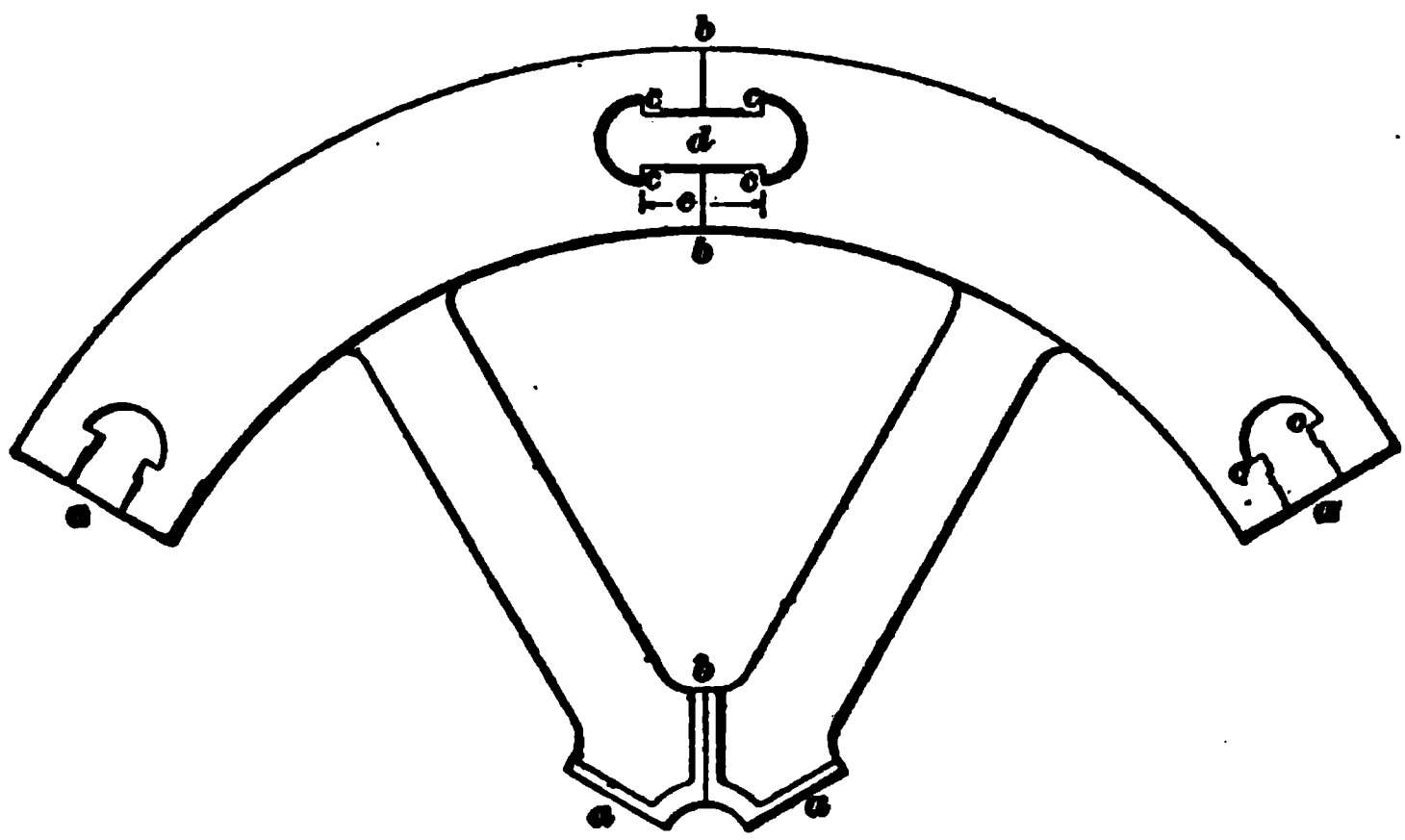

FIG. 11.

finished to the correct angle, so that when placed together they make a closed joint at the hub and rim, as shown at *b b*. At the rim the segments are held together by steel links placed on each side of the wheel in suitable recesses. One of these links is shown at *d*. The links are placed in the recesses while hot, and on cooling they shrink, thus drawing the joints closely together. The shrinkage allowance that is necessary to hold segments together is calculated, and the links are made so that the distance *e*, Fig. 11, is the same in all. In order that the heads of the links may have a good bearing on the shoulders *c*, *c* of the recesses, it is necessary to machine these shoulders to exact dimensions and make sure that the shoulders are an exact distance from the surface *b b*. In one shop the problem of properly machining these recesses

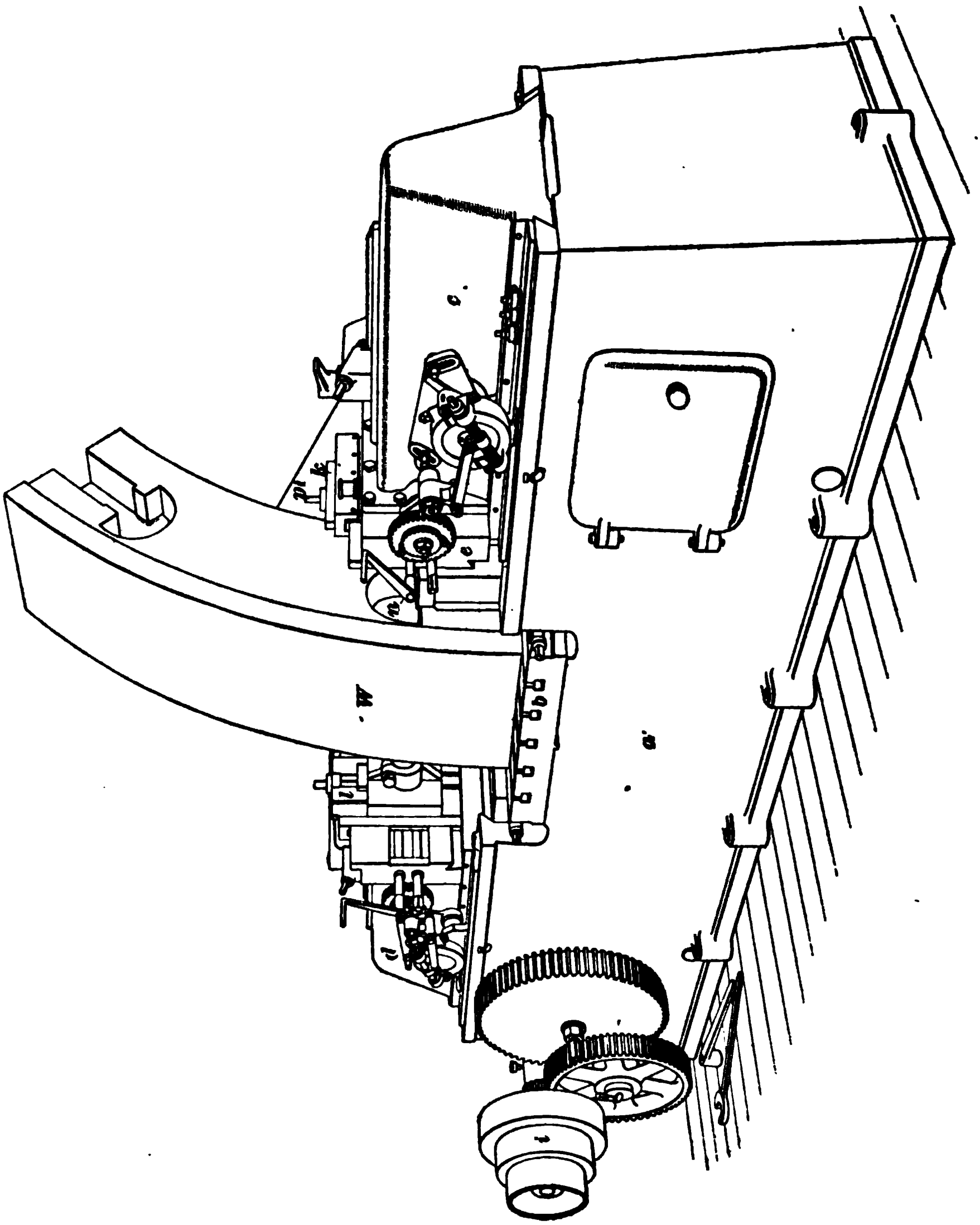

FIG. 12.

has been solved by the use of the machine shown in Fig. 12. This is a special double-headed shaper. A heavy base *a* contains the driving gearing by which the rams are operated and carries the work table *b*. The base *a* is T-shaped, having a short projection on the back side for supporting the arm of the segment being operated on. Both rams are driven by means of a belt on a pulley *i* that operates a gear-train, and

through it the mechanism inside of the bed *a*. The rams *c* and *d* carry the feed-mechanism. The work *W* is placed on a table as shown, and the rams are so adjusted that the tools will take the desired cuts in the recesses on opposite sides of the work. A larger view of one of the heads is shown in Fig. 13. The tool *p* is carried at the end of a bar,

or arm, *o*. The machine is provided with power feeds both for vertical and horizontal cuts, the slide *e* being arranged to feed the tool horizontally and the slide *k* to feed the tool vertically. When feeding by hand, the horizontal feed is controlled by a crank on the shaft *n* and the vertical feed by a crank on the shaft *m*. The rams *c* and *d*, though both driven by the same mechanism, can be operated independently of each other. The castings for the wheels are cored out at the back of the surface to be cut, so as to allow the tool an opportunity to run out of the cut at the back end of its stroke. By means of this machine the surface *c* against which the shoulders of the links bear, as shown in Fig. 11, and also the vertical surface against which the bodies of the links bear near *c*, are machined so as to fit the links accurately. While such special machines frequently cost a large sum of money, the saving that they effect more than pays for the investment where the line manufactured is of such a nature that there is a considerable amount of duplicate work.

THE SLOTTING MACHINE.

25. Characteristic Features of the Slotting Machine.—The **slotting machine** is a modification of the shaper and is similar to it in many respects. In the slotting machine, however, the ram moves vertically instead of horizontally. It is used for finishing flat or curved surfaces at right angles to a horizontal surface of the work. The slotting machine derives its name from the fact that it was originally intended for cutting slots or keyways in gears or pulleys, but it is now used for a large variety of work, where it is desired to produce vertical, flat, or curved surfaces. A machine of this class is illustrated in Fig. 14. It consists of a rigid frame *M*, carrying a platen or table *F* on which the work is secured. The tool is clamped to the head *L*, on the end of the ram *A*. Power is transmitted to the ram from the pulley *E*, through a pair of gears *N* to the crank-disk *B*. The crankpin *O* is adjustable in a slot in the crank-disk *B*. The connecting-rod *C* takes hold of the pin *P*.

The pin P is adjustable in the slot in the ram A, so that the position of the ram in relation to the work can be changed so as to cause the tool to cut at any desired portion of the work. The length of the stroke is determined by the position of the pin O in the slot in B. The ram is provided with a counterbalance weight D. The platen F is mounted on a

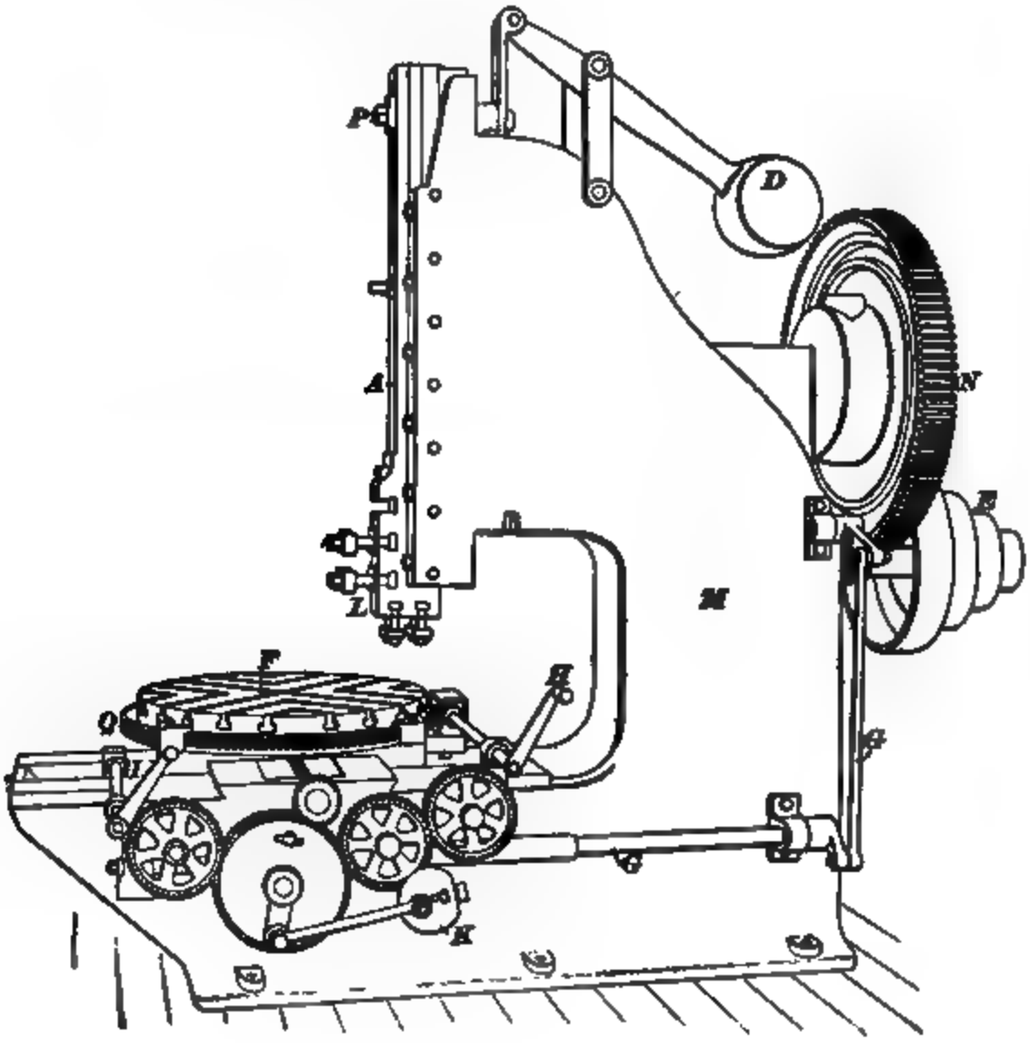

FIG. 14.

base that can be moved longitudinally in two directions at right angles to each other across the base of the frame M. The platen F can also be rotated by means of a circular rack Q and a worm controlled by the handle H. Power feed is provided by means of a rod and telescopic shaft as shown at G, G and a suitable set of gearing on the front of the machine. The amount of feed is controlled by adjusting a

pin in the slot upon the crank-plate *K*. The slotter is very similar to the crank-shaper, both in the manner of driving the ram and in the adjustment of the feed for the table. The end of the ram *L* carries two sets of tool clamps, which provide for fastening tools in two different positions at right angles to each other.

26. Setting the Ram.—When adjusting the slotter ram for a given piece of work, the ram should be so adjusted that the edge of the tool will pass by the lower edge of the work, but not touch the platen. To set the ram, it should be let down so that the tool rests on a piece of wood or soft metal on the platen. The machine is then turned by hand so that the crankpin *O* is at the lowest part of the stroke, after which the bolt *P* is tightened. When the ram is raised, the spacing strip may be removed from under the tool, and, for each stroke, the tool will stop short of the platen a distance equal to the height of the spacing strip.

SLOTTER OPERATIONS.

27. Setting the Work.—In planer work, a surface gauge can be used and the work set so that the line indicating the edge of the surface to be machined is parallel with the platen. The setting of slotter work cannot be tested in this way, because the line of motion of the tool is at right angles to the surface of the platen instead of parallel to it. The work must be clamped to the platen, so that the line indicating the edge of the surface to be cut, shown by the dotted line *A B*, Fig. 15, is perpendicular to the platen. This may be tested with a square. Parallel strips, or blocks, *c*, *c* must be put under the piece in order to raise it above the platen, so that the tool may pass entirely over the surface to be machined. After the work is set true, a tool is clamped in the ram, and the work is brought under it, so that the tool joint just comes to the line scribed on the work. The setting of the work is then tested by moving the platen past the tool point, and noting if the line follows the tool point. If it fails to do so, the platen, and hence

the work, may be revolved so that the point of the tool will just follow the line. The work will then be set, and be ready for the cutting operation.

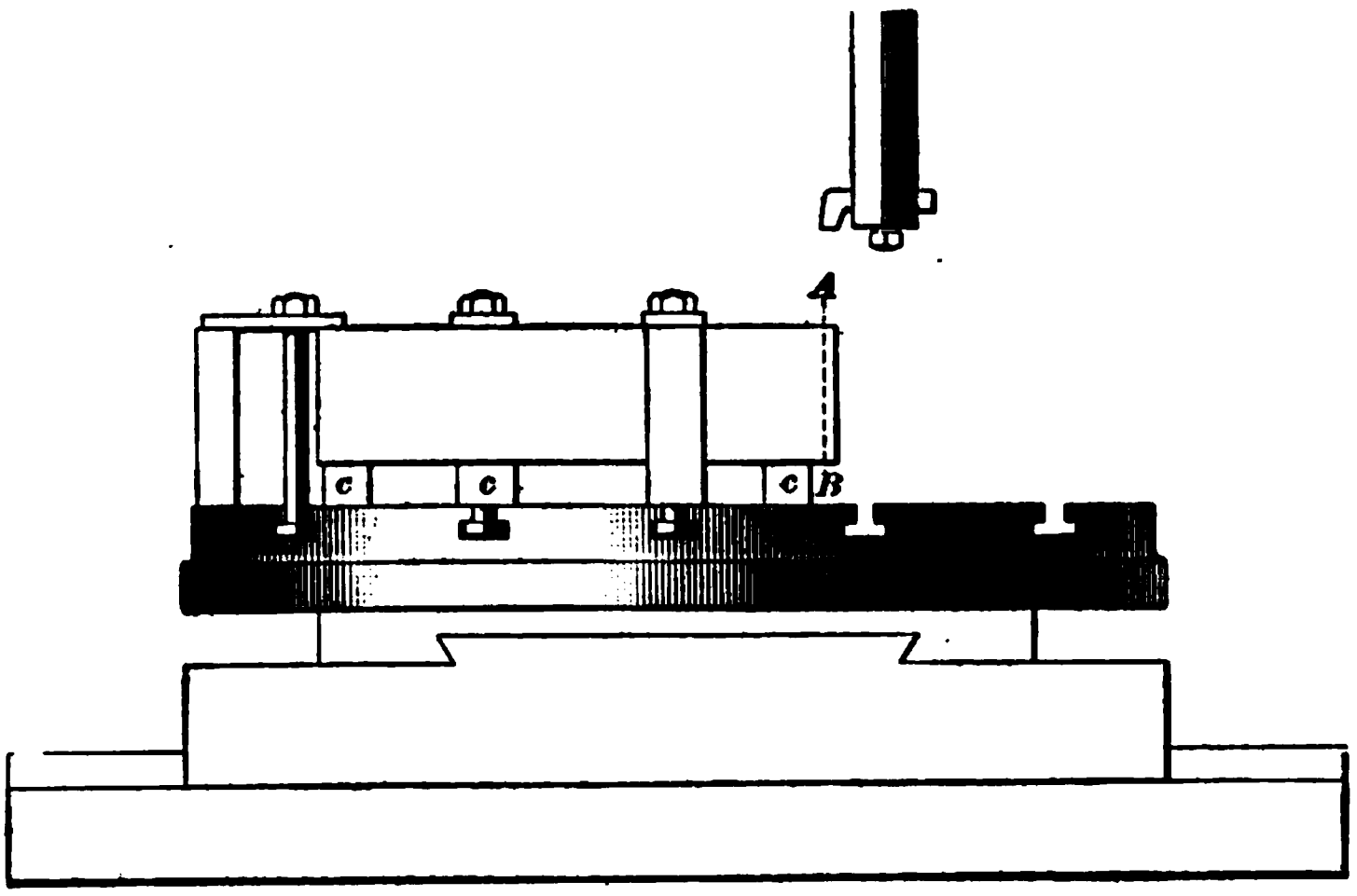

FIG. 15.

Bolts, pins, angle plates, and special holding devices may be used for holding work on the slotter platen in the same way that they are used on the planer platen or shaper table.

28. Clamping the Work.—The work to be operated on is clamped to the platen in the same manner in which work is clamped to a planer platen or shaper table. The same care is necessary in setting the work true and clamping it so that it will not be sprung out of shape.

The work for the slotter should be laid out with lines to work to. These lines are necessary in setting the work, on account of the fact that when a flat surface is to be planed, the line indicating the finished edge of that surface must be set parallel to one of the slides of the table.

29. Cutting Circular Surfaces.—When cutting circular surfaces on the slotter, the work must be set so that its axis coincides with the axis of rotation of the platen. For instance, if a cylindrical surface having a radius of 10 inches is to be finished in the slotter, the work must be

set so that the center around which the radius is described is in the axis of rotation of the table, and the platen must be adjusted so that the point of the tool is at a distance of 10 inches from the center. The feeding is done by rotating the platen slightly after each down stroke of the ram.

To aid in setting work having cylindrical surfaces, concentric circles are usually marked on the platen and may be used as guides; or, a cylindrical stake may be fitted to the center hole of the platen and used to measure from. In either case, after the work is set, it is best to revolve it past the point of the tool to be sure that it is correctly set. This applies to internal as well as external cylindrical surfaces.

30. Slotter Tools.—Many of the tools used for the slotter are different in appearance from those used for either planer or shaper work. The cutting edge is formed on the end of the bar so that it cuts when pushed endwise, and it is therefore under compression. Fig. 16 (*a*) shows a forged roughing tool for the slotter. The shank is generally made square, and the end is forged so that it is about like a parting tool. The cutting face that turns the shaving is on the end. To show the angles of rake and clearance in this tool, draw the line *A B* in Fig. 16 (*a*) parallel to the top of the platen; *C D* perpendicular to *A B* at the point *O* of the tool; *E F* along the end of the tool, and *H K* along the side of the tool. The angle *D O K* is the angle of clearance, and the angle *B O F* the angle of front rake. It may be seen from this that these angles are measured at right angles to the direction in which they are measured on a planer, shaper, or lathe tool. When the slotter tool is carried at the end of the ram so that its shank

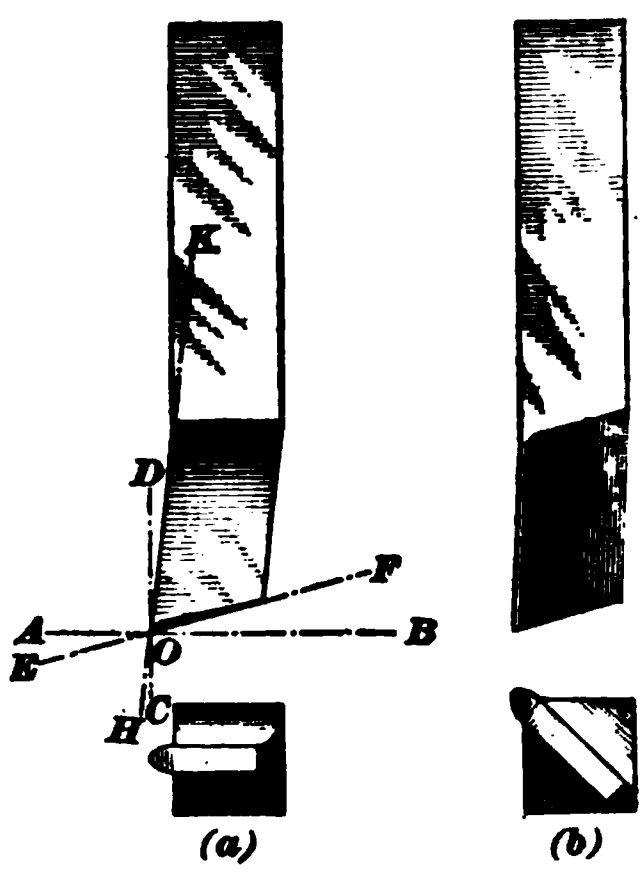

FIG. 16.

is at right angles to the line of motion, the clearance angle and the angle of front rake are measured in the same way as on a planer tool. When slotter tools are forged from the bar, they are made with narrow points for roughing cuts and wide points for finishing cuts, as is done in planer work. It is not possible, however, to use such coarse feeds for finishing work on the slotter as can be done on the planer.

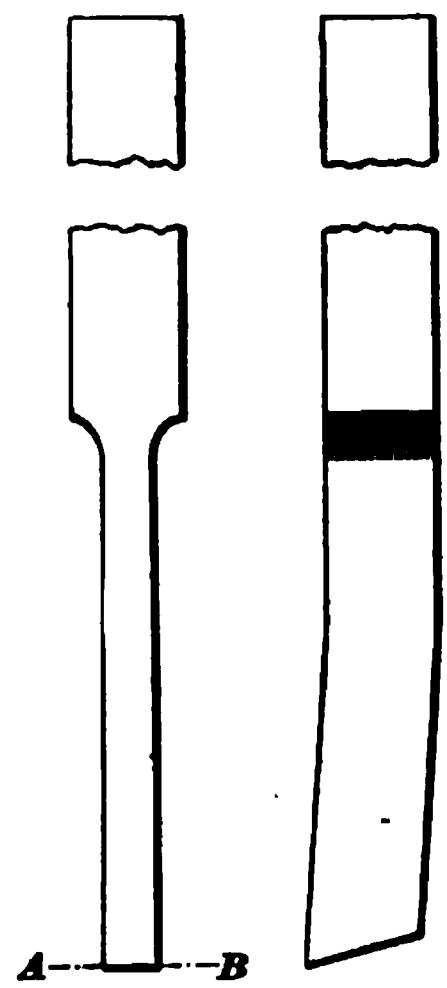

FIG. 17.

For the slotter, a good roughing tool for flat work may be forged with the blade diagonally across the shank of the tool, as shown in Fig. 16 (*b*).

When slotter tools for cutting keyways are forged from the solid bar, they are shaped as shown in Fig. 17, the cutting edge being along the line *A B*. If the slots are long, it requires a long, slim blade to reach through the work. When such slim tools are used, they spring away from the work considerably, and, consequently, time and care is necessary to complete the cut.

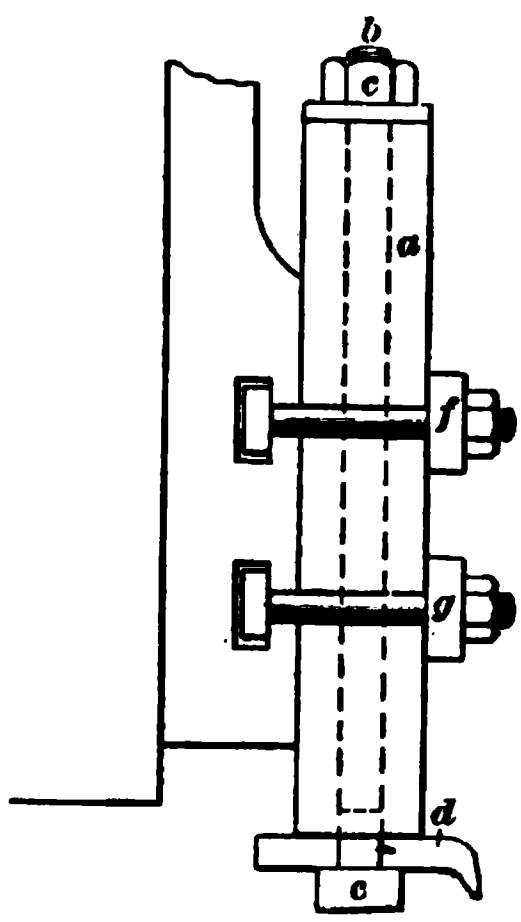

FIG. 18.

31. Slotter Bars With Fixed Tools.—The ordinary forged slotter tools require a large amount of steel, are heavy to handle, difficult to maintain in good condition, and require a large amount of space for storing them, on account of their size. To permit the use of small steel tools in the slotter, various forms of slotter bars have been devised, one of the most common forms of which is shown in Fig. 18. This consists of a rectangular body *a*, through which the bolt *b* is fitted. The bolt *b* is held in position by a nut and washer at *c*.

The lower end of the bolt is slotted to receive the tool *d*. The tool rests against the head of the bolt *e*. The bar *a* is clamped to an ordinary slotter head by the regular clamps *f* and *g*. The bolt *b* can be revolved in such a way that the tool *d* extends from the bar at any desired angle. This device facilitates the use of ordinary small planer or shaper tools in the slotter. The bar *a* can be adjusted up or down under the clamps *f* and *g* to some extent.

While this makes a fairly rigid bar for short work, it is not practicable for a long bar, and hence bars of the form shown in Fig. 19 are frequently used. In this case the regular clamps have been removed from the slotter head and two special clamps *B*, *B* substituted for them. These are held against the end of the ram by the bolts *b*, *b*. The slotter bar *c* passes through holes in the clamps and is held in position by the bolts *a*, *a*. A small steel tool is fitted in a slot in the lower end of the bar *c* and secured by a setscrew, as shown. The cylindrical form of the bar *c* permits of its being rotated so as to bring the tool or cutter to any desired angle of the work. This will be found advantageous when slotting out irregular forms having internal angles, such as square holes. The cutter blades or tools are rigidly

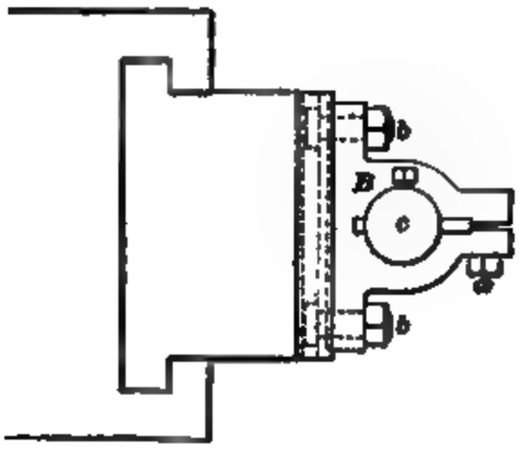

FIG. 19.

fixed in both of the forms of bars shown in Figs. 18 and 19, and hence, on the return stroke the tool drags over the work. If the tool is sharp, it will usually cut true enough so that the bar will be sprung very little on the return stroke, and the dragging of the tool will not injure the edge of the tool materially. If, however, the tool is given too much top rake, the edge may break or crumble off on the return stroke. The feeding of the work does not occur until the tool has returned to the top of the stroke, and hence the edge is out of harm's way during the operation of feeding.

32. Slotter Bars With Tool Blocks.—Some heavy slotter bars are made with tool blocks in the lower end that are pivoted in the same way that the tool block on the head of a shaper or planer is pivoted, so that on the return stroke the tool will lift away and not drag on the surface of the work. In such a bar the weight of the tool would naturally cause the block to hang away from the work at all times, and hence it is necessary to provide springs for holding the block against its seat. Sometimes the slotter tools themselves are drilled and fitted on pins and held in place by springs, so that the tool itself becomes a swinging block. Care must be taken with bars of this class to see that the springs always hold the block or tool against its seat, and to avoid the possibility of dirt accumulating under the tool or block, for if the tool is not firmly seated when the cut begins, it will come down against its seat suddenly and is liable to gouge into the work.

EXAMPLES OF SLOTTER WORK.

33. Stacking Work.—Frequently a number of pieces of the same class are to be finished at once. If these pieces are thin, much time may be saved by piling up a number of them and clamping all to the platen so that the cut may extend across the entire pile. Fig. 20 shows an illustration

of this class of work in which two engine links *a* and *b* have been placed one upon the other and clamped to the slotter table, parallel strips being placed under the work, as shown at *c*, *c*, and the tool set so as to cut both pieces at one time. Care must be taken in setting the parallels to see that they are placed so that the work is supported close to the clamps, thus reducing the tendency to spring. In the piece shown five parallel strips are used and the work is secured by bolts

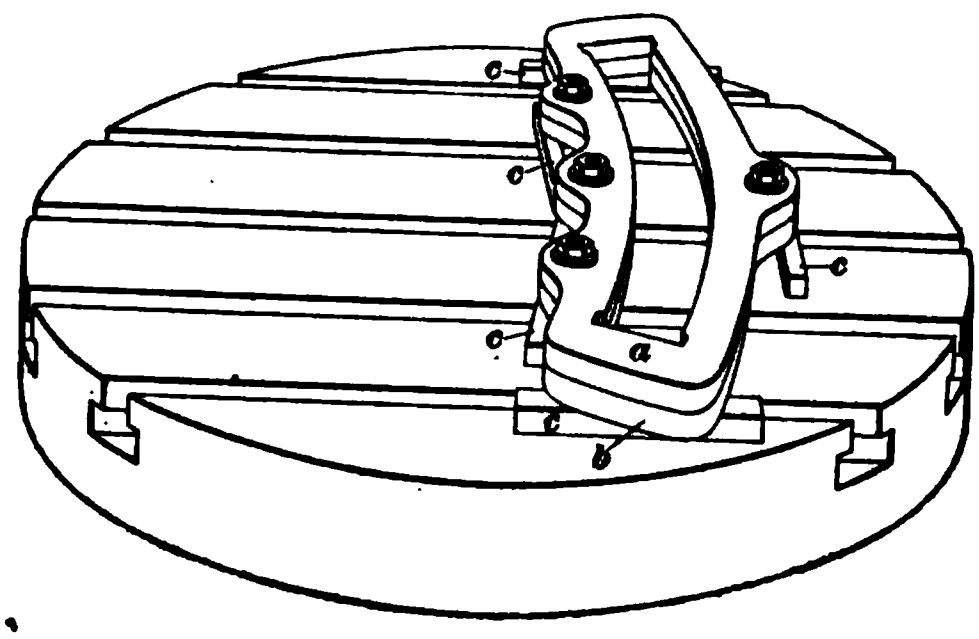

FIG. 20.

through the regular bolt holes of the piece. Frequently the work is secured by means of blocks and clamps. It is possible to pile up as many pieces as the stroke of the machine can accommodate. Locomotive frames and similar pieces are usually finished in this way, and frequently special slotting machines having several heads that can operate on different parts of the frame at the same time are provided for such work as slotting locomotive frames.

34. Taking Two Cuts at Once.—Fig. 21 shows a piece of work clamped to the platen and ready for the cut. The work is a U-shaped forging that is to be finished on its inside surfaces. The curved part of the piece has been bored to a diameter equal to the width between the surfaces when finished. A very heavy slotter bar *b* is used with a blade *a*, which projects at each side. This blade is made the correct length, and with cutting points at each end; when set so that it will just pass through the bored part, it

is correctly set to take the finishing cut, which it does by cutting both surfaces at the same time.

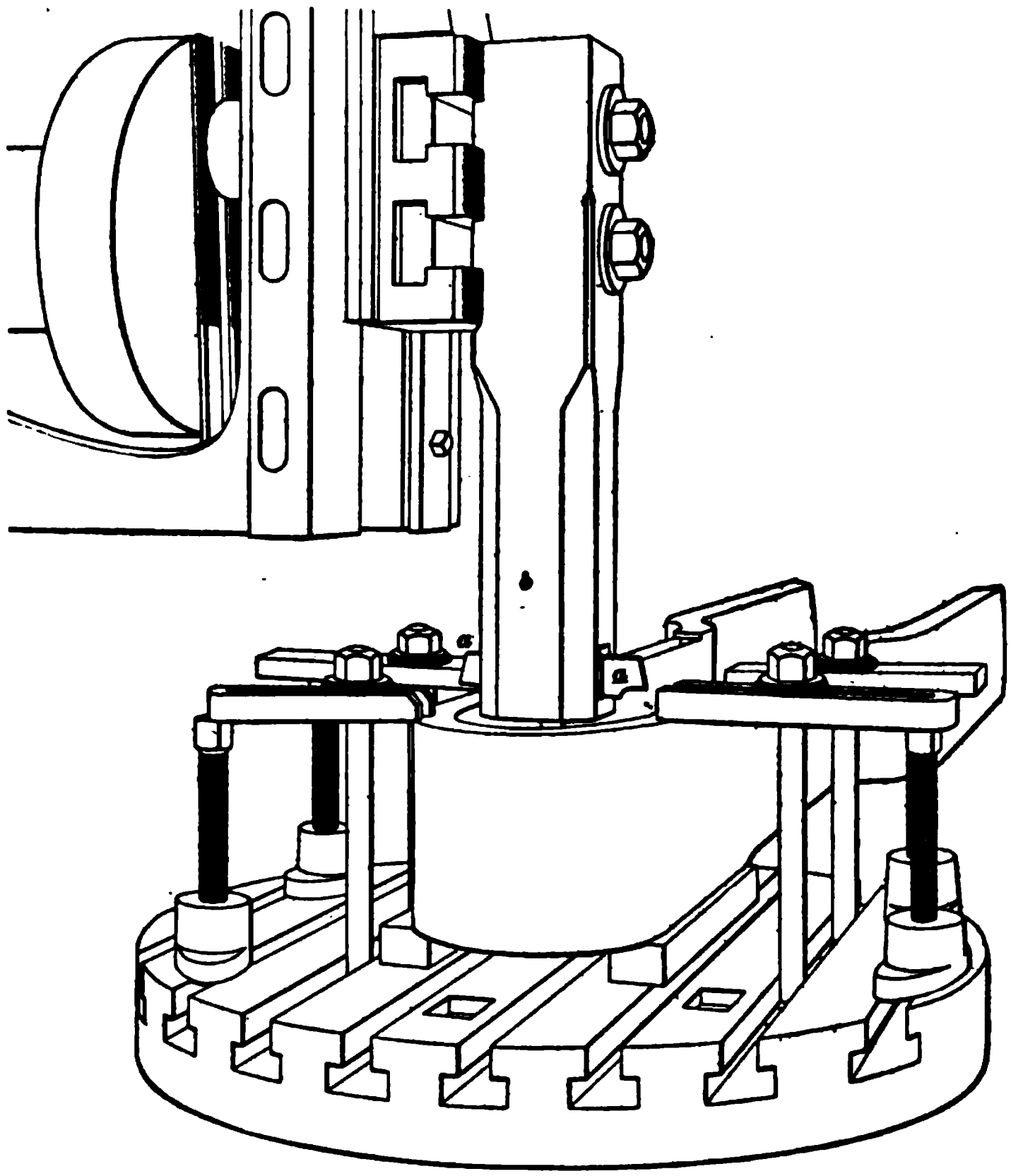

FIG. 21.

35. Gear-Cutting on the Slotter.—The slotting machine is often used for special kinds of work. It is well adapted for cutting internal gears or for cutting very large spur gears.

Fig. 22 shows a part of a slotter and a large internal gear that it is cutting, A part of the gear is shown at *a*. This rests on a plate *c* that has been accurately notched with as many notches in its periphery as there are teeth to be cut in the gear. The plate is fastened to the gear, and is

mounted on the platen of the slotter. Clamps *d*, *d* are fastened to the platen for clamping this index plate and for carrying the stop-pin that holds the index plate in place. A stop *e* with check-nuts on either side is used to regulate the depth of each tooth. The cutter or tool used for this gear is shaped to the correct outline to the teeth. This cutter *f* is carried in a special block fastened to the end of the ram. A similar tool block is shown at *g* and a tool at *h*.

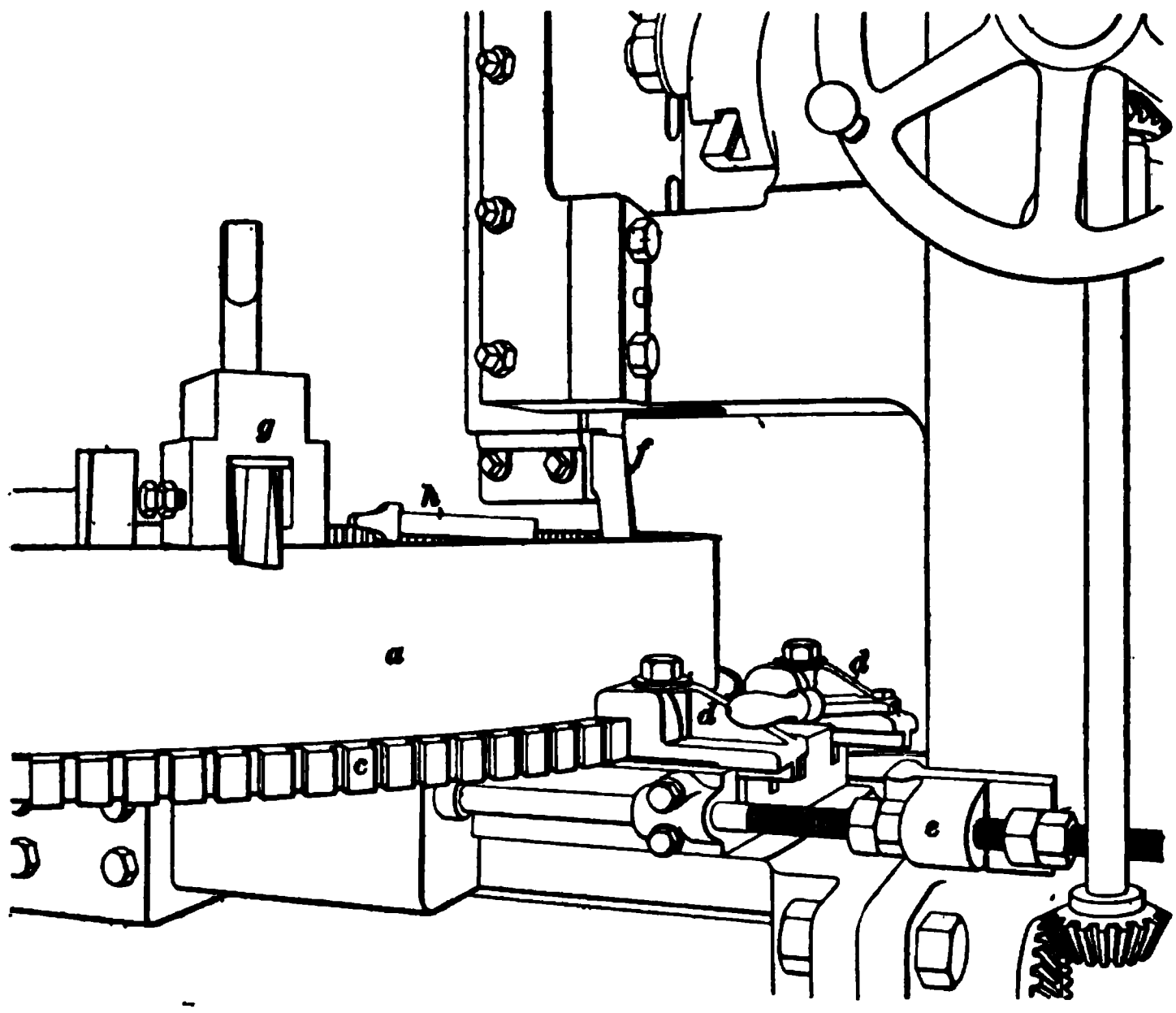

FIG. 22.

As soon as one tooth space is cut, the stop-pin in the clamp *d* is pulled from the index plate and the blank is revolved until the stop-pin will slip into the next notch of the index plate. After clamping, a second notch is cut in the blank, and so on until all the teeth are finished.

Very large gears may be cut in this way when supported properly on bearings away from the platen, so that the edge of the blank rests on the platen and is free to slide on its outer support an amount equal to the depth of the tooth.

The action of the slotter is in so many respects similar to that of the shaper and planer that a thorough understanding of these will enable one in a short time to successfully handle the slotter.

KEYWAY CUTTERS.

36. Description of Keyway Cutter.—Another form of machine similar to the slotter and the draw-cut shaper is the **keyway cutter.** This machine is especially designed for cutting keyways in the hubs of gears, pulleys, or similar pieces.

FIG. 23.

Fig. 23 shows a keyway cutter operating on the hub of a pulley, part of the rim being removed to show the hub.

The cutter bar *a* is operated from beneath by a ram driven by gearing, in a manner similar to that in which a geared shaper is driven. A table *b* supports the work, which is fed automatically against the cutter *c* in the bar. The overhanging arm *d*, which is supported on the column *e*, gives support to the upper end of the cutter bar. The cutter bar is in two parts, which may be screwed together. Fig. 24 shows the parts unscrewed, and also shows the method of clamping the cutter in the bar. The cutter passes through the slot *a* and is clamped by the setscrew *b*. These bars are made in various sizes to accommodate different sizes of work.

Fig. 25 shows a cutter for cutting keyways. The shank *S* fits the cutter bar, while the part *C* does the cutting, the cutting edge being along the line *A B*. These cutter blades are accurately made of different widths for cutting keyways of standard sizes. When sharpened, the sides are not ground, the grinding being done on the bottom face.

FIG. 24.

37. Cutting Racks on a Keyway Cutter.—While the keyway cutter is designed particularly for certain classes of work, it is possible to do a number of other classes of work on the machine. A method of fitting up the machine for cutting racks is illustrated in Fig. 26. A cutter blade that will produce the desired tooth form is used and the rack clamped to the table, as shown in the illustration. The graduated feed-screw *a* is used to space the teeth and the cross feed-screw *b* to set the work for the proper depth of tooth.

FIG. 25.

By the use of specially formed cutters and some special attachments, many kinds of work similar to racks can be done on the keyway cutter.

FIG. 26.

38. Machine Broaching.—In order to work more rapidly, machine broaching is sometimes resorted to. This is practically cutting with a multiple tool head. The machines used for this class are similar to the draw-cut shaper shown in Fig. 9, or the keyway cutter shown in Fig. 23. The broach consists of a number of tools, the cutting edge of each being set slightly in advance of the one in front of it. Sometimes all the teeth are formed on a single piece of steel, when the broach has the appearance of a coarse-toothed saw. The broach is drawn past the work and each tooth takes a cut. The back of the broach bar is firmly supported so that it cannot spring away from the cut. By this device it is possible to cut a keyway with a very few strokes of the machine.

DRILLING AND BORING.

(PART 1.)

DRILLING.

HISTORICAL.

1. Prehistoric Drill.—The principle of drilling holes by means of a revolving tool was known in prehistoric time. The form of machine used was a type of bow drill, which is still found in some smaller manufacturing and repair shops. The primitive drill may still be seen among the Pueblo Indians in the form shown in Fig. 1. A round piece of hard wood *a* is split at the bottom and a piece of flint or iron *b* inserted and bound into place; the point of the drill is formed with scraping edges. The upper end of the stick is pointed and, when drilling, rests against a flat stone or piece of wood *c*, which has a slight depression in it to receive this point. The drill is rotated by means of a bow, the string of which is given a single turn around the stick, as shown. To operate the drill, the piece *c* is held in one hand, thus furnishing the

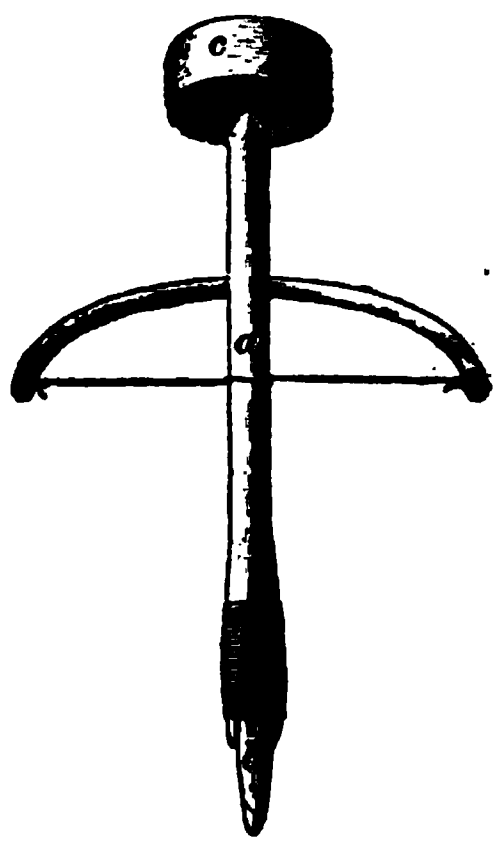

FIG. 1.

For notice of copyright, see page immediately following the title page.

necessary pressure and giving the proper direction, while, with the other hand, the bow is drawn back and forth, rotating the drill alternately in opposite directions. This instrument, in hands that are skilled in its use, has produced marvelous results. Beads, shells, etc. are drilled in a manner that produces the highest admiration for these primitive workmen.

DEVELOPMENT FROM THE LATHE.

2. Prehistoric Lathe.—The modern machine-shop drill has its origin in the **lathe,** from which all other forms of machine tools have been developed.

The lathe, in a very primitive form, was known in prehistoric time. Its earliest form consisted of a piece of wood supported horizontally upon two wooden pillars and rotated by means of a string. The material to be worked was attached to this revolving part, which moved in opposite directions as the string was wound or unwound. As the tool could cut only while the work was running in one direction, it had to be withdrawn and brought up alternately as the direction of motion changed.

3. Development of Modern Drill.—While the principle of the lathe is very old, it was not until a comparatively recent date that power was applied to it, and the modern shop tool, which rotates continuously in one direction, was developed. It was some time after the power lathe had made its appearance that the drilling machine was brought into use.

The step from the lathe to the drilling machine was simply a change in the arrangement of the head. In the lathe, the piece to be worked is usually rotated with the spindle, while the cutting is done with a fixed tool. In boring holes, the tool may be rotated with the spindle, while the part to be drilled is pressed against it. When used in this way, the lathe is a drilling machine with a horizontal spindle, and the only difference between the lathe when

thus used and the ordinary drilling machine is that, in the latter, the spindle stands in a vertical position and the work is supported upon a horizontal table.

ESSENTIAL PARTS OF DRILLING MACHINES.

4. Essential Parts.—The modern drilling machine consists of a revolving spindle to which a device for holding the tool is attached, a table upon which the work is supported, and a device for feeding the tool into the material to be drilled.

5. Arrangement of Parts.—The arrangement of these parts is shown in Fig. 2. In this simple drilling machine, the spindle *a* is held in a vertical position by a frame *b* and column *c*. The spindle is rotated by means of a belt running on a pulley *d*, which is connected to the upper end of the spindle by means of a spline. The pulley is held vertically between the two arms *e* and *f*, thus permitting the spindle to slide in the pulley while turning. The tool *h* is held in a chuck or socket *g* on the lower end of the spindle and moves vertically and rotates with the spindle. The part to be drilled is held upon the table *i*.

FIG. 2.

The principal parts of the drilling machine have been mentioned, but it is still necessary to devise some means for feeding the tool through the material. This is usually done by lowering the tool as it cuts its way; although, as will be seen later, in a few cases the table is raised while

the tool is held in a fixed position. Fig. 2 shows a very simple method by which the spindle may be raised or lowered by means of a hand lever. The spindle is made to revolve in a sleeve *j* and is held vertically in it by means of the collars *k* and *l*, which are fixed to the spindle. The sleeve has a rack *m* upon its outer side, which engages with a pinion upon the inner end of the shaft *n*. This shaft has its bearing in the lower arm of the frame *b*, and carries upon its outer end a hand lever *o*. The sleeve is free to move in a vertical direction as the pinion is turned by means of the lever, but it is kept from rotating by the rack. The spindle is lowered by moving the lever in the direction of the arrow *p*, thus rotating the pinion and carrying down the rack with which it engages.

The machine receives its power from a belt running from the pulley *d* over a pair of idlers *q* to the pulley *r*. Attached to *r* is another pulley *s*, which is belted to a countershaft. Every part of a drilling machine should be as rigid as possible, as a very slight spring in any of the parts causes inaccuracies in the work.

PRINCIPAL FUNCTIONS OF DRILLING MACHINES.

6. Purpose of Drilling Machines.—The **drilling machine** was brought into use primarily for the purpose of sinking circular holes into a solid body, which is called **drilling**; but with its development it has been found that it can be used advantageously for other operations, such as *reaming*, *countersinking*, *counterboring*, *spot facing*, *tapping*, *center drilling*, etc.

7. Causes of Irregularity in Drilled Holes.—The varying hardness of the metal, blow holes in castings, and slight imperfections in the formation of the tool tend to make a drilled hole imperfect. Sometimes the hole is not quite straight, or it may not be quite round, or the surface may be rough.

8. Reaming. — In order to overcome these defects where absolute accuracy is necessary, another tool, called a **reamer,** is passed through the hole. This operation is known as **reaming.**

9. Countersinking.—In other cases, it is necessary to enlarge the upper end of the hole, as shown in Fig. 3 (*a*). This is known as **countersinking.**

FIG. 3.

10. Counterboring.—When the sides of the enlarged hole are carried down straight and a shoulder is formed at the bottom, as shown in Fig. 3 (*b*), the operation is called **counterboring.**

11. Spot Facing.—When it is necessary to finish a body of metal only a small distance about a drilled hole, to form a smooth surface for the head or nut of a bolt, or a bearing

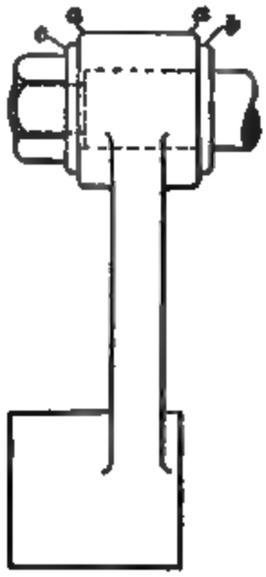

FIG. 4 FIG. 5.

for the hub of an adjacent part, it is called **spot facing,** as, for instance, the bearings for the nuts *a*, *a* on the cylinder head, Fig. 4, are produced by facing the spots *b*, *b*.

12. Facing.—When the ends of hubs are finished with a revolving cutter, it is simply called **facing**, as, for instance, in the case of the rocker-arm in Fig. 5, where the surfaces *a*, *a* are faced to receive the pin *b* and washer *c*.

13. Tapping.—When internal screw threads are cut in a piece of metal, the operation is called **tapping**. The hardened-steel screw, which is grooved or fluted longi-

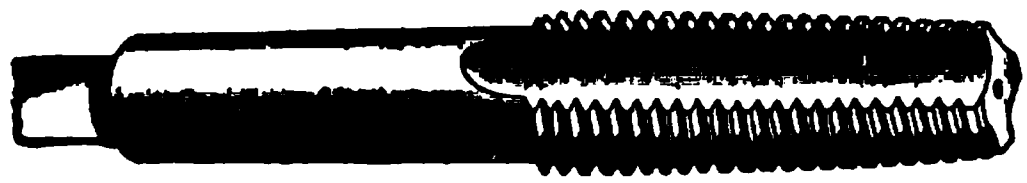

FIG. 6.

tudinally, as shown in Fig. 6, and with which the thread is formed, is called a **tap**.

14. Center Drilling.—When a center in a piece of lathe work is formed with a drill and reamer, it is called **center drilling**.

FORMS OF TOOLS AND THEIR USES.

DRILLING TOOLS.

15. Classes of Drills.—The drill, which is one of the most largely used tools found in a machine shop, is made in a number of forms, which may be classified under the two heads *flat drills* and *twist drills*.

16. Common Characteristics.—These different forms have three essential characteristics that are common to all. *First*, there must be one or more cutting edges that separate the small particles of material from the body either by scraping or cutting. *Second*, there must be a central leading point about which the cutting edges revolve and which guides the drill through the material. This is obtained by tapering the cutting edges toward the center,

as shown in Fig. 7. The angle *a* of this taper varies for different classes of work, but for ordinary drilling it is made between 50° and 60°. The Morse Twist Drill Company recommends 59°, while Wm. Sellers & Co. recommend 52°. *Third*, there must be a clearance back of the cutting edge. Fig. 8 represents the point of a flat drill, in which *b* is the *clearance angle*, sometimes called the *angle of relief*. This angle should

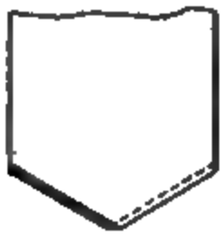

FIG. 7.

FIG. 8.

be large enough so that the stock back of the cutting edge will clear at all times.

17. Early Form of Drill.—The earliest form of machine-shop drill consisted of a flat piece of steel drawn down

FIG. 9.

FIG. 10.

flat at one end, as shown in Fig. 9, and ground to the desired shape. This class of drill is still largely used in various forms and is known as the **flat drill.**

18. Double Scraping Edge.—The form used in the bow drill is shaped as shown in Fig. 10. The edges are beveled on both sides, thus permitting the drill to be rotated in either direction while both edges cut equally well. This form is still used by watchmakers for drilling small holes with a drill that runs backwards and forwards alternately. One great objection to this drill lies in the shape of the cutting edges and the corners at the outer end of the cutting edges. The metal is removed by scraping rather than by cutting, and a heavy pressure is required to make it work satisfactorily. These conditions wear the scraping edges so that frequent grinding is necessary, and every time the tool is ground, the width across the flat part is reduced, thus reducing the diameter of the hole it will drill. This difficulty may be overcome by making the sides parallel for a short distance above the outer corners, as shown in Fig. 11. The parallel sides also form guides for the drill, thus insuring a straighter and better hole.

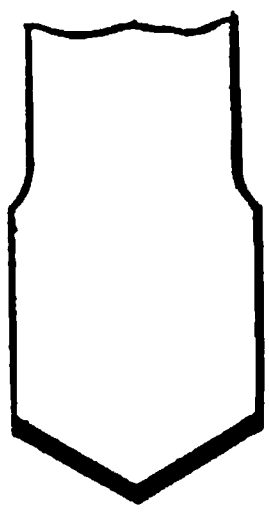

FIG. 11.

19. Single Cutting Edge.—Another form of drill that may be revolved in either direction is shown in Fig. 12. It is made from a round bar by grinding one end to a cone of the required taper and grinding away one side to the center line, as shown. This drill has the disadvantage of cutting on only one edge at a time, but the angle of the edge is such that it cuts more freely than the scraping edges. The parallel sides guide the drill very accurately and a fairly straight and round hole of the same diameter is formed, no matter how often the drill may be ground. These two types of drills, however, are seldom used in the modern machine shop, as other types that will cut when revolving in only one direction have been found more efficient.

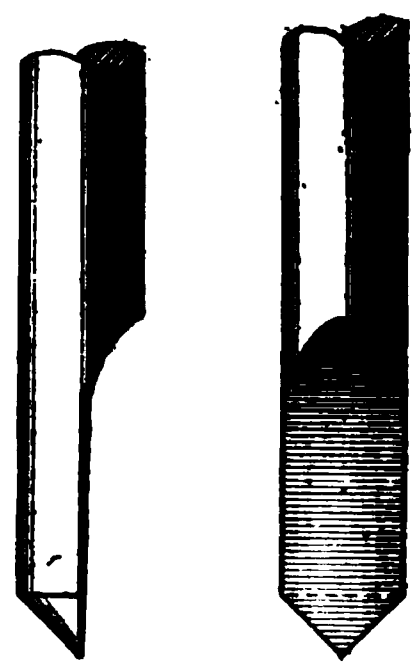

FIG. 12.

MACHINE-SHOP DRILLS.

FLAT DRILLS.

20. Form of Drill Point.—The simplest and most cheaply made machine-shop drill is the ordinary **flat drill** shown in Fig. 13. When rightly formed, this type of drill does very excellent work. It is, however, a hand-made tool and is often so poorly formed and so imperfectly ground that its work is not satisfactory.

In order that a drill may cut equally on both sides and form a smooth, round hole, the point must be in the center, the cutting edges must make equal angles with the center line, and must be of the same length and have equal clearance angles.

21. Results of Improperly Formed Drills.—All these requirements must be carefully observed. It is not sufficient to have the point in the center of the drill, because different angles of the cutting edges will cause the drill to cut on one side only, as shown in Fig. 14 (*a*), thus throwing twice the intended depth of cut upon the one cutting edge. It also causes a crowding against one side, and a tendency to throw the center of the drill out of its correct position. The angles which the cutting edges make with the center line may be equal, but if the lengths of the cutting edges are not equal, it will result in the condition shown in Fig. 14 (*b*). The hole will be larger than the drill, and the outer end of the long side of the cutting edge must do double duty, which soon dulls it, causes crowding, and makes a rough hole.

FIG. 13.

When both the angles with the center line and the lengths of the cutting edges are unequal, the hole will be larger

than the drill, and the effect will be as shown in Fig. 14 (*c*). All the work will be done by the short side and the outer end of the long side. Unequal clearance angles will cause one side to cut more freely than the other, thus distributing the work unequally. Under a given pressure, the side with

(a) (b) (c)

FIG. 14.

the greater clearance angle tends to take a deeper cut than the other, while there is less metal to support its cutting edge. This edge wears away more rapidly than the other, resulting in unsatisfactory working conditions.

22. Symmetrical Cutting End.—*The cutting end of a drill must be symmetrical in every respect* in order to do accurate work. It should also be as thin at the point as the material to be drilled and the size of the drill will permit. A careful examination of flat-drill points will show that the cutting edges *a b* and *c d*, Fig. 15, stand on opposite sides of the center line. When the clearance angles are equal, the two planes representing the clearance angles will intersect in the line *b d* perpendicular to the axis of the drill.

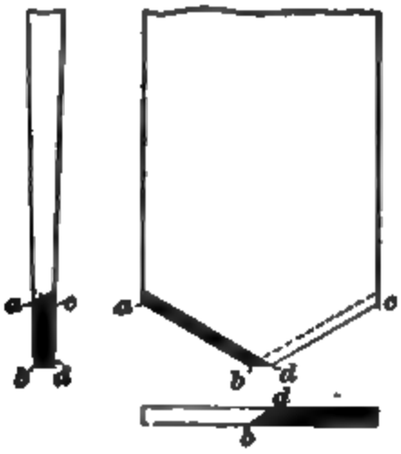

FIG. 15.

23. Advantages of Thin Point.—It will readily be seen that the cutting edges extend only to *b* and *d*, and between these two points the edge has equal clearance on both sides, producing an edge resembling that of a cold chisel. When rotated, it is simply a scraping edge, and the pressure required to force it through the metal at the rate at which the drill should cut is very great compared with the pressure required upon the cutting edges proper. This scraping edge also wears away very quickly, which necessitates additional pressure. It becomes evident, then, that, in order to do the work with the least loss of power, the scraping edge *b d* must be made as short as possible. This is accomplished when the point is made very thin.

On the other hand, when it is made too thin, the cutting edges are not supported sufficiently well, and break away, making frequent dressing and grinding necessary. No definite rule for the thickness of the point can be given, since it depends largely on the grade of steel used in the tool and the quality of the material to be drilled. Experience and care in observing the action of the drill and the working conditions alone will enable one to determine the correct thickness.

24. Grooved Drill Point.—Sometimes grooves are formed in the end of the drill, as shown in Fig. 16, thus providing curved cutting edges, which, when properly shaped, remove almost entirely the scraping edges. This practice, however, tends to weaken the inner ends of the cutting edges by removing the supporting metal, and it is generally thought to be better simply to make the end of the drill as thin as practicable.

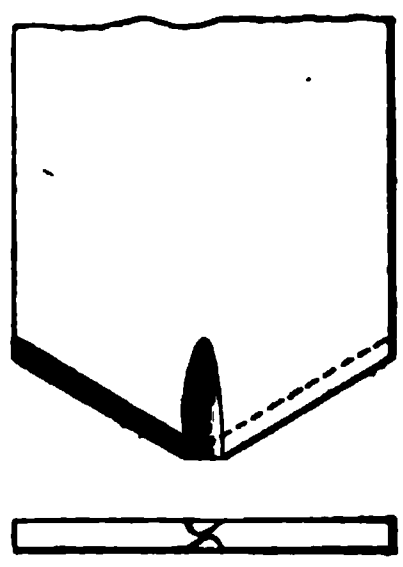

FIG. 16.

25. Parallel Sides.—Flat drills, to give the best results, should have the sides *a b*, Fig. 17 (*a*), parallel, ½ inch or more above the cutting edges. This parallel portion should be rounded to fit the circumference of the hole. Drills are often used

with the corners projecting beyond the body, as shown in Fig. 17 (*b*), and with the sides beveled, as shown in Fig. 17 (*c*). Drills formed in this way make ragged holes, and when there are soft or hard spots or blow holes in the material drilled, they run off to one side, making holes that are neither straight, round, nor smooth. The simple precaution of making the sides parallel for a short distance and rounding the edges to fit the desired hole, as shown in Fig. 17 (*a*), will, when the point is rightly formed, obviate this difficulty almost entirely.

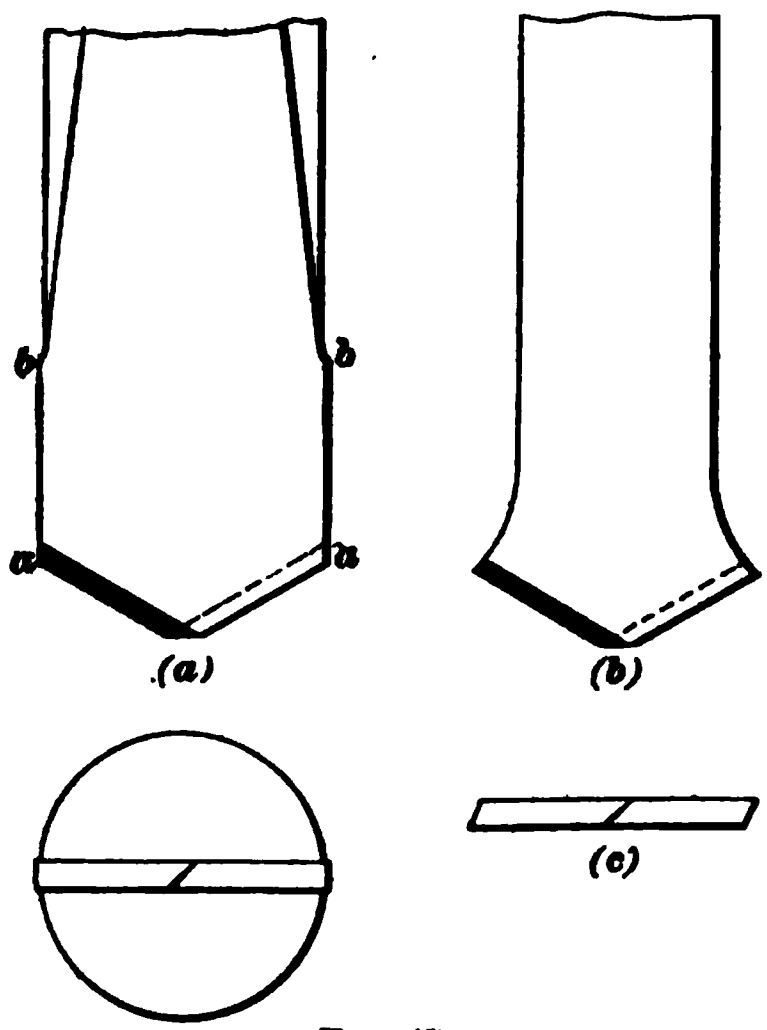

FIG. 17.

26. Drill Shank.—The portion of the drill between the flattened part and the upper end is called the **shank.** It should be somewhat smaller than the hole, in order to work freely in it. In the case of comparatively shallow holes, the flat part should extend to a point high enough so that the cuttings or chips can work out. The shank should be round. The corners of any angular section draw the chips under them and clog the drill. Even with a round shank and a perfectly formed drill, there will be more or less clogging in a deep hole, and it is often necessary to back out the drill and remove the cuttings.

27. Lipped Drills.—In the kind of drill just considered, the front of the cutting edge is either perpendicular to the direction of travel, as shown in Fig. 18 (*a*), or, if the drill is tapered toward the point, it may have a slight negative front rake, as shown in Fig. 18 (*b*). In order to gain the advantage of a better cutting edge, a groove is

sometimes ground above the cutting edge, as shown in Fig. 19 (*a*). A section through *c d* is shown in Fig. 19 (*b*).

The same end may be accomplished by dressing the drill with the cutting edge lipped, as shown in Fig. 19 (*c*). Fig. 19 (*d*) shows a section through *e f*. In both of these cases, care must be taken to leave enough metal back of the cutting edge to withstand the cutting strain.

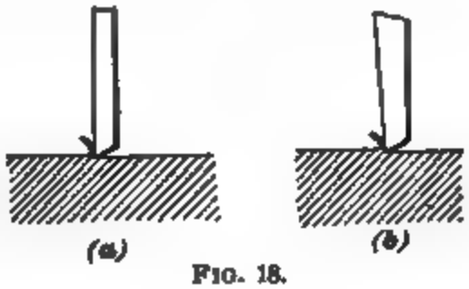

FIG. 18.

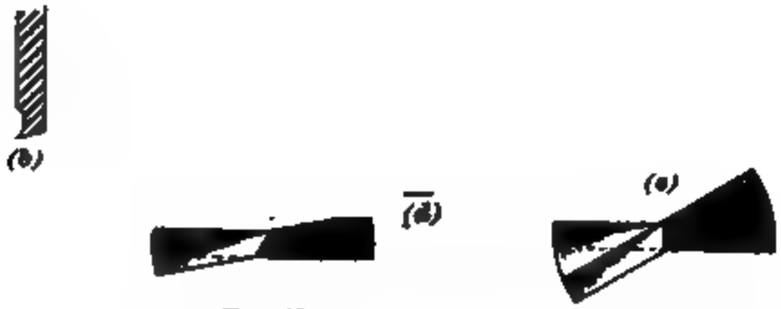

FIG. 19.

28. Twisted Flat Drills.—One disadvantage in these drills is that grinding reduces the lip, and necessitates frequent dressing. This objection may be overcome by twisting the end of the drill into a spiral, as shown in Fig. 19 (*e*). In this way, the same angles of the cutting edges may be obtained, while the shape is not altered by grinding, until the entire spiral is ground away. The spiral also assists in carrying the cuttings away from the drill point.

TWIST DRILLS.

29. Commercial Twist Drills.—The fact that a spiral drill requires no dressing and removes its cuttings has led to an almost universal use of the **twist drill,** as the **commercial spiral drill** is called. Fig. 20 (*a*)

illustrates an ordinary commercial drill of this type. It is made from round stock, the spiral flutes being cut with a milling cutter. The surface between the flutes is backed off slightly from near the cutting edges *a*, *a*, Fig. 21 (*a*), to the backs *b*, *b* of the other flutes, leaving only narrow strips *a c* the full diameter of the drill. This is done to reduce the bearing surface on the side of the hole, while enough surface is left to form a perfect guide, owing to the fact that the bearing *a c* runs in a spiral around the drill.

FIG. 20.

In some drills a narrow bearing strip is left, as shown in Fig. 20 (*b*), the clearance being cut away, concentric with the bearing surface, as illustrated in Fig. 21 (*b*). Twist drills are manufactured in such a large variety of sizes, are found so efficient, and can be bought at such a small cost that they are rarely made in the tool room.

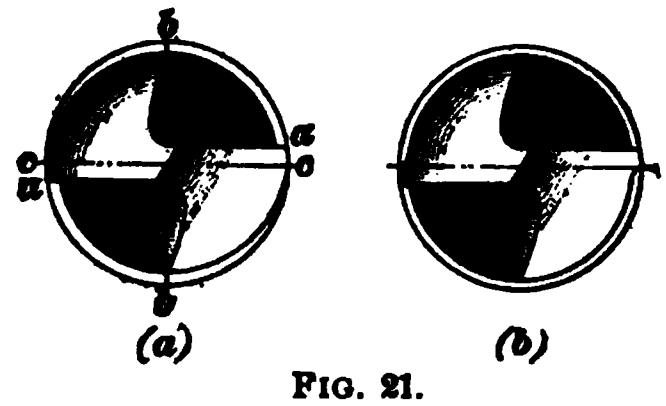

FIG. 21.

30. Precautions in Grinding.—The irregularities that arise from imperfect grinding, which have been mentioned in connection with the treatment of the cutting edges of flat drills, are applicable to the twist drill as well. The dangers suggested are, however, almost entirely overcome by the use of special grinding machines.

STRAIGHT-FLUTED DRILLS.

31. A **straight-fluted drill** has been found very serviceable for drilling thin plates and brass. With a twist drill there is a tendency to plunge forwards as the drill

comes through the plate. This is overcome by having a drill formed like the twist drill, but with straight instead of spiral flutes, as shown in Fig. 22.

SLOT AND TEAT DRILLS.

32. Forms of Slot Drills.—In drilling machines where a feed perpendicular to the center line of the spindle may be secured, **slot,** or **keyway,** drills are often used. These are made in a number of different forms. In Fig. 23, (*a*), (*b*), (*c*), and (*d*) show four different kinds, all of which are quite satisfactory in metal of uniform hardness.

33. Advantages of Some Forms.—In sinking these drills into the metal, holes are formed as shown in Fig. 23 (*e*), (*f*), (*g*), and (*h*). The central cores in Fig. 23 (*e*) and (*f*) form guides for the drill, which, in metal of varying hardness, have been found of great advantage.

Slot drills are used largely in forming keyways, or slots, in shafts. They are sunk into the metal a sufficient depth for a longitudinal cut and are then fed

FIG. 22.

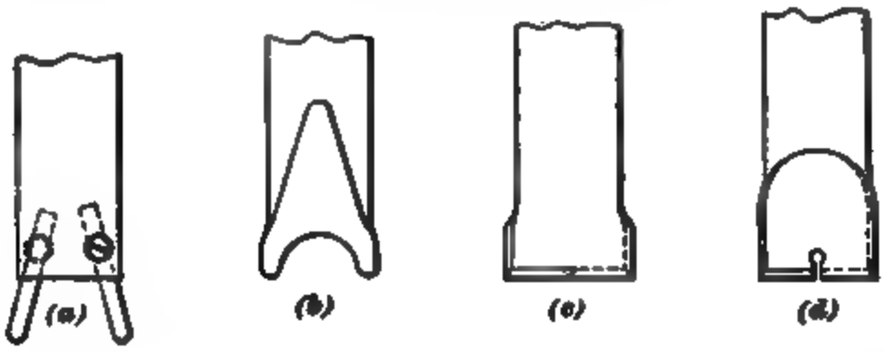

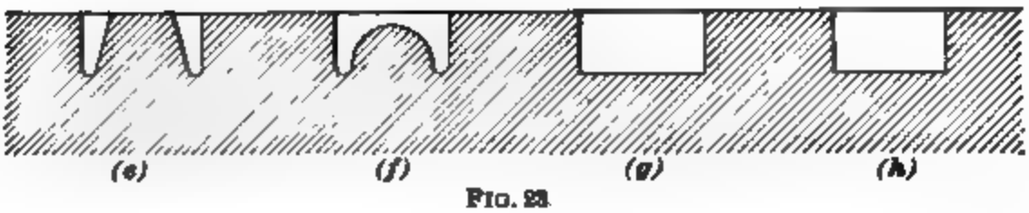

FIG. 23.

lengthwise along the shaft, thus cutting out the metal to

this depth throughout the entire length of the slot. The drill is then lowered enough to furnish another longitudinal cut and the operation is repeated until the required depth is obtained.

34. Teat Drills.—The drills shown in Fig. 23 (*c*) and (*d*) may be used in squaring the bottoms of holes made by an ordinary twist drill at the ends of keyways to be planed or chipped. The **teat drill,** shown in Fig. 24, is used for this same purpose, but may be used for drilling the entire depth of the holes required. The teat *a* is ground to a point, being tapered in both directions, and acts as a guiding point for the drill. The cutting edges are of the same form as those shown in Fig. 23 (*c*) and (*d*).

FIG. 24.

ANNULAR CUTTERS.

35. Single Tool.—An **annular cutter** that is used very generally for removing large bodies of metal and cutting large holes in boiler plates, rod ends, etc. is shown in

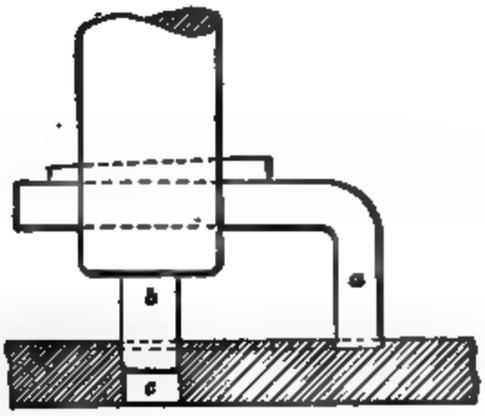

FIG. 25.

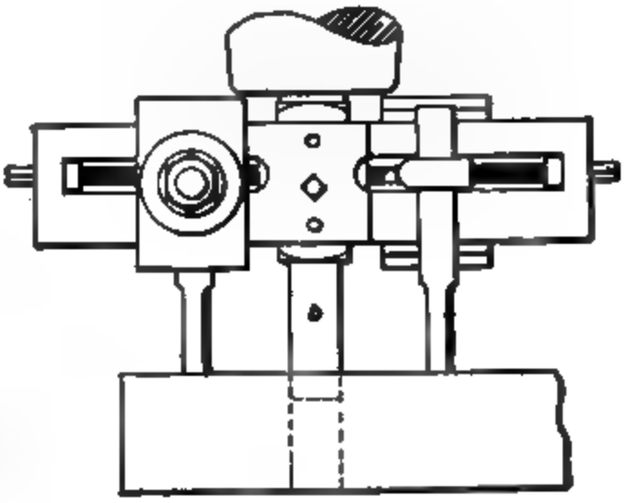

FIG. 26.

Fig. 25. The tool *a* is practically a cutting-off tool, with the proper side rake to clear the circular sides of the hole. A hole *c* is first drilled for the guide pin *b*, after which the stock around the hole *c* is removed as a washer with a hole in the center.

36. Double Tool.—Sometimes two tools are used, one on each side of the center, as shown in Fig. 26. This balances the side thrust upon the center pin *b* and reduces it to a minimum, besides doubling the capacity of the tool.

37. Spring Center.—In light work, such as cutting holes in boiler plates, the necessity of drilling the center hole may be avoided by using a tool like the one shown in Fig. 27. The center pin rests in a punch mark, thus forming a guide for starting the cutting tools, while a spring that acts upon the end of the pin permits it to recede as the tool travels through the plate. This device operates very nicely in comparatively small holes in light plates, but for large holes or very heavy stock a solid center pin, running in a drilled hole, is necessary.

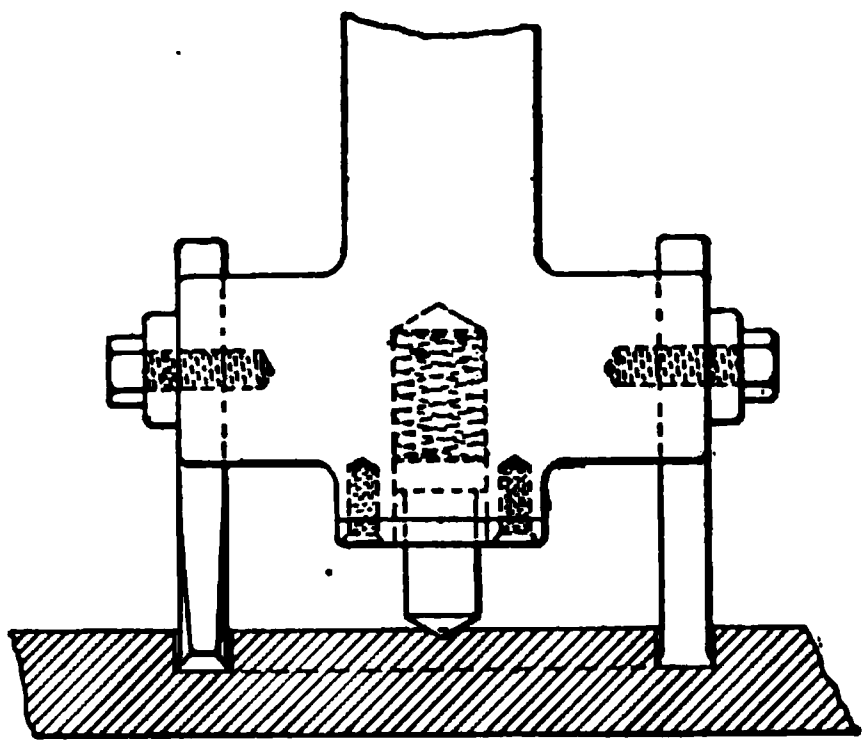

FIG. 27.

DRILL SHANKS.

38. Straight Shank.—On ordinary flat drills, the shanks shown in Fig. 28 (*a*) and (*b*) are most commonly used. In Fig. 28 (*a*) the shank is straight and slightly flattened at *a* in order to furnish a good bearing for the setscrew. The end of the screw often cuts a burr at the bearing point, which prevents the easy removal of the drill, and to avoid this the shank may be turned down slightly at the bearing

point of the screw, as shown at *a*, Fig. 28 (*b*). The shoulder also prevents the tool from dropping out of the socket when the screw becomes slightly loose.

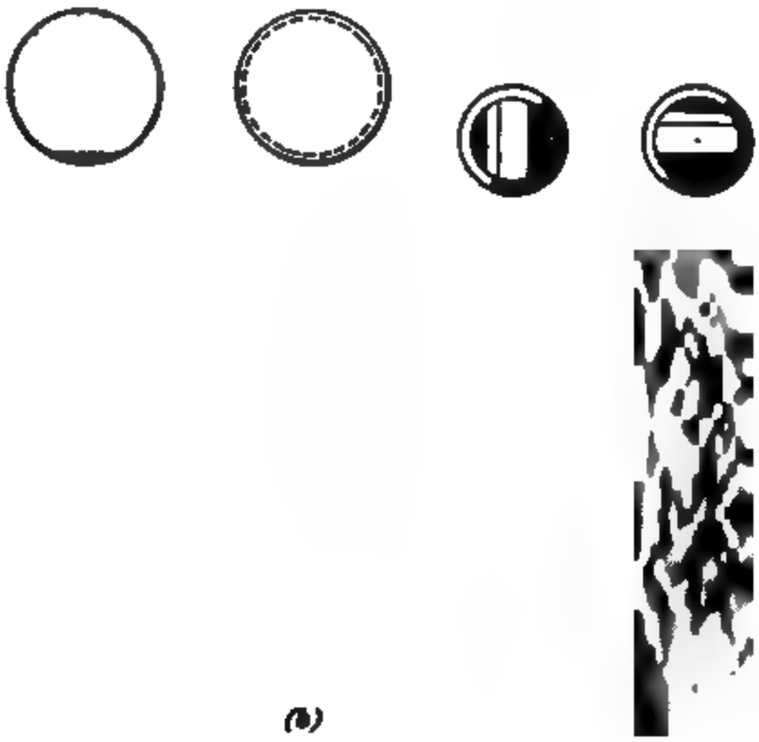

(b)

FIG. 28.

39. Taper Shank.—Fig. 28 (*c*) and (*d*) shows the shank tapered. The taper is so made that it will hold the drill from dropping out of the socket, while the flat end, or *tang*, at the top, which fits into the hole in the socket, prevents the drill from turning in the socket. There are several tapers used by different makers of drills. The Morse Twist Drill Company uses a taper of about ⅝ inch to the foot. Some makers have a key inserted in the socket to assist the tang in preventing the drill from turning. This calls for a corresponding keyway in the drill as shown at *a*, Fig. 28 (*d*).

LUBRICATION OF DRILLS.

40. Requirements.—Cast iron and brass are drilled without lubricating the drill point; in fact, in cast iron a lubricant causes the fine cuttings to cake and choke the

drill. In drilling wrought iron and steel, on the other hand, the drill point should be thoroughly lubricated.

41. Application of Lubricants.—The lubricant is usually applied by dropping it into the hole and permitting it to run down along the sides of the hole and the drill. This method has been found rather unsatisfactory, as the cuttings, in working their way to the surface, tend to carry the lubricant up, and in some cases very little, if any, reaches the drill point where it is most needed.

Fig. 29 (*a*) shows a very simple method by means of which better lubricating conditions are obtained. Two spiral grooves *a*, *a* are cut parallel with the flutes *b*, *b*, thus forming separate channels for the lubricant. There is some danger of these grooves becoming clogged by fine particles that work around the drill, and small brass tubes are brazed into the grooves as shown, in order to insure an unobstructed flow. Fig. 29 (*b*) shows a drill with holes running through the solid metal.

(*a*) (*b*)
FIG. 29.

42. Provision for Supplying Lubricants.—The lubricants may be carried to the holes in the drill through the chuck or through a small attachment placed just below the chuck. Fig. 30 illustrates an attachment that is frequently used. A collar *a* is fitted to

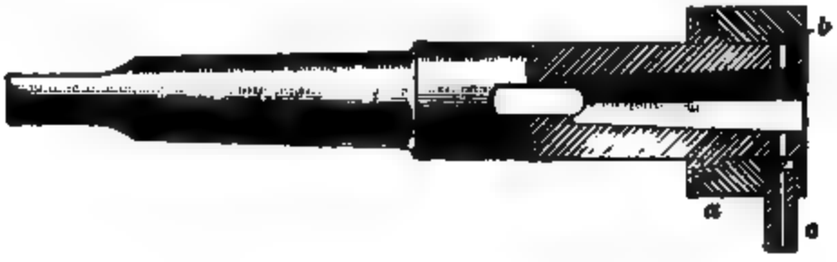

FIG. 30.

the lower end of the drill socket, as shown, and is kept from

revolving with the spindle by means of a pipe that rests against the column of the machine and through which the oil is conveyed to the collar. Inside of the collar, and immediately over a pair of holes in the socket that correspond to the upper holes in the drill, a circular groove *b* is turned, thus forming a connection between the outer pipe *c* and the drill. The oil is supplied by means of an oil pump, under sufficient pressure to insure a steady flow to the drill point, and is carried to the attachment by means of a flexible tube.

REAMERS.

43. Purpose of Reamers.—Drilled holes are rarely formed perfectly round or straight, and with each grinding of the drill, especially when the grinding is done by hand, the diameter is liable to vary slightly. It is therefore necessary, in work where accuracy is required, to true the hole. This is done by passing a tool called a **reamer** through it.

44. Flat Reamers.—Reamers are made in various forms. The simplest of these consists of a flat piece of steel turned accurately to the diameter of the hole, with the cutting edges shaped much like those of the ordinary twist drill, but with a greater angle between the cutting edges. Fig. 31 illustrates this type. It is used frequently because of its cheapness, but despite its cheapness it is not an economical tool, as it does not produce a hole of sufficient accuracy for the better grades of machine work.

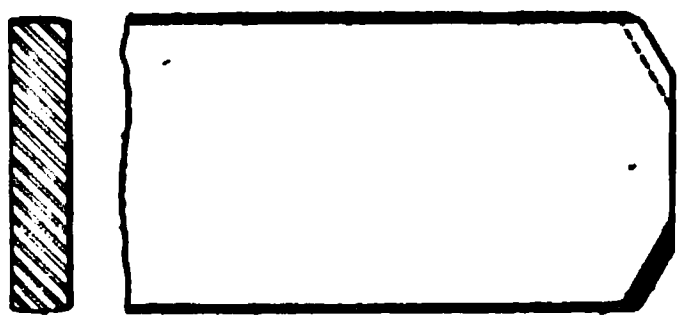

FIG. 31.

45. Fluted Reamers.—A better type of reamer is shown in Fig. 32. It consists of a piece of round steel with flutes cut lengthwise. For the general run of work, the

flutes are so shaped that the cutting faces lie in radial planes, as shown in Fig. 33 (*a*).

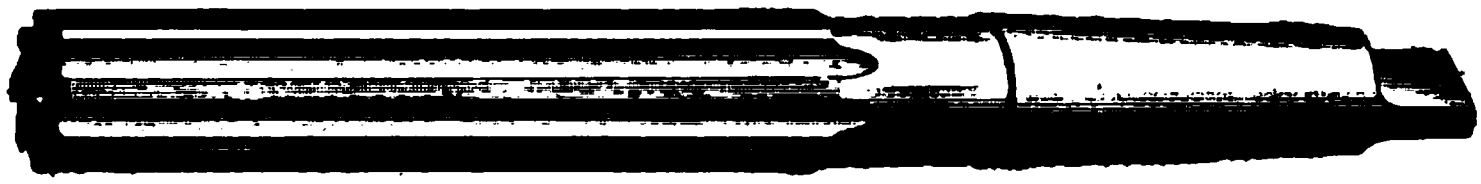

FIG. 32.

46. Undercut Faces.—Fluted reamers are sometimes made with the cutting faces cut under, as shown in Fig. 33 (*b*). This is not right, as the slightest spring causes the cutting edges to run more deeply into the metal, resulting in an injured or enlarged hole, and sometimes in a broken reamer.

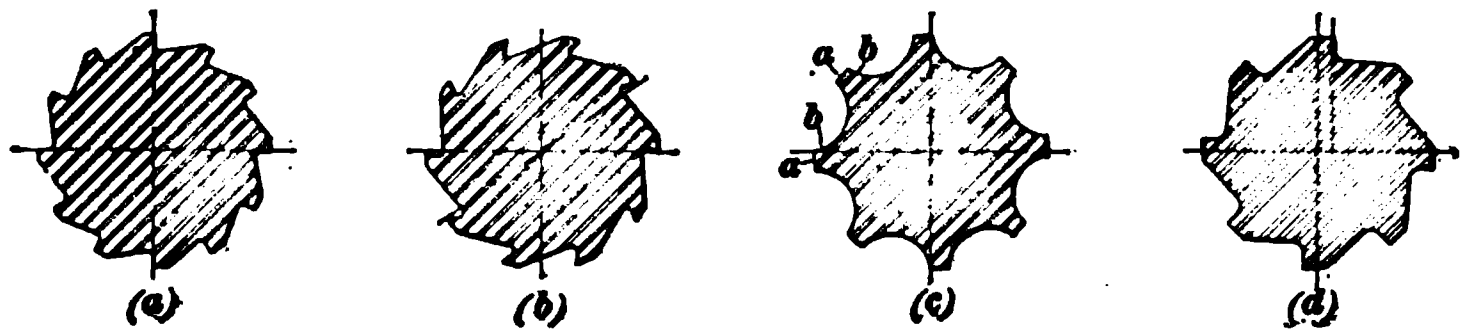

FIG. 33.

47. Curved Cutting Faces.—Reamers with **curved cutting faces** *a*, *b*, illustrated in Fig. 33 (*c*), are objectionable, as they have a negative front rake that is increased by grinding.

48. Brass Reamer.—Fig. 33 (*d*) illustrates a reamer that is used for brass when a sufficiently large amount of work is to be done to warrant the expense of a special reamer. The faces, in sizes of about $\frac{5}{8}$ inch to 1 inch in diameter, are set forwards from the radial line about $\frac{1}{16}$ inch, and are made parallel to it, thus giving a negative front rake. For larger sizes, the faces are set forwards a corresponding amount.

49. Number of Cutting Edges.—A reamer should always have enough cutting edges to guide itself in a straight line through the hole. There should never be less than four, and where the diameter is large enough to make it practicable there should be more. The number of edges

should be even and not odd, as this makes it possible to caliper the reamer.

50. Rounded or Tapered Ends.—The ends of the cutting edges should be rounded slightly, as shown at *a*, Fig. 34. This creates a tendency for the reamer to keep working toward the center of the hole. This same advantage is secured by making the lower end with a slight taper, $\frac{1}{8}$ inch or more long, as shown at *a b*, Fig. 35.

51. Depth of Cut.—In all classes of reaming, the holes should be drilled as nearly to the finished size as possible, so that the reamer need take only a light finishing cut. This preserves the edges, avoids frequent grinding, and lengthens the life of the reamer. An allowance of $\frac{1}{64}$ inch of stock is sufficient for the reamer in holes having a diameter of 1 inch or less, while in holes having diameters between 1 and 2 inches, $\frac{1}{32}$ inch is enough. For sizes above 2 inches in diameter it is usually considered best to finish the hole with a boring bar and cutter, except in cases where the hole passes through

Fig. 34.

Fig. 35.

two adjoining parts. In such cases, a long reamer may be used for finishing. Holes above 2 inches are sometimes finished with large shell reamers.

TAPER REAMERS.

52. Solid Taper Reamers. — Tapered holes for dowel pins and various other purposes have brought **taper reamers** into very general use. They are fluted and made

like a straight reamer, except that the sides are tapered. Fig. 36 (*a*) illustrates a reamer of this type.

(*a*)

(*b*)

FIG. 36.

53. Heavy Duty of Taper Reamer.—The duty of a taper reamer is heavier than that of a straight reamer, since it must remove a larger body of metal. The drilled hole is straight and must be a little smaller than the small end of the reamed hole. The amount of metal that must be removed is represented by the part *a c b* in Fig. 37, and depends on the taper required.

54. Roughing Reamer.—Where the taper is great, a **roughing reamer,** Fig. 36 (*b*), is first used to remove the excess of metal. This is followed by a finishing reamer,

FIG. 37. FIG. 38.

Fig. 36 (*a*), which should take only a very light finishing cut. In some shops, it is customary to relieve the reamer in heavy work by counterboring steps, as shown in Fig. 38. This is a rather dangerous proceeding, as the cutting edges

of the reamer are liable to be injured. It is also a great waste of time. By the use of the step reamer shown in Fig. 39, the metal can be removed more easily and rapidly than with a drill. The small end *a* of this reamer is made the size of the drilled hole. The edges *b*, *c*, *d*, and *e* are the lower ends of the steps and form the cutting edges. The diameters are made from $\frac{2}{1000}$ inch to $\frac{3}{1000}$ inch less at the top of each step than at the bottom, to provide for clearance and to insure the free operation of the tool. There is also clearance on the bottom, as shown at *f*, *g*. This reamer should be followed by the roughing reamer shown in Fig. 36 (*b*) to remove the steps and the coarse tool marks, and to enlarge the hole so that it can be finished with the reamer shown in Fig. 36 (*a*). In holes of very slight taper, the roughing reamer is not generally used, but even here, when a large number of holes are to be reamed, it is advisable to use it, as it preserves the cutting edges and the accuracy of the finishing reamer.

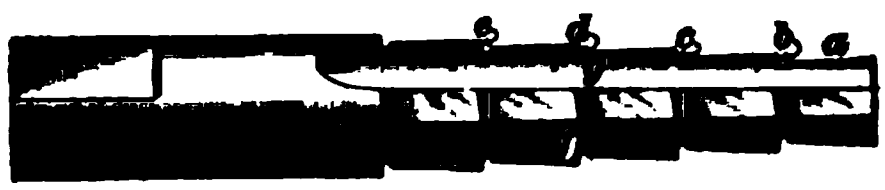

FIG. 39.

55. Care of Reamers.—The most serious difficulty met with in reaming is the maintenance of the full diameter of the cutting edges, and in order to keep them in good condition as long as possible, the greatest care should be taken in their use. This is especially necessary with finishing reamers, which may be rendered useless by a very little wear or a slight injury. Reamers should never be pounded or jerked sidewise when in a hole, and when not in use, they should always be kept on wooden shelves, or on a wooden board, or other support, if at the machine.

56. Inserted Blades.—A form of reamer that is gradually growing in favor is illustrated in Fig. 40. The cutters, which are made of steel, are dovetailed into a solid body. In reamers of 5 or 6 inches diameter, the body is sometimes made of cast iron. The special advantage of this form lies in the ease with which an injured blade may

be renewed. In the solid reamer, a cracked or broken cutting edge, or any slight warping, throws the whole reamer out of use. In this form, the injured part is simply driven out of the dovetail, a new one is inserted, and the reamer is

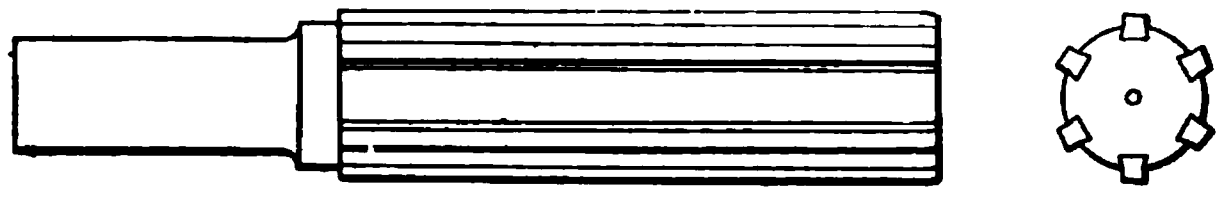

FIG. 40.

as good as when it was new. This is especially advantageous in the larger sizes, which are very expensive.

Inserted blades are, however, not practicable in the smaller sizes, as there is not stock enough to support the blades properly. Opinion as to the minimum size in which they can safely be used varies; ordinarily, they are not used in reamers less than 1¼ inches in diameter.

ADJUSTABLE REAMERS.

57. Advantages of Adjustable Reamers.—When solid reamers are used, it is customary to make the diameter as much larger than the desired diameter as the limit of error in the working fit will permit, and to use it until the diameter has been reduced to the inside limit of error, after which it must be worked over or discarded. For the best grades of machine work, where the permissible variation is reduced to a minimum, the life of such a reamer is very short.

58. A Simple Adjustable Reamer.—For this reason, reamers with adjustable cutting edges have been found

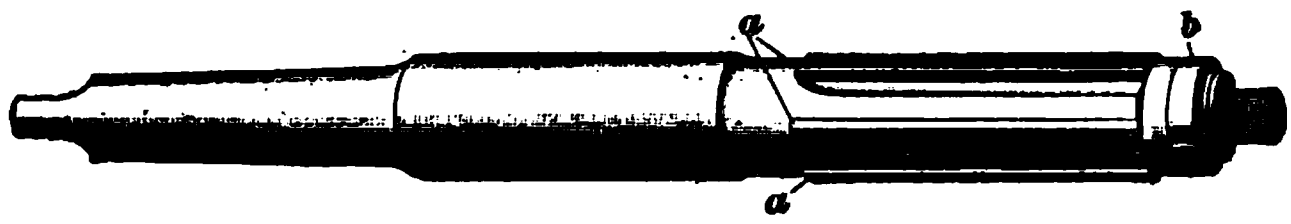

FIG. 41.

much more satisfactory than the solid type. Fig. 41 shows one type of **adjustable reamer.** The reamer is adjusted

to the desired size by means of a ground tapered plug that acts upon the blades *a*, and is locked by the locknut *b* when the adjustment has been made. With this type, a limited amount of wear or the reduction of diameter due to grinding can readily be taken up.

59. Adjustable Reamer for Different Sized Holes. — An adjustable reamer that can be easily and accurately adjusted may take the place of a number of solid reamers. Fig. 42 (*a*) and (*b*) shows a reamer especially made for this purpose. The blades *a* are held in the body *b* by

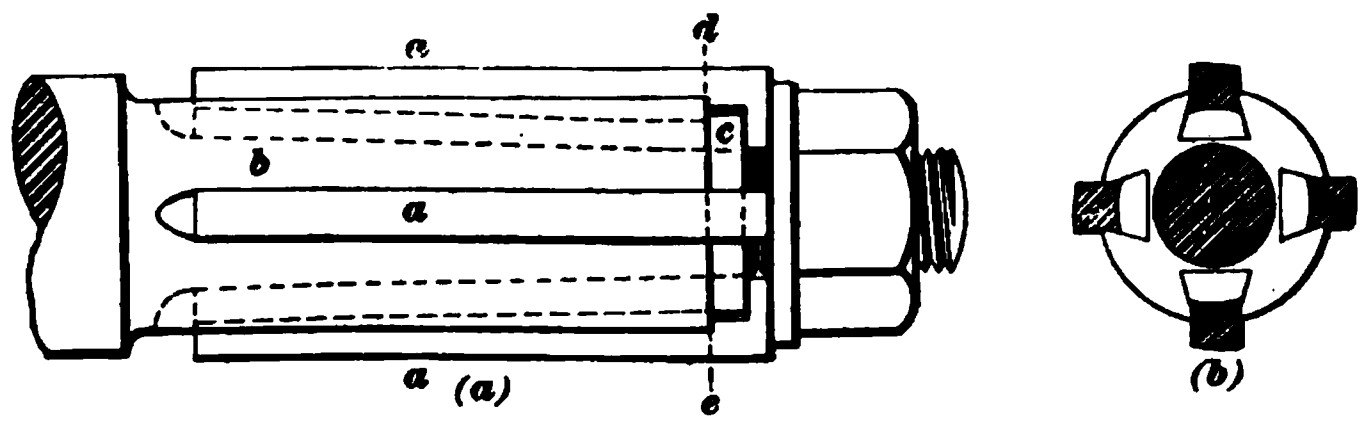

FIG. 42.

dovetails in which the blades fit on the sides and bottoms. The part of the body of the reamer that forms the bottoms of the dovetails slopes toward the center, the slots being deeper nearest the nut. Then as the blades are moved toward the shank they are forced out and the diameter of the reamer is enlarged. A collar *c*, which fits into notches in the blades, determines their position and fixes the diameter of the reamer. By having different sets of blades, and collars of different lengths, such a reamer may be used for a number of sizes and will do fairly accurate work. Fig. 42 (*b*) shows a section through *d e* of Fig. 42 (*a*). For extreme accuracy the solid reamer is best. Sometimes adjustable reamers are so arranged that forcing the blades toward the point expands them, the nut being placed back of the blades.

60. Expansion Reamer.—Another adjustable form of reamer, known as the **expansion reamer,** is shown in Fig. 43. The reamer is drilled for a taper plug in the lower end, and the sides are slotted, as shown. The plug

is threaded, and, when screwed into the end of the reamer, expands it. Reamers of this kind are made as small as ¼ inch in diameter, while the reamer illustrated in Fig. 41 is not made smaller than ⅜ inch. The adjustment also is very easily made, and, by taking a number of cuts, a large amount of metal may be removed. The hole is not, however, very accurate. The expanding plug enlarges the

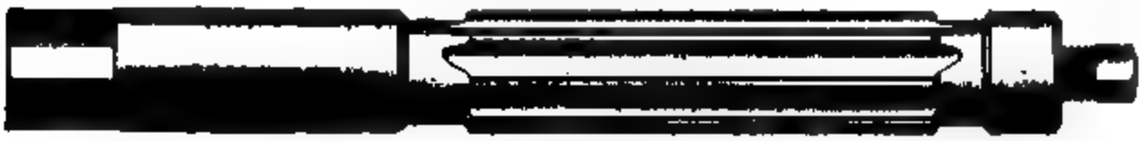

FIG. 43.

middle of the reamer most, and the cutting edges taper toward the ends, resulting in curved cutting edges without a straight portion to guide them. Any unevenness in the structure of the metal causes the reamer to run out of its true course. Where accuracy is essential, this kind of reamer should never be used for the finishing cut, but should be followed by a finishing reamer.

SHELL AND ROSE REAMERS.

61. Fig. 44 (*a*) shows an ordinary **shell reamer,** and Fig. 44 (*b*) a **rose shell reamer.** Both of these have already been described in Art. **31,** *Lathe Work,* Part 2.

(a) (b)

FIG. 44.

They are sometimes fitted to shanks, which in turn fit drill sockets, and are used in drilling machines. The rose reamer is especially well adapted to removing a large amount of

metal in this way, but usually does not leave the hole smooth, and should therefore be followed by a finishing reamer.

The rose reamer shown in Fig. 44 (*b*) has a flute for every second cutting edge. Many persons prefer to have a flute for each cutting edge, claiming that it adds to the efficiency of the reamer. Rose reamers are therefore often made this way. If the rose reamer is used for horizontal work, as in a horizontal drill or lathe, the chips will clog in the short flutes; hence, each cutting edge should have a flute.

COUNTERSINK.

62. Definition.—It is frequently necessary to enlarge the end of a drilled hole to take the taper head of a bolt or other machine part, as shown in Fig. 3 (*a*). This operation is known as **countersinking.**

63. Drill as a Countersink.—The tools used in countersinking resemble very closely the various forms of drills. In some shops and for some classes of work, the point of a drill is simply ground to the desired taper. When the cutting edges are properly formed, the metal uniform, and the surface smooth, very good results are obtained in this way, but for general use it is better to have a countersink that is guided by a center pin.

64. Pin Countersink.—A flat countersink provided with a pin *a*, which fits the hole and holds the tool perfectly central under all conditions, is illustrated in Fig. 45. This same style of tool is sometimes made with four cutting edges, as illustrated in Fig. 46.

65. Pin and Collar Countersink.—Where a countersink of the same taper is occasionally required in holes of different diameters, a tool as shown in Fig. 47 is found very serviceable. The pin *a*, instead of fitting the

hole, becomes the bearing of a set of collars *c*, which are turned on the outside to fit the different holes in which the tool is to be used. The collars in this form of tool

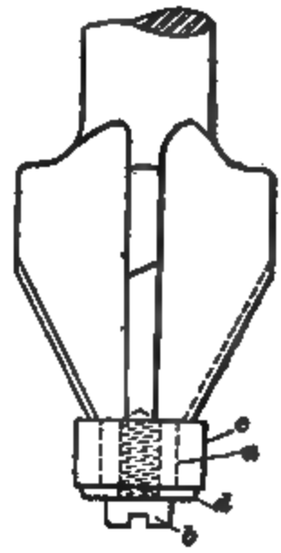

FIG. 45. FIG. 46. FIG. 47.

are secured by a screw *b* and washer *d*. The cutting edges may be made of any type desired, but four edges, as shown

b

(c)

FIG. 48. FIG. 49.

in the illustration, are perhaps the most desirable, there being enough cutting edges to guide properly, while the

construction is very simple. Turning the cutting edges back, as shown, forms a bearing for the top of the collar and facilitates the grinding. In some cases, collars are simply slipped over the pin of an ordinary countersink.

66. Combined Reamer and Countersink. — In plate work, reaming and countersinking may be done at the same time with the combination tool shown in Fig. 48. The lower end *a* is made like an ordinary fluted reamer, while the countersink *b* is formed with four cutting edges ground to the desired angle.

67. Center Countersinks.—Milled and half-round countersinks, as shown in Fig. 49 (*a*), (*b*), and (*c*), are used almost entirely in enlarging centers in lathe work, but these styles may be used for ordinary countersinking as well.

COUNTERBORE.

68. Ordinary Types.—Counterboring consists of enlarging a hole at one end so that the enlarged part has parallel sides and a flat bottom, as illustrated in Fig. 3 (*b*). For small counterbores, any of the pin countersinks already described, with the cutting faces ground at right angles to the center line, as in Fig. 50, are frequently used.

69. Double-End Cutter. — A better counterbore, Fig. 51, is made from a round bar of steel with a rectangular hole cut through it, into which a flat cutter *a* is inserted and held by means of a key *b*. The lower end of the bar is made to fit the hole without any play, while the length of the cutter represents the diameter of the counterbore. This cutter cuts on both sides of the bar,

FIG. 50.

and great care must be taken to have it project the same distance on each side, and to have the cutting edges ground so that both sides will take an equal cut.

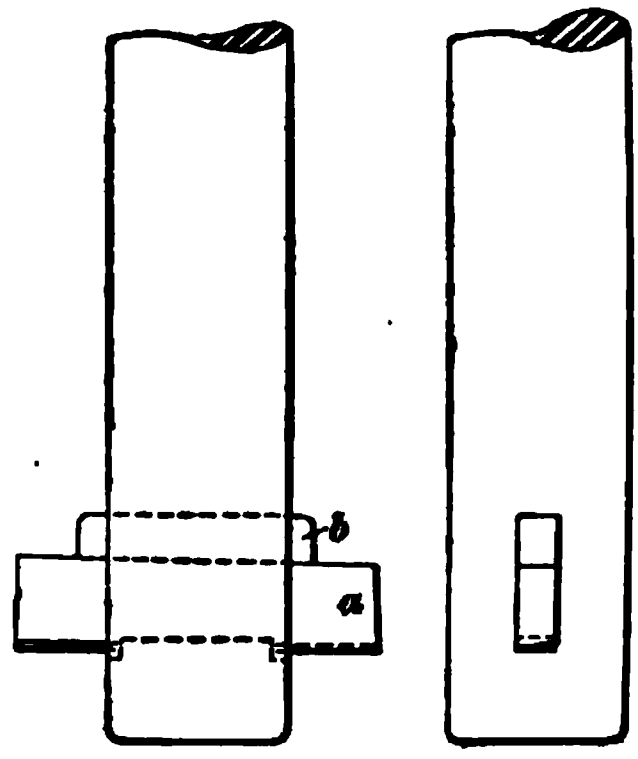

FIG. 51.

70. Single-End Cutter.—This style of counterbore is sometimes made with the cutter projecting on one side only. The latter tool is used very generally in boring holes in horizontal drilling and boring machines, and is usually called a *boring bar and cutter.*

71. Milled End of Bar.—Sometimes the lower end of the boring bar and of the pin on the pin counterbore is made with the corners slightly rounded and serrated. This is especially useful when the hole is drilled slightly under size or is not perfectly round, as it enables the boring bar to cut away enough metal to permit it to turn freely.

72. Counterbore for Light Work.—A very useful tool for counterboring is illustrated in Fig. 52 (*a*). A circular hole *a* is drilled in the bar *b*, in which a circular piece of tool steel *c* is inserted and held in place by a pin *d*. The bar is then put in a lathe and the ends of the tool *c* turned up to the desired diameter. The ends are backed off and the cutting edges ground as shown. The lower end of the bar is turned to the diameter of the hole below the counterbore, to form a guide for the tool.

This tool gives very good results when operated with care and on light cuts, but the cutter is not heavy enough to stand a very heavy strain. The breaking of the cutter is, however, not a serious matter, as it can be replaced with very little loss of time and at small expense.

73. Counterbore With Changeable Tool.—This same style of cutter may be used with the device shown

in Fig. 52 (*b*) without danger of breaking under ordinary usage. The bar *b* has a hole *a* drilled into it as in Fig. 52 (*a*), and immediately above this a slot *c* is formed. The tool *d* is made with an angle on top, as shown, and a support *e* for the cutter is shaped to fit this angle and the slot *c* when the

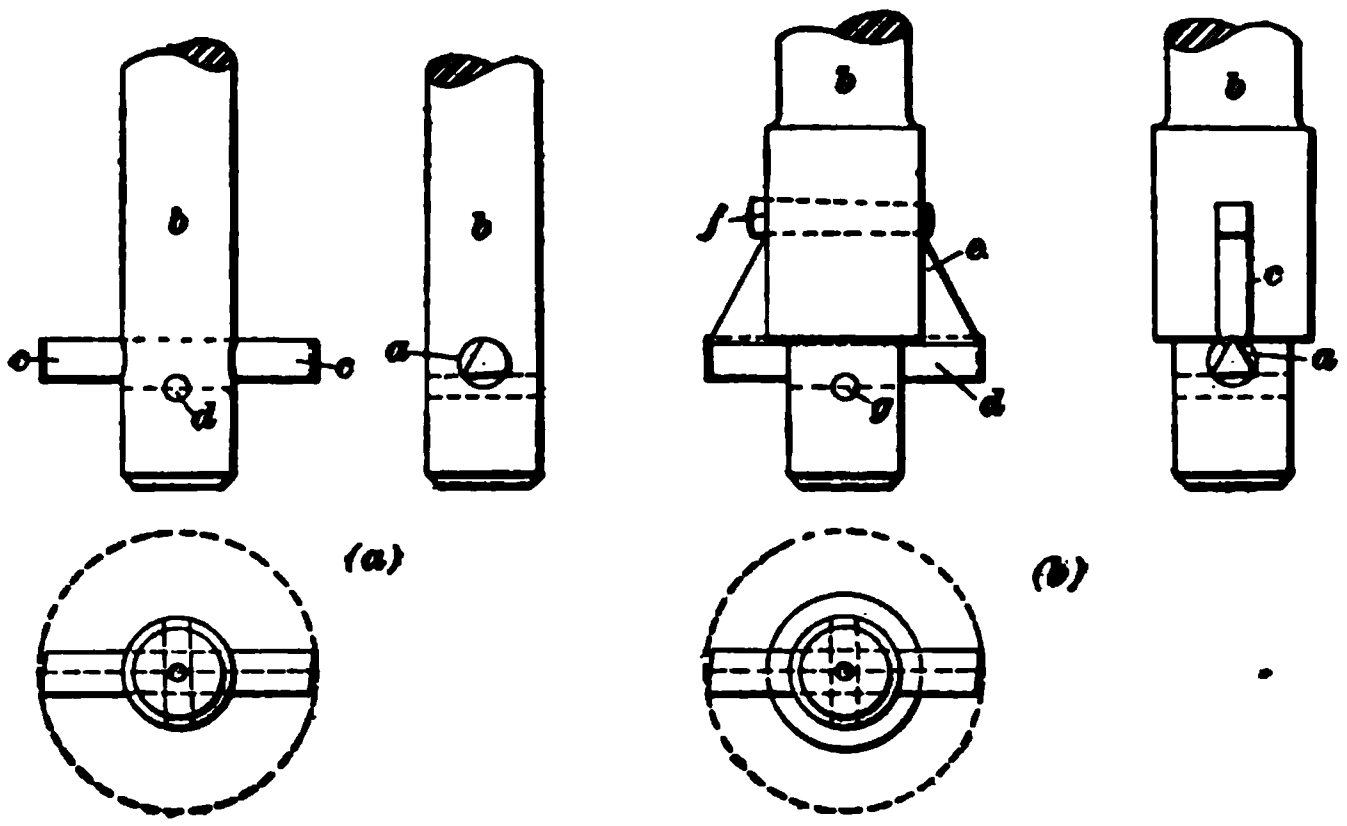

FIG. 52.

tool stands in its proper position. A wedge *f* holds the tool and its supporting piece rigidly in place, while the pin *g* prevents any end motion of the cutter. The piece *e* should run the entire length of the cutter, in order to furnish as much support for the ends of the tool as possible.

A set of cutters and supports of different lengths may be made for use in the same bar, thus providing counterbores of a number of sizes at a very small cost. A set of collars for the bar end that will fit various holes will render this tool available for a large range of work.

74. Special Counterbore. — Another tool that is sometimes used in counterboring, and is available for a broad range of work, is shown in Fig. 53. The body *a* has grooves *b* running lengthwise, into which blades *c*, with side projections *d*, are fitted. The blades are held in place longitudinally by the hooked ends *e*, which fit a corresponding groove in the nut *f*. An opening *g* at the end of the nut permits the blades to enter when the nut is turned to the right

position. When the blades are all in place, they are moved to the right location on the body by screwing up the nut *f*, and are locked in place by the locknut *h*.

It will be seen that by making sets of blades of different sizes and providing center pins *i* of corresponding sizes, a set of counterbores covering a wide range of work may be provided. While this tool is more expensive than the one

FIG. 52.

shown in Fig. 52 (*b*), it has the advantage of being available for smaller holes, since the size of the center pin may be made much smaller. This tool will therefore cover a broader range of work, and, when once constructed, can be used until the greater part of the blades is worn away, thus avoiding the expense of frequent renewals.

SPOT FACING.

75. Definition. — A very common drilling-machine operation is the facing of spots about drilled holes, to form smooth surfaces for the heads or nuts of bolts or other machine parts. When the faced area is quite small and the facing is done with a rotating cutter, the operation is called **spot facing.**

76. Forms of Cutters.—The cutters are the same as those used for counterboring, and the only difference in the

operation lies in the depth of the cut. A counterbore may be of any depth, but the spot facing is only carried deep enough to form a smooth bearing surface. The bar with inserted cutter is especially well adapted to spot facing flanges of cylinders, cast-iron pipe flanges, etc.

77. Spot Facing Lower Side of Flange.—Fig. 54 shows a piece of pipe on which the flanges must be spot faced on the lower side. The flanges are drilled in the ordinary way, after which the drill is removed from the socket and the cutter bar put in its place. The cutter is then removed from the bar, the bar passed through the hole, and the cutter again put back into its place in the bar with its cutting edges toward the flange. The facing is done by feeding the drill spindle backwards.

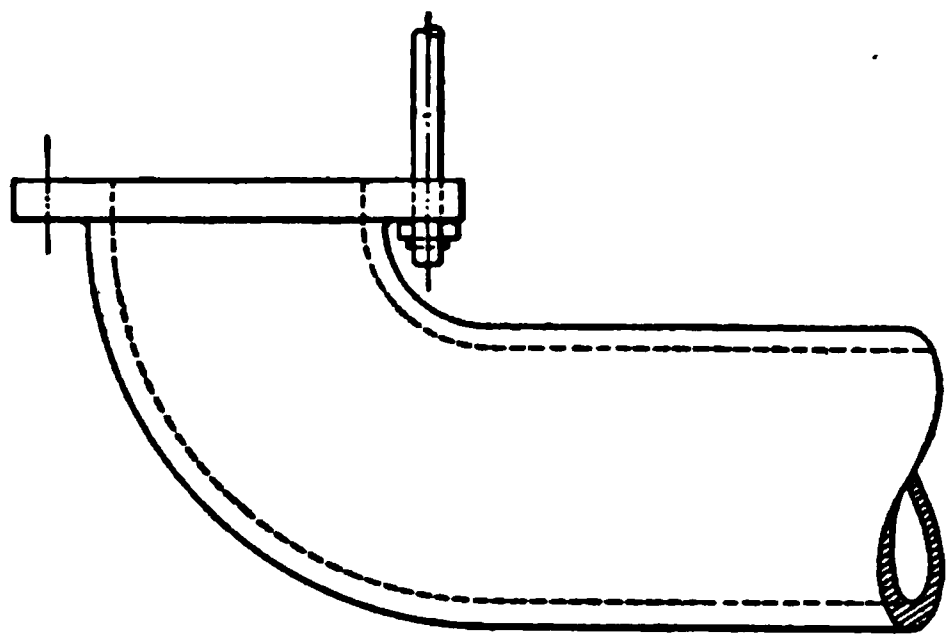

FIG. 54.

CENTER DRILLS.

78. Although **center drilling** is essentially a drilling-machine operation, it is so closely associated with lathe work that it has been discussed under that head, and descriptions of tools and their various uses are found in Art. **23,** *Lathe Work*, Part 1.

TAPS.

79. The forms of **taps** used in drilling machines resemble those employed with the lathe. In holes that do not run through the material, **taper** and **plug taps,** Fig. 55, are required, the former to start the thread and the latter

to complete it to near the bottom. When a full thread must be run all the way to the bottom of the hole, the plug tap is followed by a **bottoming tap,** shown in Fig. 55. In the case of holes that pass through the material, the taper

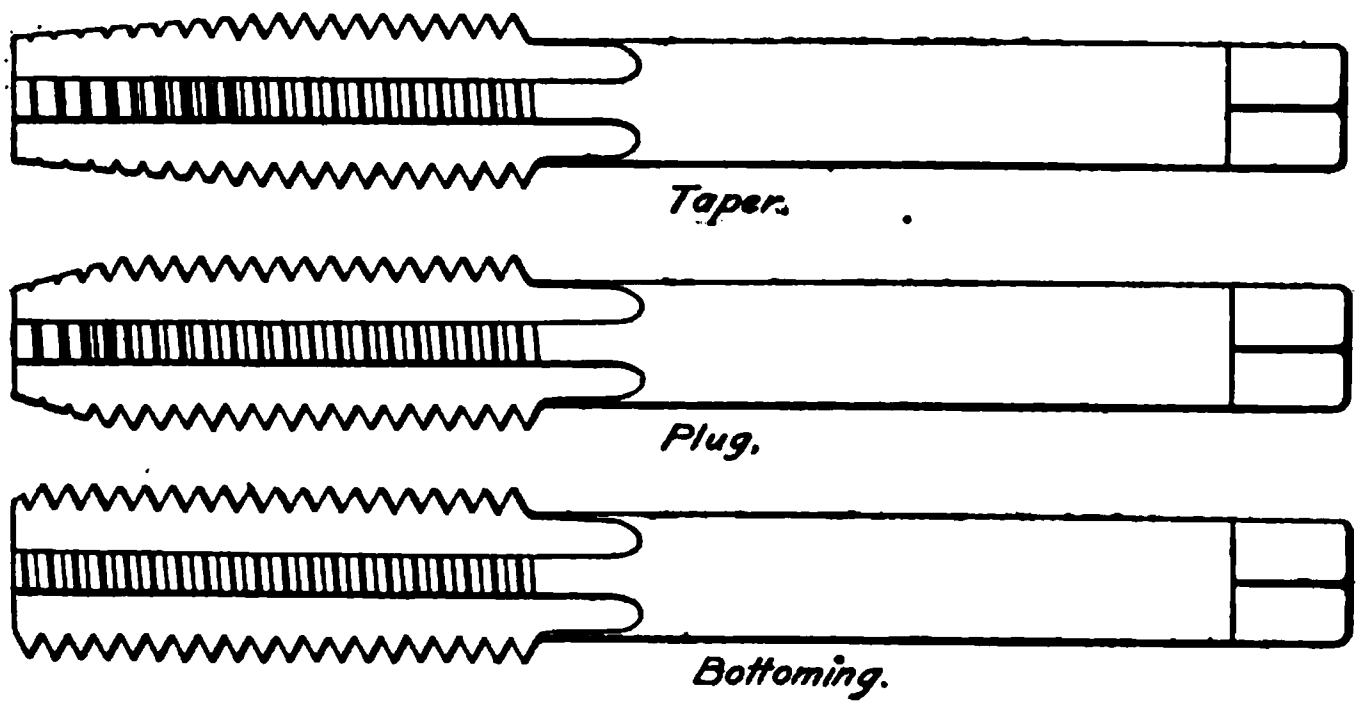

FIG. 55.

tap alone may be used. In high-speed machines, such as pneumatic drills, a long taper tap gives the best results, on account of the fact that less material is removed by each tooth, the work being distributed along the length of the tap.

The shanks of taps that are to be employed in the drilling machine exclusively may be made to fit the spindle or a collet of the machine for which they are intended. When they are required for general use, special sockets are needed to receive the square shank of the tap.

DEVICES FOR HOLDING TOOLS.

80. Straight Socket With Setscrew. — Various devices for holding tools in drilling-machine spindles have been brought into use. One of the earliest of these—still found in some shops—consists of a hole drilled in the bottom of the spindle, with a setscrew holding the drill, as shown in Fig. 56. This device has several disadvantages. The drill may press on one side of the screw and in a

direction that tends to loosen it. To prevent this, the screw is jammed upon the drill, causing a burred shank that it is difficult to remove. When the shank does not fit the socket exactly, the pressure of the screw on one side throws the drill off the center of the spindle and results in the cramping of the drill and a poorly formed hole, and often in an injured or broken drill.

FIG. 56.

81. Taper Shank.—A very simple and efficient means of holding the drill, known as the **taper shank,** is shown in Fig. 57. The drill spindle *a* is made with a tapered hole *b* at the lower end. At the upper end, the hole is made

FIG. 57.

flat on two sides to receive a tang or flattened projection on the upper end of the drill shank.

The taper that is in most common use for drill shanks is

known as the **Morse taper** and is about $\frac{5}{8}$ inch per foot. This taper is just great enough to hold the drill when put into place with a quick motion of the hand or under slight pressure. The drill shank must, of course, be made with precisely the same taper as that in the spindle, so that the entire surface will be in contact. The tang at the top of the drill shank must also fit snugly, as it takes practically all the torsional strain that comes upon the drill when cutting, the tapered surface taking only a very small part. The drill is removed by driving a taper key *c* into the slot *d* in the spindle. The slot *d* is so located that the point of the key just passes over the end of the tang, but when the body of the key is driven in, it forces the drill out.

82. Drill Sockets or Collets.—All sizes of drills cannot be made with the same size of shank; consequently, it is necessary to have a number of **drill sockets** or **collets,** Fig. 58 (*a*) and (*b*), to take the sizes of drills that do not fit the spindle. The upper end of the socket is made to fit the spindle, or the next larger size of socket, while the lower end is made to fit the desired drill.

Collets are also found very serviceable where it is desirable to use a drill with one kind of shank in a spindle intended for another. Fig. 58 (*c*) illustrates a collet for a taper-shank drill and a straight spindle.

(a) (b) (c)

FIG. 58.

83. Pin-Grip Socket.—A form of drill socket that permits the drill to be changed while the spindle is running is shown in Fig. 59. The shank of the socket *a* is made to

fit the taper of the spindle *b*. A collet *c* is made to fit over the shank of the drill *d*. The body of the socket *e* is bored out straight to receive the collet, which is held in place by two pins that enter the groove *f* and are controlled by the collar *g*. To remove the collet, the collar *g* is raised with one hand, while the drill is in motion, and the collet is removed with the other hand.

FIG. 59. FIG. 60.

Fig. 60 shows a partial section of the socket. The collar *g* is bored out to form an internal cam. When the collar is in its lowest position, it holds the pins *h*, *h* in, as shown, their points entering the groove *f* in the collet. When *g* is raised to the position *i* indicated by the dotted lines, the centrifugal force tends to throw the pins out, thus relieving the collet. The ends of the pins are tapered, so that the weight of the collet or drill will assist in moving them out when the

machine is running at a slow speed and the centrifugal force alone is not sufficient. The collar is brought back by its own weight when relieved by the hand. The collet *c* is made with a tang *j*, which stands between the two pins *k*, *k*, thus causing it to rotate with the spindle.

84. Key-Grip Socket.—In very heavy work, the tang sometimes yields to the torsional strain and is twisted. Fig. 61 illustrates a device that grips the body of the shank as well as the end. The illustration shows the grip socket

FIG. 61.

with a part cut away, thus exposing all the working parts. The shank and tang are of the ordinary taper type. A keyway *a* is cut into the shank of the drill with a circular cutter, thus making the bottom the arc of a circle. The key *b*, which fits the bottom of the keyway and also a slot in the socket, is held in place by a collar *c*, which is bored eccentrically, and which, when in the position shown, causes the key to grip the shank with a tendency to keep it from working out, as well as preventing it from turning in the socket. To remove the drill, the collar is turned to a position where the key is free to move out of the drill shank, and the drill is driven out in the usual way. This device can be used with any of the standard taper-shank drills by simply milling in the keyway.

85. Light Drill Chuck.—Separate chucks that grip the drill on two or more sides are found very

FIG. 62.

satisfactory for the lighter grades of work, and a large number of different kinds have been made. Fig. 62 represents a type that is largely used for small drills. The body of the chuck *a* is attached to the drill spindle either by means of a screw or a taper shank, as described above. In three holes *b* converging toward the center line, as shown, are three jaws *d*, which, when forced forwards by the nut *c*, close in upon the drill shank and grip it firmly. The jaws are so formed that the parts that grip the drill are always parallel and therefore grip various sizes equally well. The nut is held in and turned with the collar *e*, which is nurled on the outside to furnish a better grip for the hand.

86. Heavy Drill Chuck.—Another form of chuck that has given excellent satisfaction and is used for heavier work than the one just described, is shown in Fig. 63. The body of the chuck has a slot *a* cut across the lower end, in which two jaws *b*, *b* are free to move toward and away from the center. These jaws are controlled by means of a screw *c*, one end of which has a right-hand thread and engages with the thread on one jaw, while the other end has a left-hand thread that engages with the other jaw. The jaws are so guided that the faces are always parallel, and drills of any diameter that will enter the chuck are gripped equally well. A hole in the plate *e*, which is screwed to the bottom of the body, is large enough to take only the largest diameter of drill for which the chuck is designed. A plate *f* immediately above the jaws contains a slot *g* made to fit the tang on the upper end of the drill shank, thus preventing the drill from slipping in the chuck.

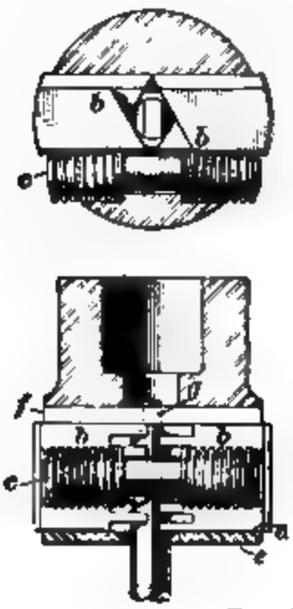

Fig. 63.

87. Safety Drilling and Tapping Device.—A very efficient safety device for drilling and tapping is illustrated in Fig. 64. A shank *a*, which is tapered to fit the spindle with which it is to be used, has upon its lower end an enlarged part that is threaded on the outside and bored out to form a friction seat for a socket *b*. A cap *c*, which has an internal thread to fit the external thread on *a*, clamps *b* between itself and *a*, forming another friction surface between *b* and *c*. Two fiber washers *d* and *e* are placed between *a* and *b* and *b* and *c*, respectively. The cap *c* is tightened on the washers until the friction obtained is sufficient to drive the drill or tap, and is held in adjustment by the check-nut *h*.

FIG. 64.

Two spanner wrenches are required to make the adjustment. Drill and tap sockets that fit the required drills or taps are made to fit the socket *b* and are kept from dropping out by the catch pin *l*, which enters the grooves *m* and *n* in the drill and tap sockets, and is held in place by a spring and retaining screw. The sockets are driven by means of two feathers. The tap shank is made about $\frac{1}{100}$ inch smaller in diameter than the tap socket *f*, thus allowing the tap to take its own feed without injury to the thread, and to center itself with the hole without binding, while a catch pin *o*, held in place by a flat spring, engages with a groove in the tap and keeps it from dropping out until a force greater than its own weight is applied. A specimen of the taps used, marked *i*, shows how the shank is constructed, *p* being the groove for the catch pin. The drill

sockets *g*, which are made in various sizes to take different sized drills, have a standard taper and a slot *j* at the upper end to receive the tang.

88. Automatic Reverse Tapping Chucks.—Where a large amount of tapping is done, much time may be saved by the use of a device that will reverse the tap and back it out, either when the tap bottoms or sticks, or when it has run the required depth. Several such devices are on the market and many of them give very good results. In one class, the mechanism is so designed that the tap travels with the spindle while running forwards, but as soon as it meets with more than a certain amount of resistance, a reversing gear, or set of gears, is thrown into action and the tap is backed out at an increased speed. In another class, the tap is also reversed and backed out when it has run a stated depth. Such a device, it will be seen, is a safety provision as well as a means of saving a large amount of time.

SECURING WORK ON THE TABLE OF THE SIMPLE DRILLING MACHINE.

89. Securing the work properly on the table of a drilling machine is one of the important parts of drilling. A piece that is not properly set or not well secured will not be well drilled, although all other conditions may be perfect.

90. The Table.—The **table** of the ordinary drill press should furnish a perfectly plane surface standing at right angles to the center line of the spindle. It should also be provided either with holes through which bolts may be passed or radial slots for T-headed bolts, so that work may be clamped rigidly upon it.

91. Securing the Work.—A plain piece of work, in which the holes are to be drilled at right angles to a plane upon which the piece may rest, may be secured very simply in the following manner: The piece *a*, Fig. 65, which is to be drilled, is laid upon the table *b*, with two parallel pieces of iron *c*, *c* under it to raise it far enough from the table to

prevent injuring the latter when the drill emerges from the piece. Two clamps *d*, *d* are then placed with one end upon the piece over the parallels, and the other end upon blocks or screw jacks *e*, *e* of the same height as the top of the piece. Bolts *f*, *f* are then put through the clamps and the table, as near to the work as the holes will permit, and the nuts screwed down until the clamps press firmly upon the piece and hold it rigidly enough to prevent any slipping while the drill is passing through it.

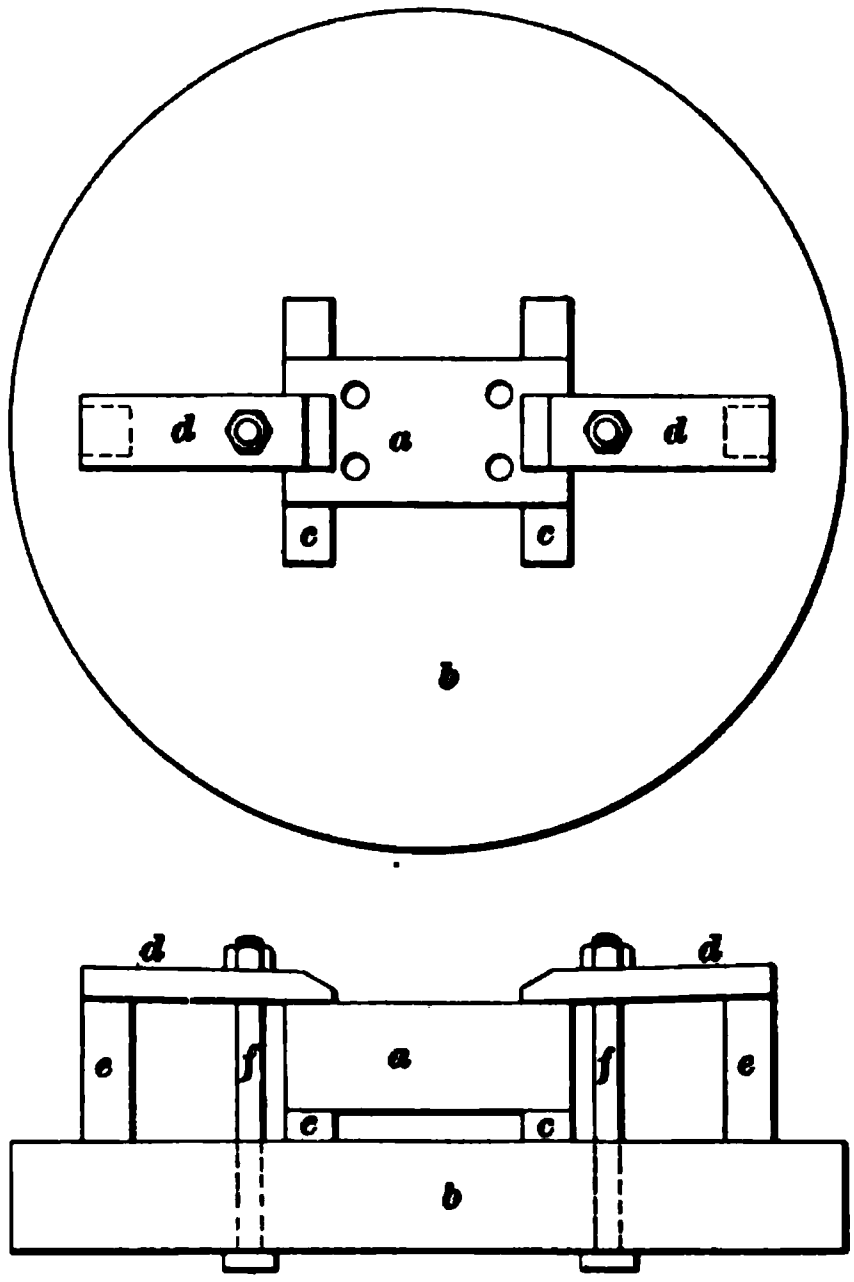

FIG. 65.

The above illustration embodies the essential features of clamping. A piece must always be set so that the center line of the hole to be drilled is parallel to the center line of the spindle, and must be clamped rigidly in that position. Great care must be taken to have all the supports so adjusted that the piece will not spring out of shape when the clamps are tightened down.

Irregular parts that have not a plane surface upon which to rest must be supported with jacks or blocks at different points. When pieces that are too large to be supported entirely upon the table are to be drilled, the overhanging parts must be blocked up, to prevent any undue strain upon the table or any spring in the piece itself.

92. Plain Clamp.—The **clamps** are often made by drilling a hole a little larger than the bolt in a piece of flat

iron of suitable length. This kind of clamp is sometimes made with an offset, as shown in Fig. 66 (*a*), which serves the double purpose of forming a shoulder to prevent the work from rotating and of lowering the clamp-bolt nut so that it does not interfere with other parts.

93. U Clamp.—A more convenient clamp is made of a piece of square iron bent in the form of a **U**, as shown in Fig. 66 (*b*), the inside width being just great enough to take the bolt freely. Such a clamp can be removed and replaced without taking the nut off the bolt. In some cases, the other form is of advantage, however, and both are found among the accessories of a drilling machine. The **U clamp** is often made without the offset at the end, shown in the illustration.

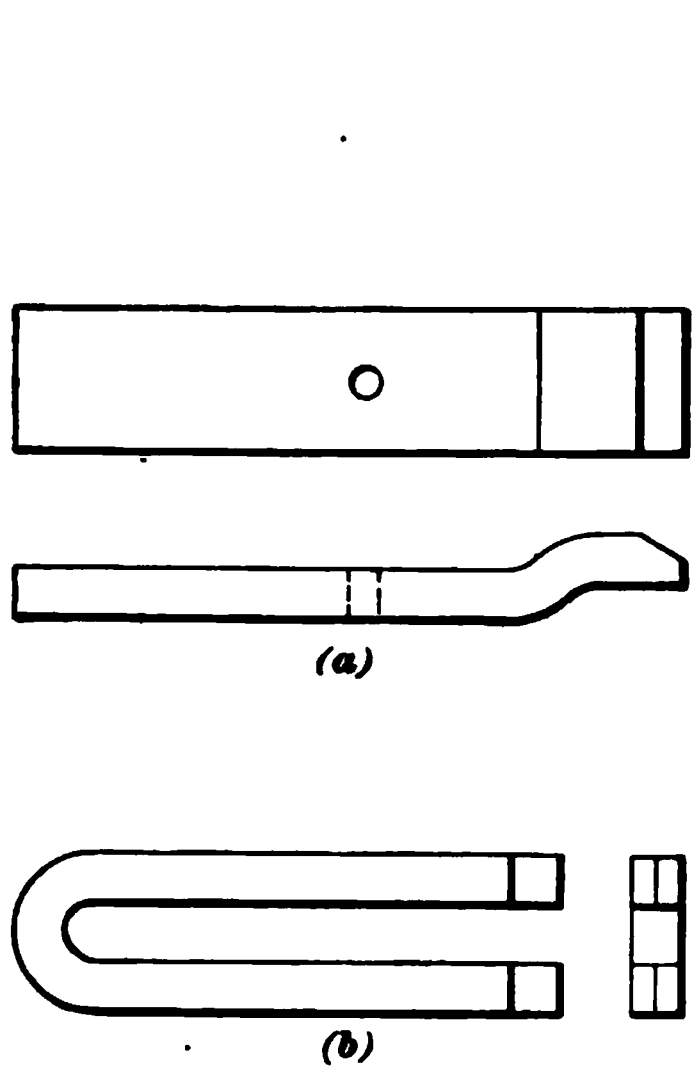

FIG. 66.

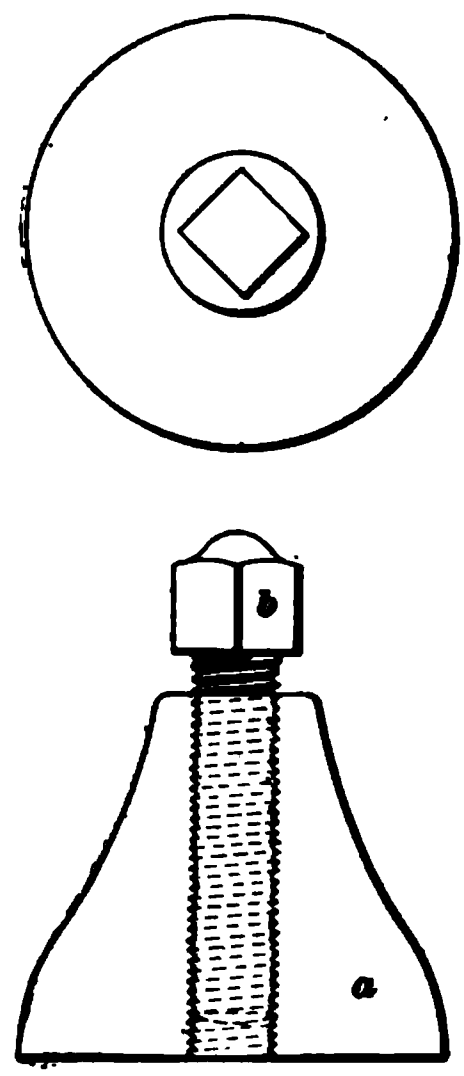

FIG. 67.

94. Screw Jack.—The **screw jacks** mentioned above consist of a cast-iron foot *a*, Fig. 67, which has a tapped hole running vertically through it and a square-head bolt *b*, with a thread cut the entire length of the body, screwed into it. The top of the bolthead should be faced to form a good bearing surface, and the corners rounded to

prevent any digging when adjusting the height. The bottom of the foot is sometimes left rough, but it is better to have it finished.

95. Parallels.—The **parallels** used in blocking up the work should be carefully planed and should be made of rectangular cross-section and in pairs. Sometimes parallels are made with the width exactly twice the thickness. It is convenient to have the width of each pair equal to the thickness of the next larger.

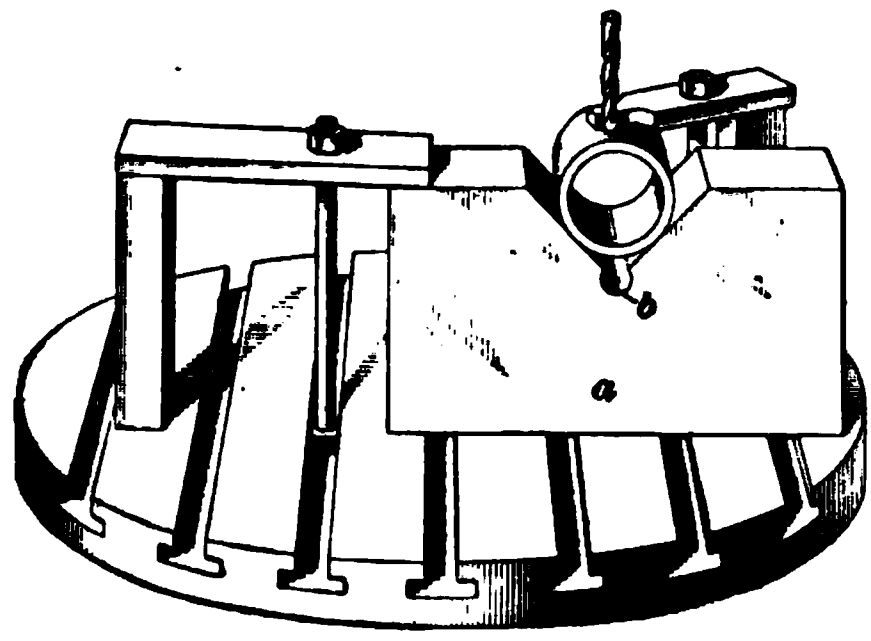

FIG. 68.

96. V Blocks for Supporting Cylindrical Pieces. Cylindrical parts are usually supported on **V blocks** *a*, Fig. 68. The **V** blocks should be made in pairs, so that a piece resting upon them may be exactly parallel to the drill table. It is usually of advantage to make the block wide enough to support short pieces with a single clamp, as shown in Fig. 68. A hole *b* drilled at the point of the **V** will form a clearance in planing. The two sides of the **V** usually make an angle of 90° with each other.

97. Angle Plates.—Pieces with a plane surface at right angles to the surface to be drilled are usually attached

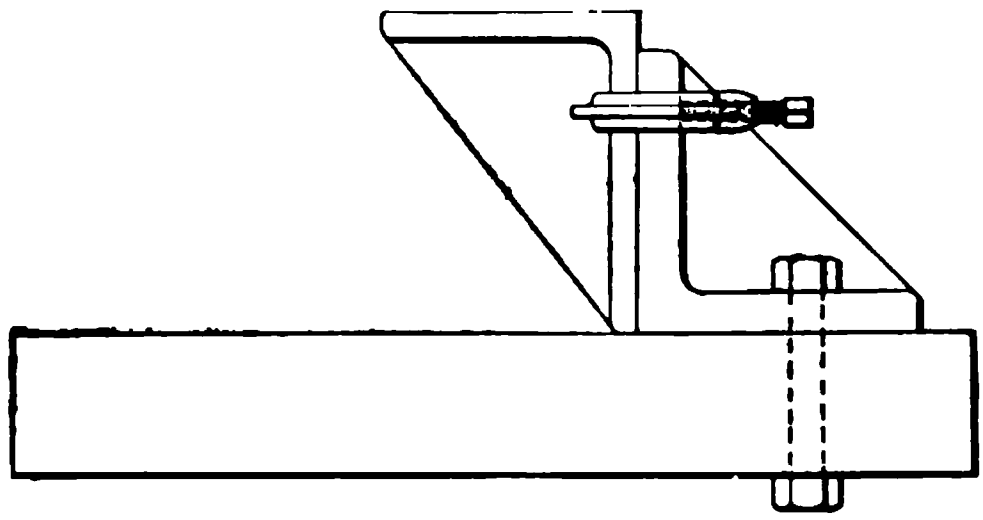

FIG. 69.

to an **angle plate** by means of clamps, as illustrated in

Fig. 69. If the overhanging part is too long, it should be blocked or jacked up and clamped at another point as far away from the angle plate as possible. The angle must, of course, be firmly bolted to the table.

98. C Clamps.—The style of clamp shown in Fig. 69 is known as a **C** clamp and is shown on a larger scale in Fig. 70.

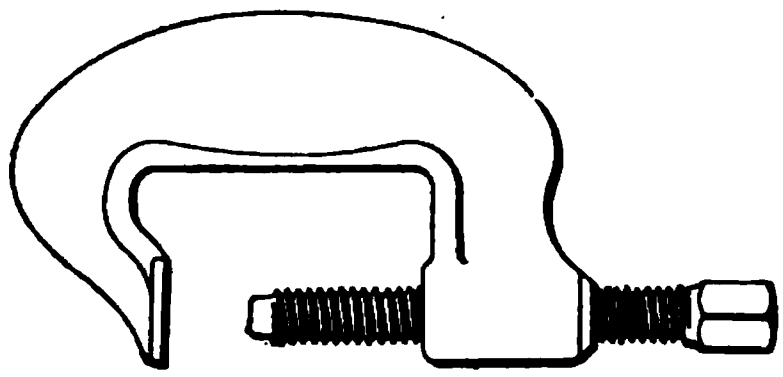

FIG 70

99. Special Angle Plates. — Angular pieces are frequently supported on angle plates of the same inclination as the piece. For instance, the piece *a* in Fig. 71 is clamped to an angle plate *b* of the same inclination, thus bringing the surface to be drilled parallel to the table.

100. Vise.—A **vise** as shown in Fig. 72 is often used for supporting the work. It is convenient especially where the bottom of a piece is irregular and yet has parallel sides that the vise may grip between the jaws *a*, *a*. A lug *b* on each side forms a convenient means of clamping the vise to the table.

101. Universal Vise.—Fig. 73 shows a **universal vise** that may be bolted to the table of a drilling machine

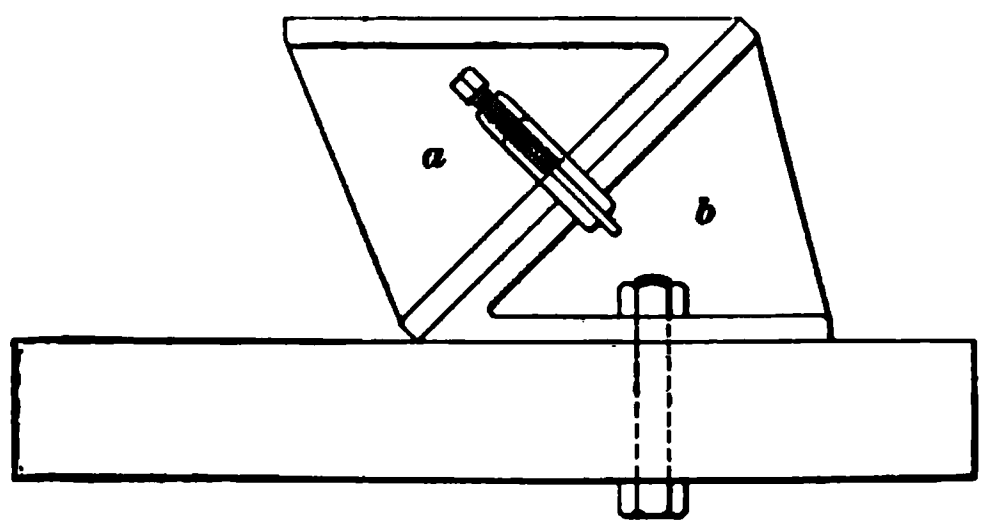

FIG. 71.

and may be rotated both in a horizontal and in a vertical plane. The two circles *a* and *b* are graduated, as shown. Such a vise is especially useful where holes must be drilled

at different angles in the same piece. The piece can be set either horizontally or vertically, and, by having the circles

FIG. 72.

graduated, it can be rotated to any desired angle without resetting.

102. Necessity of Clamping Rigidly. — When a piece has been set and adjusted in a vise, the jaws and all parts that are liable to move should be tightened securely. In a good vise, provision is always made for clamping every joint. In the universal vise shown, for instance, it is not safe to depend on the adjusting screws to hold the work, and the clamping screws should always be drawn tight when all adjustments have been made.

103. Drilling Parts Together.—When two adjoining pieces are to be drilled so that the holes in the two are to match perfectly, they should be drilled together whenever practicable. This insures a perfectly continuous hole, and avoids a great deal of awkward and expensive fitting.

104. Jigs and Fixtures. — In manufacturing, where pieces are duplicated in large numbers, special **jigs** and **fixtures** are made for holding and drilling the work. Some of these will be considered later.

FIG. 73.

DRILLING AND BORING.

(PART 2.)

TYPES OF DRILLING MACHINES AND THEIR USES.

DRILLS FOR LIGHT AND HEAVY WORK.

SIMPLE DRILLING MACHINES.

1. Up to the present time, only the simplest type of drilling machine has been considered—one that embodies only the principal features of the elementary drill.

2. Necessity of More Flexible Arrangement.—It is evident that in our modern practice there is need of a more flexible machine—one that will accommodate a broader range of work than the simple machine described.

3. Adjustable Table.—The great difference in the size of the work, and the various angles at which holes must be drilled, have demonstrated the need of an adjustable table that can be moved vertically, swung about the column, and rotated about its own center, while in some forms of drills it may be tilted to different angles.

4. Variable Cutting Speed.—It has already been seen that nearly all materials possess qualities that make it necessary to use different cutting speeds in order to work them efficiently. It is obvious also that a drill of large diameter must run more slowly than a smaller one, the revolutions per minute being inversely proportional to the

For notice of copyright, see page immediately following the title page.

diameter of the drill. To illustrate: A drill ½ inch in diameter may make twice as many revolutions per minute as a drill 1 inch in diameter, and four times as many as one 2 inches in diameter, in the same material. Provision must therefore be made for a number of different speeds, any one of which may readily be thrown in by the operator.

5. Variable Feed.—A more flexible means of feeding must also be provided. It is frequently necessary to have a greater pressure upon the drill than the hand lever described will furnish, and **power feeds,** in which the rate of feed can be varied, as well as other methods of feeding by hand, have been brought into use.

6. Movable Spindle.—It is of very great advantage, too, in some classes of work to be able to move the **spindles** to accommodate the work, and this has been accomplished in several different ways. It is evident, however, that every machine need not embody all these features, but all these and others are seen in the various machines found in well-equipped shops. The peculiar features of each machine are determined by the class of work it has to perform. It must always be remembered that the machine is made for the work and not the work for the machine, and, in distributing the work to the various machines, whether drilling machines or other machine tools, the adaptation of the machine to each piece must be considered.

MEDIUM-CLASS DRILL.

7. Fig. 1 illustrates a machine that is largely used for light and medium-class work, and one or more of this general type is found in every good machine shop. This machine differs somewhat from the elementary machine described, yet it embodies the same essential features.

8. Driving Gear.—The spindle *a*, Fig. 1, is driven by means of a pair of bevel gears *b*, *b* and a belt running on a pair of stepped or cone pulleys *c*, *c*. The four steps on

the cones furnish four different speeds, any one of which may be obtained by simply throwing the belt to the desired step. A belt running from the pulleys *d* and *e* to a countershaft transmits the power to the drill. Either *d* or *e*

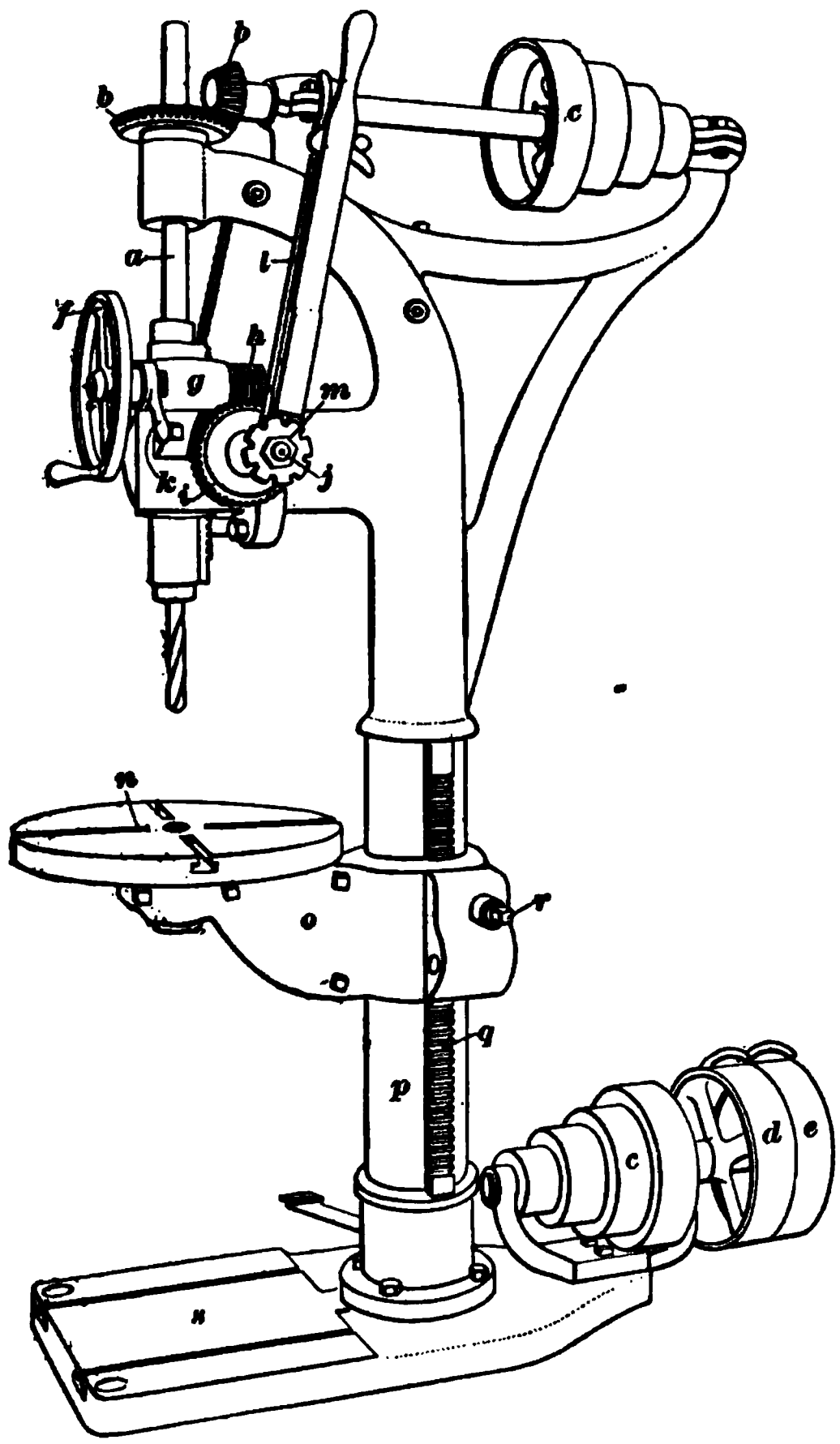

FIG. 1.

runs loose upon its shaft. When the belt is on the loose pulley, the drill stands still. To start up the drill, the belt is shifted from the loose to the tight pulley, which is keyed rigidly to the shaft, and therefore transmits the power to the pulley *c* and to the drill.

9. Feed.—In addition to the lever feed already described, a **wheel feed** is provided. This consists of a hand wheel *f* keyed to a shaft that has its bearing in the hub *g*, and on the other end carries a worm *h*, which engages with a worm-gear *i* mounted on the lever shaft *j*. It will be seen that a much greater pressure can be put upon the drill point with the hand wheel and worm than with the lever, and it is therefore used for the heavier work, while with small drills and materials that are easily cut, the lever is used.

Provision for using either method at will is made as follows: An eccentric bushing in the bearing *g*, in which the hand wheel and worm-shaft is carried, may be rotated by moving the small hand lever *k*, thus carrying the shaft out until the worm *h* does not engage with the gear *i*. Fig. 2 illustrates how this is done; *a* represents the hand wheel and worm-shaft; *b*, the bushing; *c*, the bearing; and *d*, the worm-gear. When *b* is in the position shown, the worm and worm-gear engage with each other, but when *b* is turned to the position shown by the dotted lines, the shaft *a* and the worm are carried with it and the worm and worm-gear are out of contact. The shaft *j*, Fig. 1, is then free to be turned by the hand lever. When it is desired to use the wheel, the lever must be disengaged. In the machine shown, the hand lever turns the shaft *j* by means of the spring latch *l*, which engages with a notched wheel *m* keyed to *j*. To disengage the lever, it is necessary simply to hold the latch in its raised position. This is done by means of a catch at the top of the lever.

FIG. 2.

10. Table.—The **table** *n* is supported on the arm *o* and may be rotated about its center, while both arm and table revolve about the column *p*. The table may be raised and lowered by means of a gear that engages with the rack *q*, and is turned through the medium of a worm and worm-gear with a wrench or crank applied to the square *r*. The drill foot *s* is used as an auxiliary table upon which work that is too large for the table *n* may be placed.

11. Adjustment and Clamping.—This arrangement will accommodate a wide range of work, while all operations and adjustments are under the complete control of the operator. It must be remembered, however, in dealing with these machines, that as the machine is made more flexible, so as to accommodate a wider range of work, a larger number of parts and joints are introduced, and greater care must be taken to keep every part in perfect adjustment. When a piece is set, and the table moved so that the drill is exactly central with the hole to be drilled, the table should be firmly clamped by tightening the bolts in all its movable joints.

HEAVY TYPE OF DRILL.

12. A heavier machine of this same type is shown in Fig. 3. The driving mechanism is furnished with a back gear at *a*, in order to supply a greater variety of speeds. The bevel gears driving the spindle are enclosed at *b*.

13. Feed. — This machine is supplied with a rapid **hand-lever feed** operated by the lever *c*, a **hand-wheel feed** operated by the wheel *d*, and a **power feed** operated by means of a belt running on the cone pulleys *e* and *f*, the latter being keyed to the main driving shaft, thus transmitting the power to a pinion and rack on the spindle, through the bevel pinion and gear *g* and *h* and the worm and worm-gear *i* and *j*. The power feed is thrown in and out by means of a clutch *k*, which is controlled by the pin *l* running up through the vertical feed-shaft. When both the power and

hand-wheel feeds are to be thrown out, in order to use the rapid hand-lever feed, the bearing *m* is moved out in the direction of the arrow *n*, by turning the rod *o* with which

FIG. 8.

the bearing is connected, the bearing *p* being pivoted so as to permit the bearing *m* to swing. A counterweight *s* balances the weight of the spindle and reduces the friction of the feeding device.

14. Table.—The table swings about the column as in Fig. 1, but, instead of rotating about its own center, it has a straight-line adjustment in the direction of the center line of the arm, which permits a straight line of holes to be

drilled without moving the arm. The table is raised and lowered by means of a crank *q* connecting through gears with a screw in the column that carries the nut *r* upon which the arm rests.

RADIAL DRILLS.

SIMPLE RADIAL DRILL.

15. A machine that is designed for a class of work that cannot well be mounted upon a drill-press table, either

FIG. 4.

because of its size or weight, is shown in Fig. 4 and is called a **radial drill.**

16. Driving Gear.—The spindle is carried in a head that traverses back and forth upon a radial arm *a*, which is hinged upon a vertical slide *s* on the column *b*. The spindle is driven by means of a belt *c*, which runs over pulleys *x* on the shaft *d* and *y* on the end of the arm, while an intermediate pulley that travels with the head, and about which the belt is carried by means of an idler, transmits the motion to the spindle. The plan of the belt *c* is shown in Fig. 5. The driving pulley *x* is splined upon the shaft *d*, while the pulley *y* is supported on the outer end of the arm *a*; *z* represents the driving pulley on the drilling head, and *w* represents the idler. The motion is transmitted either to the spindle direct or through back gears shown at *f*, Fig. 4. A counterweight *t* balances the weight of the spindle, thus relieving the feeding device. The head is traversed by means of a hand wheel *v*, which has a worm on the other end of its shaft engaging with the rack *g*.

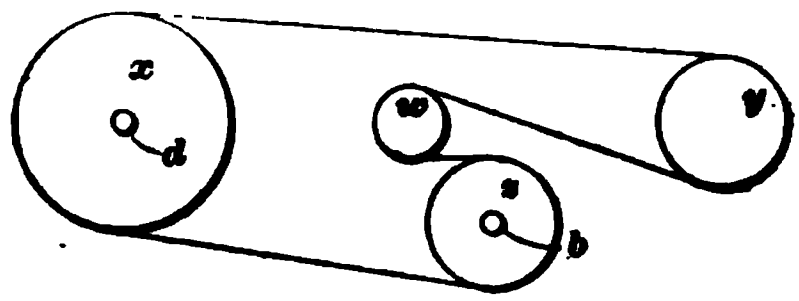

FIG. 5.

17. Feed.—Both hand feed and power feed are provided. The former is operated by the hand wheel *h* on the oblique shaft *i*, which has a worm *j* on its end that engages with a rack on the upper end of the spindle. The power feed is obtained by means of a worm on the spindle running in a worm-gear, and is connected with the oblique shaft *i* by means of the gears, worm, and worm-gear at *k*. The hand feed or power feed is thrown in as desired by means of the hand wheels *l* and *m* and the pin *n*.

In the larger sizes of this type of machine, a power traverse for the head is also furnished, taking its power from a screw in the radial arm *a*, which is connected with the vertical shaft *d* by means of a pair of bevel gears. The arm *a* and slide *s* are raised by means of a screw in the column that runs in a nut attached to the slide between the guides of the upright. The power is transmitted to this screw

through the gearing at *o*, and is controlled by the handle *p* on the lower end of the vertical rod *q*.

18. Foot-Plate and Table.—The work for which this type of drill is used is usually large and is generally supported on the foot-plate *r*, which is finished and fitted with slots for T-head bolts. The table *s* is, however, provided for smaller pieces, or pieces that require side support. It is finished and has slots for supporting work on the top and sides. For light work, its own weight is sufficient to hold it in place, but for very heavy cuts, or where there is a tendency to tip, it should be bolted down.

19. Setting the Work.—The same general rules that apply to ordinary drill-press work apply to the radial drill. The work must always be so set that there will be no spring in the piece when the clamps are tightened, and should be so placed that as much work as possible may be done without resetting.

GEAR-DRIVEN RADIAL DRILL.

20. The general type of radial drill already described is often driven by means of gearing and rods instead of the belts *u* and *c*. The power is transmitted directly from the main driving cone to a vertical rod in the center of the column, then, by means of gears at the top of the column, to a vertical rod corresponding to *d*, Fig. 4. Another pair of bevel gears connect this rod with a horizontal rod on the arm *a*, which is geared to the spindle in the drilling head.

RADIAL DRILL WITH OUTER COLUMN.

21. The type of radial drill mentioned above has acquired a large place in drilling operations, and for work where extreme accuracy is not essential, it has given excellent satisfaction. There are cases, however, where the spring of the various overhanging parts causes errors that

are objectionable, and, to overcome this spring, a supporting column at the outer end of the radial arm is sometimes added. Fig. 6 represents such a machine, which is called a **radial drill with outer column.** The column *a* with the radial arm *b* swings in an arc about the center of the main column *c*, and, when moved to the right position, it is

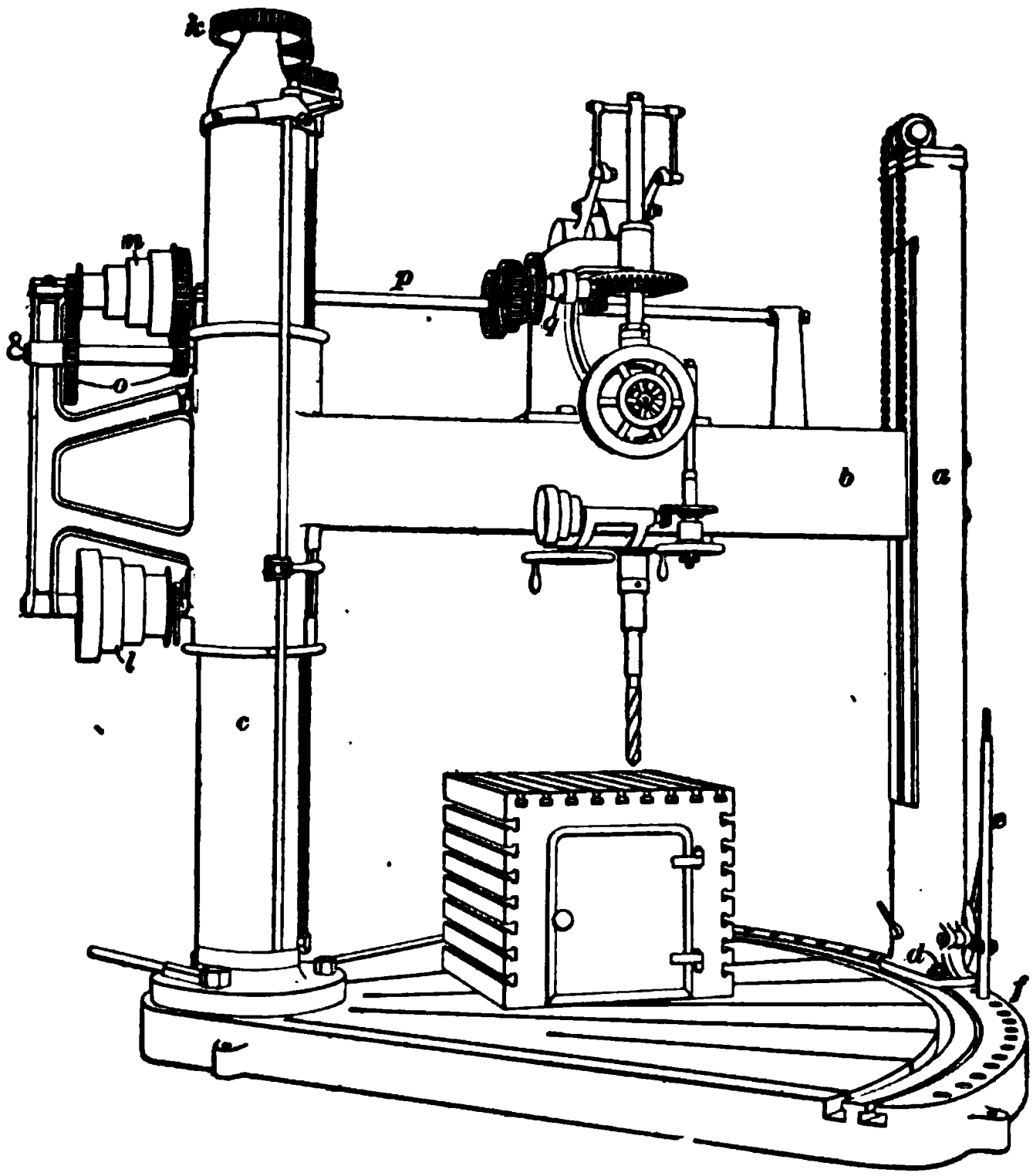

FIG. 6.

clamped to the bed by means of the bolts *d*, thus forming a solid support for the arm. A simple device for moving the outer column consists of a lever *e* linked to the foot of the column, as shown. The lower end of the lever enters a series of holes *f* in the bed, thus forming a series of fulcrums for the lever as the column is drawn along.

Aside from the outer column and the provision for moving it, this machine is substantially the same as an ordinary gear-driven radial drill. The power is transmitted to the spindle through a pulley that connects with a vertical rod in the center of the column *c*. This rod is geared to an outer vertical rod that moves with the radial arm through the gears at *k*. The power is transmitted to the cone *l* through a pair of bevel gears, thence by belt to the cone *n*, which is connected either directly or through back gears *o* to a horizontal shaft *p*, which is connected through gearing with the drilling head *q*.

UNIVERSAL TABLE.

22. It is often necessary to drill holes at an angle in radial machines. For the smaller pieces, a **universal table,** Fig. 7, may be used, upon which the piece is set and tilted to the desired angle. The table is bolted to the foot-plate by the lugs *a*, *a*. It may be turned about its center upon the circle *b*, while the top can be set at an angle, as shown, by means of the handle *c* and a worm and worm-gear *d*. Clamping bolts on each circle hold the table firmly in place when it has been adjusted to a desired position.

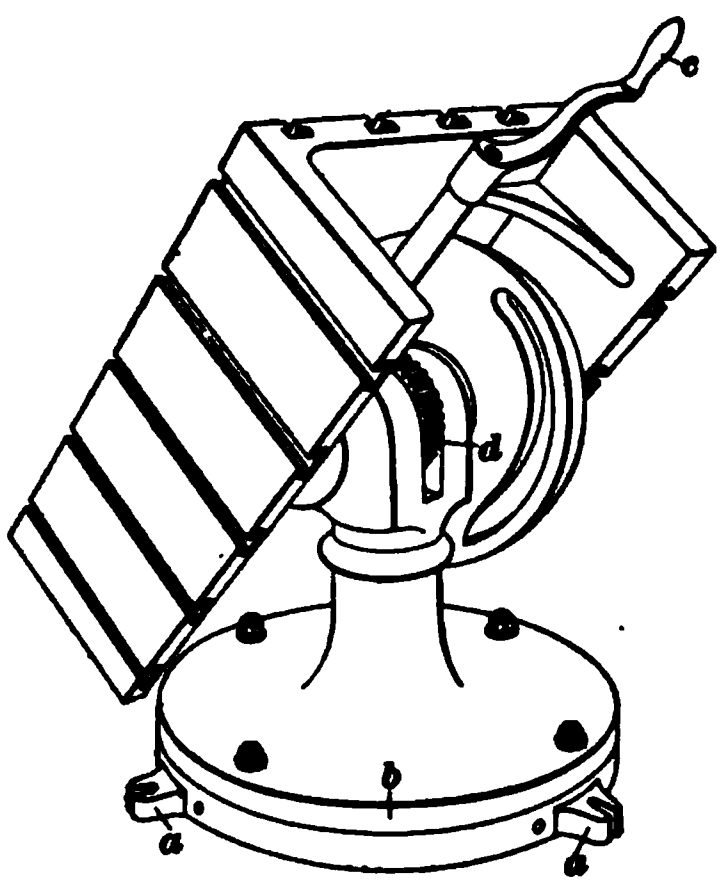

FIG. 7.

UNIVERSAL RADIAL DRILL.

23. In large work that cannot be supported upon a universal table, a radial drill with an arm that can be rotated about its own center, and equipped with a head that can be

thrown to any angle, as shown in Fig. 8, has been found very useful. The rotation of the arm is obtained by pivoting it upon the center of the shaft *c* Such a machine is called a **universal radial drill.** The circle *a*, upon which the arm is rotated, is graduated in degrees, and, as the arm may be turned through the entire circle, an adjustment to any

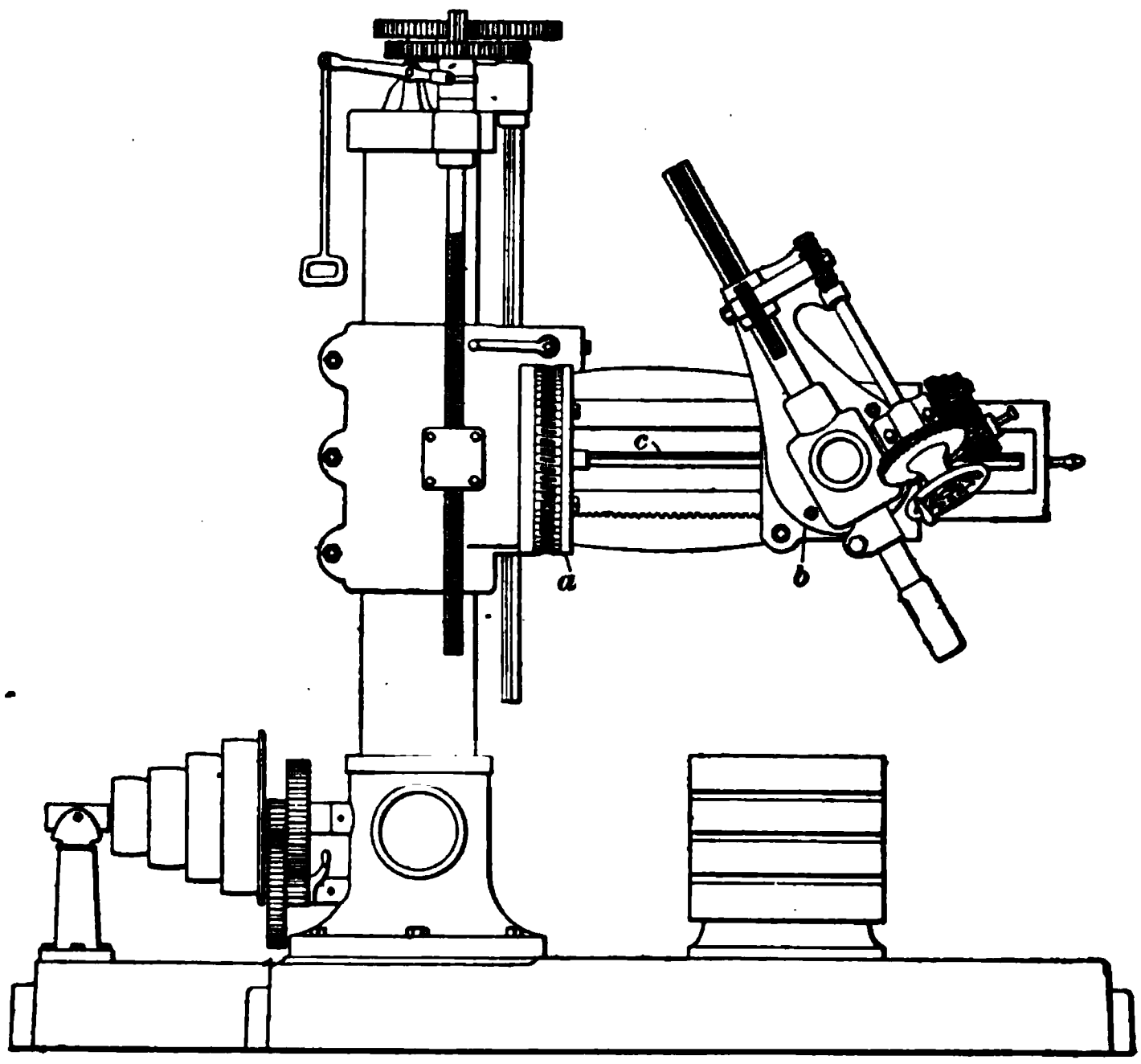

FIG. 8.

angle may be made very quickly and accurately. The circle *b* on the head is also graduated, thus furnishing a ready means of setting the spindle to almost any conceivable angle. This machine, while differing from the radial drills already described in some details, maintains the same general construction. A careful inspection of the illustration will readily explain the utility of all the parts.

OTHER VARIETIES OF DRILLS.

24. Object.—The present tendency toward specialization has brought about the use of tools especially designed to save time and prevent error in the duplicating of parts.

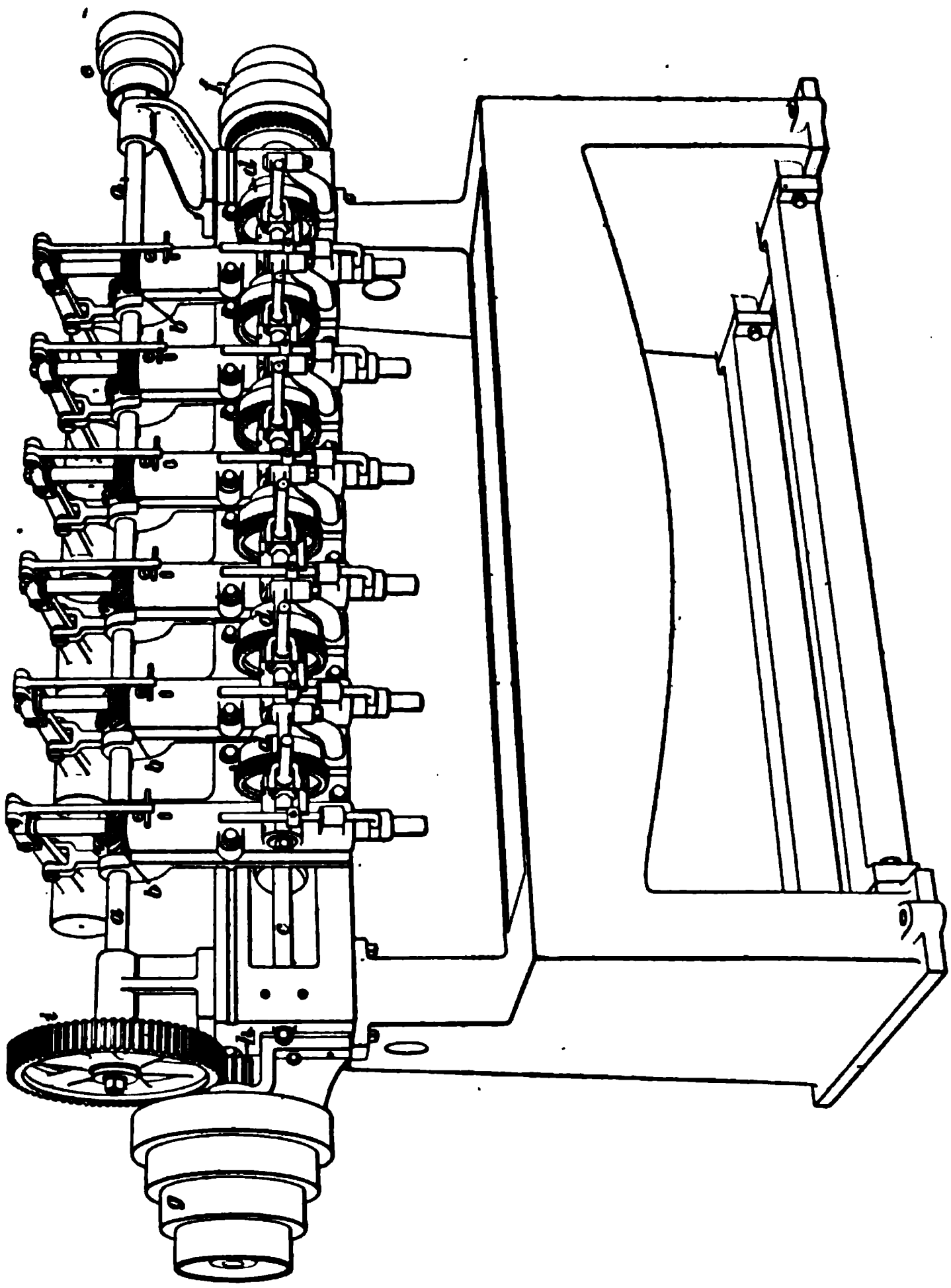

FIG. 9.

It has been found that in drilling a large number of holes in one piece, time may be saved by using **multiple-spindle drilling machines.**

25. Spindles in One Plane. — Fig. 9 illustrates a machine of this type with six spindles that have their center lines all in one plane. The spindles are driven from the same shaft *a* by means of worms and worm-gears *b*, the shaft *a* connecting with the driving cone *g* through the gears *h* and *i*. The motion for the feed is taken from the shaft *c*, running in the cross-rail, and is transmitted to each spindle by gearing and clutches at *d*, the feed-shaft *c* being driven from the shaft *a* by a belt on the cone pulleys *e* and *f*, which also furnish the variable feed.

The table on the machine shown is not movable, and only work of a moderate depth can be drilled in it. This same general type of machine is, however, frequently made with an adjustable table. The spindles can be moved along the cross-rail and adjusted to any distance apart, within the range of the machine, while any number of holes from one to six may be drilled at the same time.

This type of machine is used principally for plate work, structural iron, and other light work requiring a large number of holes in a straight line. Modified forms are used largely for drilling locomotive frames and bridge chords, and for tapping nuts in large numbers in bolt and nut factories.

26. Universal Adjustable Spindles. — Multiple-spindle drills are frequently made with **universal adjustable spindles.** The universal joints allow the spindles to be moved in and out as well as along the cross-rail. With this arrangement, holes that are not in line with one another may be drilled at one setting, or if the holes are to be tapped or reamed and are far enough apart, half the spindles may be equipped with drills and the other half with taps or reamers, so that when the holes are drilled the piece may be moved to the other set of spindles and finished without taking it off the machine.

Jigs should always be used in drilling with universal joint spindles, since the short lower bearing is liable to become slightly worn or may not be in perfect adjustment,

thus introducing inaccuracies. A well-constructed jig guides the drill perfectly and avoids this danger.

27. Vertical Flange-Drilling Machine.—A very useful multiple-spindle drill is shown in Fig. 10. Here the spindles may be adjusted about the center of the main driving spindle *a*. The drill spindles are all equipped with

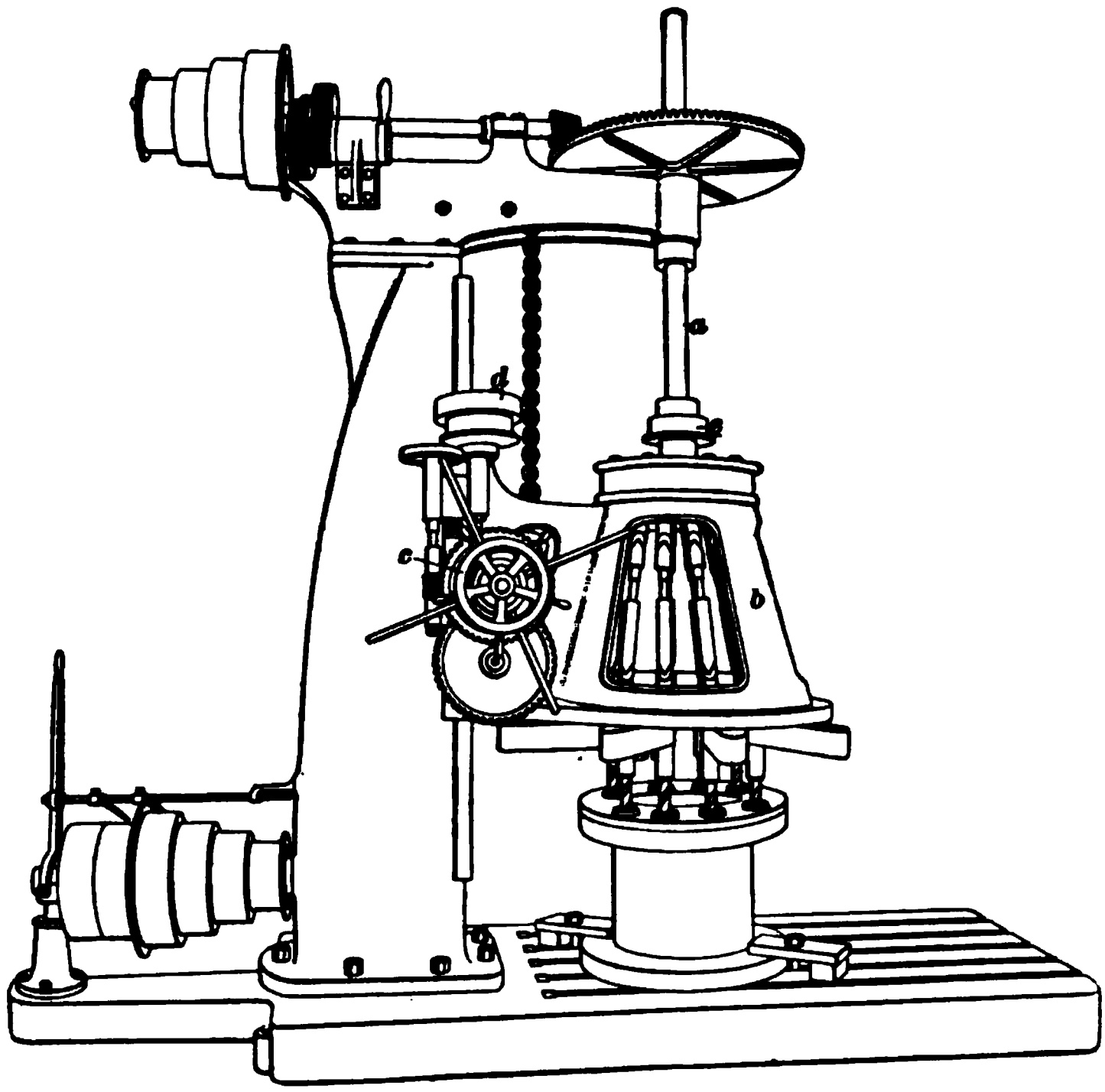

FIG. 10.

universal joints and each one moves independently of the others. This enables the machine to drill as many holes as there are spindles in one circle, or the spindles may be arranged in two or more circles or set irregularly, as desired.

This machine is designed for drilling engine cylinders, pipe flanges, valve bodies, etc., but it may be used for almost any work where such a grouping of drills is desirable. The illustration shows a piece of pipe clamped upon the drill

table with jig attached and drills inserted, ready for drilling. The power is transmitted to the spindles by a spur gear on the main spindle *a*, and a small pinion on the upper end of each of the drill spindles enclosed in the upper part of the head *b*. The drill spindles are held vertically in both the upper and lower bearings. The feed is obtained by lowering the entire head *b*. This may be done either by means of the pilot wheel *c*, or by power by means of a belt running on the cone pulleys *d* and *e*.

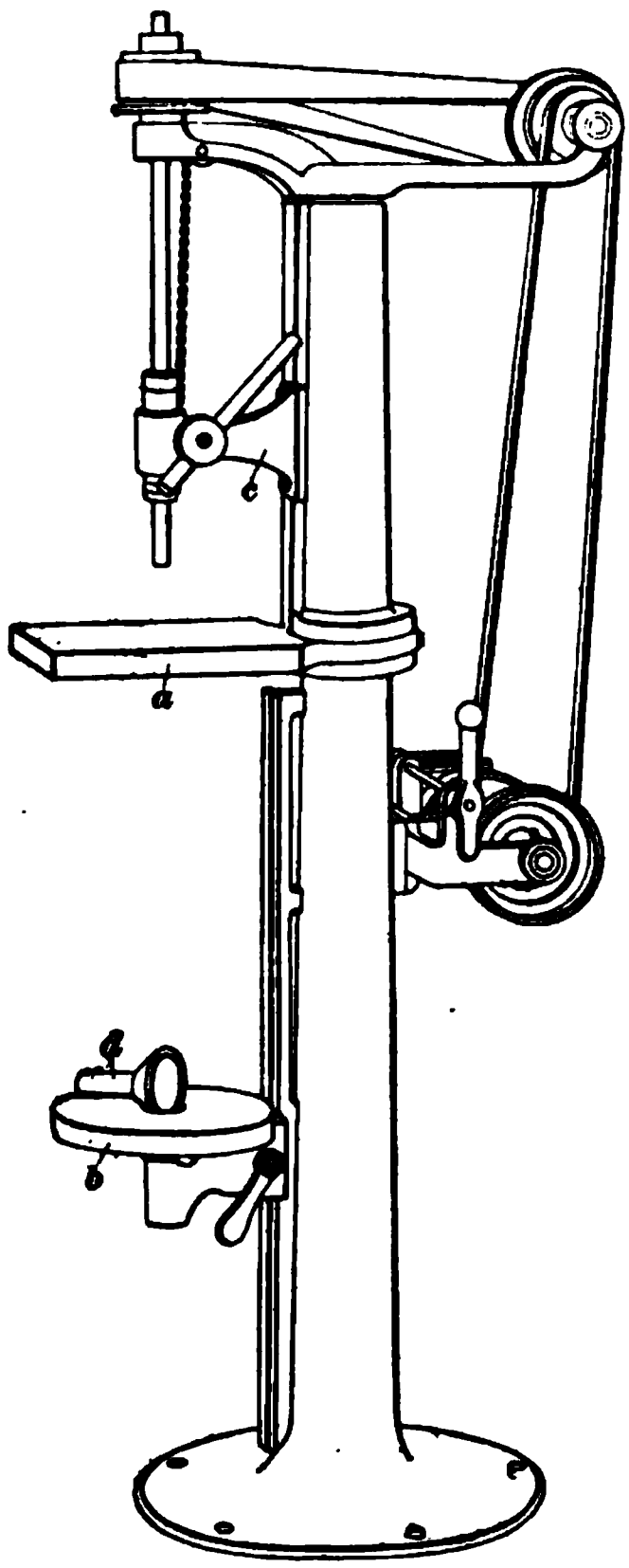

FIG. 11.

28. Horizontal Flange-Drilling Machine. — Multiple-spindle drilling machines with two heads set horizontally upon a long bed, intended especially for drilling the two ends of engine cylinders, pipes, etc. at the same time, have recently been placed on the market. The construction of the heads is practically the same as that shown in Fig. 10, the only difference being that they are placed horizontally on the bed. The work is held on a table between the two heads.

SENSITIVE DRILLS.

29. The drilling machines already described have been designed for the heavier grades of work. There is, however, a large amount of light work in a machine shop upon which drills must be used, and which is too small to stand the strain of heavy machines. This has led to the development of a lighter and more sensitive class called **sensitive drills.**

Fig. 11 illustrates a machine of this class. The power is transmitted directly to the spindle by means of belts, while the speeds are varied by the use of the ordinary cone pulleys. The feed is of the simple, hand-lever, pinion-and-rack type, already described, which is the most sensitive arrangement in use, any variation in the working conditions of the drill point being readily felt with the hand upon the lever. The table *a* of the drill shown has no vertical adjustment, but may be swung about the center of the post, out of the way of the center line of the spindle, so as to permit long pieces to be set upon the lower table *b*. The lower table and the lower spindle bracket *c* are both adjustable vertically, thus permitting pieces of greatly varying lengths to be taken into the machine.

This class of machine is used largely for center drilling in shops where a special machine for this purpose is not available. The funnel-shaped piece *d*, commonly called a *cup center*, is a special device for centering the lower end of a shaft that has been cut off straight. The shank is set in a hole in the center of the lower table *b*, the center line of which coincides with the center line of the spindle. The cupped-out top of *d* is made a perfect internal cone, with its axis in the center of rotation of the spindle. A shaft that is set into this cup and is held with its center under the drill at the upper end will, therefore, have its center line in the axis of rotation, and a hole drilled into it, when held in this position, will be concentric with the outside of the shaft throughout its entire length.

PORTABLE DRILLS.

30. Introductory.—In recent years there has been a marked development in light, portable machines for drilling and kindred purposes. The extreme lightness of their construction and the small space that they occupy have made them available for much of the work that was formerly done by hand, and a large amount of time and hard labor may

be saved through their use. Most of these machines are so light that they can be carried about and operated by one man.

31. Classes of Machines.—These machines may be classed under three heads, deriving their names from the manner in which they are driven, viz.: *pneumatic drills*, *electric drills*, and *flexible-shaft drills*.

32. Pneumatic Drills.—Portable pneumatic tools are made in a large number of different forms. Some are

FIG. 12.

driven by means of oscillating cylinders, others by means of vanes, acting through gearing that gives the proper reduction of speed.

Fig. 12 shows one of the oscillating cylinder type set up for drilling. The cylinders and gearing are enclosed in a case *a*. The air, which for this class of work is generally compressed to about 80 pounds per square inch, is brought from the air compressor or storage reservoir to the drill through a rubber tube *b*, the tube usually being protected by means of wire wound spirally about it. The drill is

fed by means of a screw *c* and is operated as indicated in the illustration. The air is turned on or off and the flow regulated by means of a valve *d*, which is controlled by the hand of the operator. This type of machine will drill and ream holes up to 3 inches in diameter, and may be used for various other operations, such as tapping, grinding steam joints, boring in wood, etc.

33. Electric Drills. — Electric machines that are used for the same operations embody the same general

FIG. 13.

features as the pneumatic machines, the difference being that an electric motor is substituted for the air motor.

34. Flexible Shaft.—Fig. 13 illustrates a **flexible shaft** and drilling machine set up ready for use. The power is transmitted to the shaft through a rope drive, the rope running from the pulley *b* on the driving end of the shaft, over a pair of idlers *c* hung from the ceiling, to a pair of idlers *d* attached to the floor, as shown, thence to the pulley *e* on the countershaft. By either lengthening or shortening the rope attaching the idlers *d* to the floor, the pulley *b* may be moved to any location within the reach of the driving rope. A variable speed is obtained by means of the step pulley *e*. The shaft is made by winding successive layers of wire in opposite directions about a center wire, as shown in Fig. 14, the outside being covered with leather.

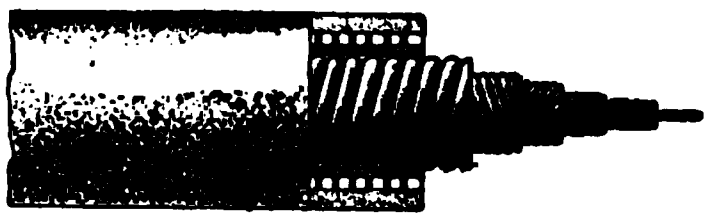

FIG. 14.

35. Drilling Machine.—The **drilling machine** used with the flexible shaft is shown in Fig. 15. It consists of a pair of bevel gears *a* and *b* mounted in a frame *c*, a spindle *d*, feed-screw *e*, and wheel *f*. The bevel pinion *a*, which is covered by a guard, is attached to the flexible shaft, while the bevel wheel *b* is splined upon the spindle *d*. The drill is held in the spindle in the usual way.

The illustration shows how the machine is set up for drilling with the flexible shaft, by means of which it may be operated at any angle. This machine may also be used for drilling horizontal holes in a vertical drill press, or for drilling vertical holes in a horizontal machine, by attaching it directly to the drilling-machine spindle instead of the flexible shaft.

36. Electrically Driven Flexible Shaft.—When there is no running shaft available, the flexible shaft may receive its power from any convenient portable source, as a small electric motor mounted upon a suitable truck. The shaft is connected to the motor by means of a universal joint, in order that the arrangement may be as flexible as possible.

37. Heavy Portable Machine Tools. — The tendency toward larger units in manufactories of various sorts has introduced a new phase in machine-tool operations. Parts that are too heavy to be machined in the ordinary

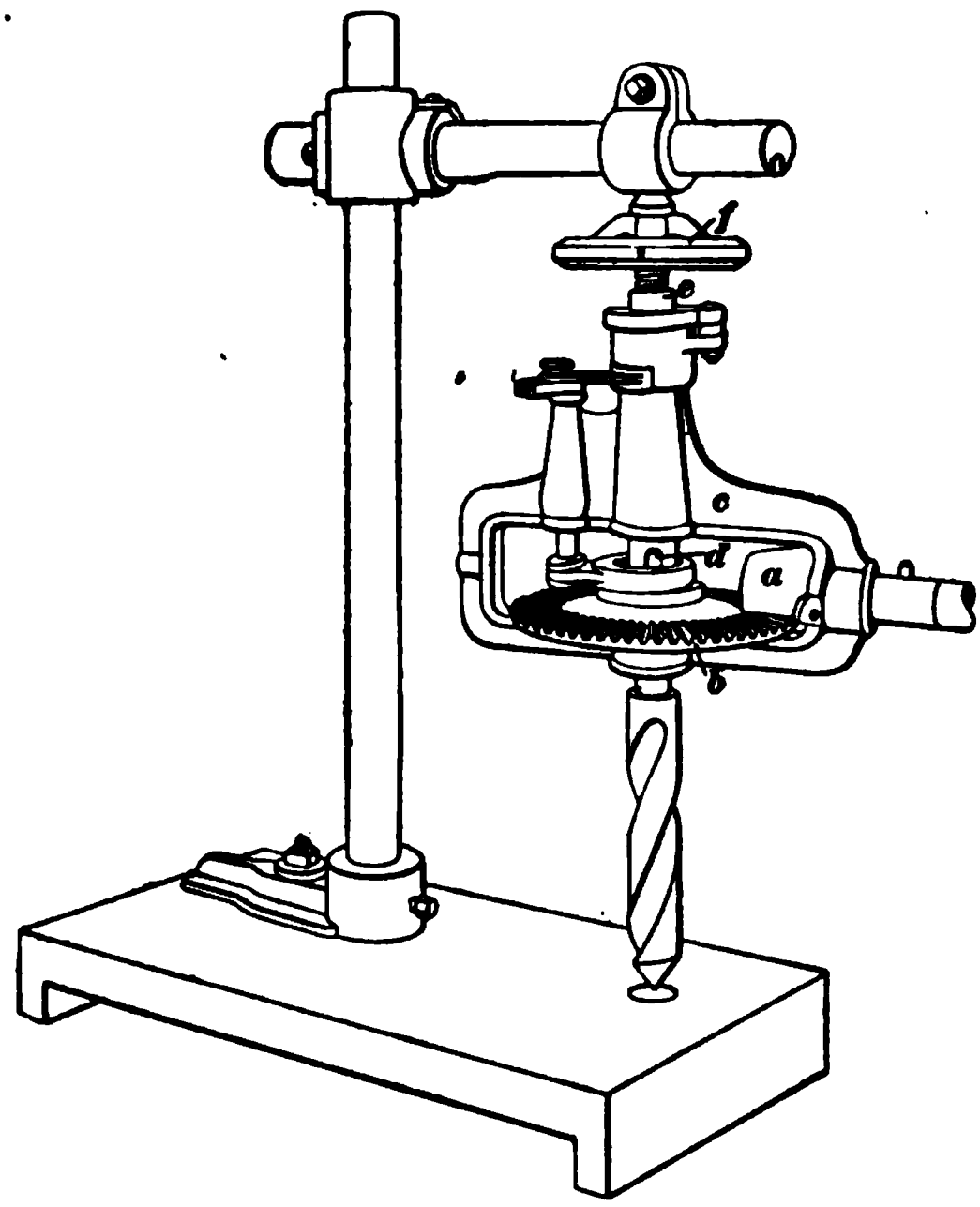

FIG. 15.

stationary machine tools are now met with quite commonly in machine shops. This has led to the use of large cast-iron floors upon which the work is placed, and portable machine tools, which may be carried to the floor and set up in any position to accommodate the work.

Fig. 16 illustrates a case where a 135-ton flywheel was to be drilled at intervals along the rim for the purpose of joining the sections in which it was cast. The individual parts were machined and fitted together, but, to make the joints, several 2-inch holes had to be drilled through 26 inches of solid metal. An ordinary radial drill was lifted from its

base and set upon the rim, as shown. When the holes at one joint were drilled, it was moved to the next joint and the operation repeated, until all the joints were completed. A

FIG. 16.

rope drive was used in transmitting the power to the drill. The idlers were attached at the center of the wheel, thereby making it possible to move the machine to any point on the rim without changing the length of the rope.

BORING MACHINES.

INTRODUCTORY.

38. It has already been stated that the machine tools of the present day have their origin in the lathe, which stands out as the parent machine tool. Some of the different machines developed have passed through various stages and forms in the course of their evolution and have become distinctive types in themselves, bearing in their general appearance no resemblance to the machine from which they were derived.

This is especially noticeable in machines used in boring operations, these being regarded by the present-day observer as a distinctive type of machine tool in themselves. Two subdivisions have even been made, each division representing a type of boring machine adapted to a certain class of work. These two types, namely, *vertical* and *horizontal boring machines*, are so widely different in their construction that the most careful observation is necessary to establish their relationship. While they are known as boring machines, they both perform other operations. The vertical type is designed for turning as well as boring, and is often called a *boring and turning mill.* The horizontal type usually performs drilling and some classes of milling operations, as well as boring, hence the name *horizontal boring, drilling, and milling machines.*

VERTICAL BORING MACHINE.

GENERAL DESCRIPTION.

39. Introductory.—Fig. 17 represents the ordinary **vertical boring** and **turning mill** found in up-to-date machine shops. The work is clamped upon a rotating table *a*, which is provided with slots for T-head bolts and a circular hole in the center, as shown. The cutting is done by

means of tools in the lower ends of the boring bars *b*, *b*, there being on the machine illustrated two of these bars carried in two saddles upon a cross-rail *c*.

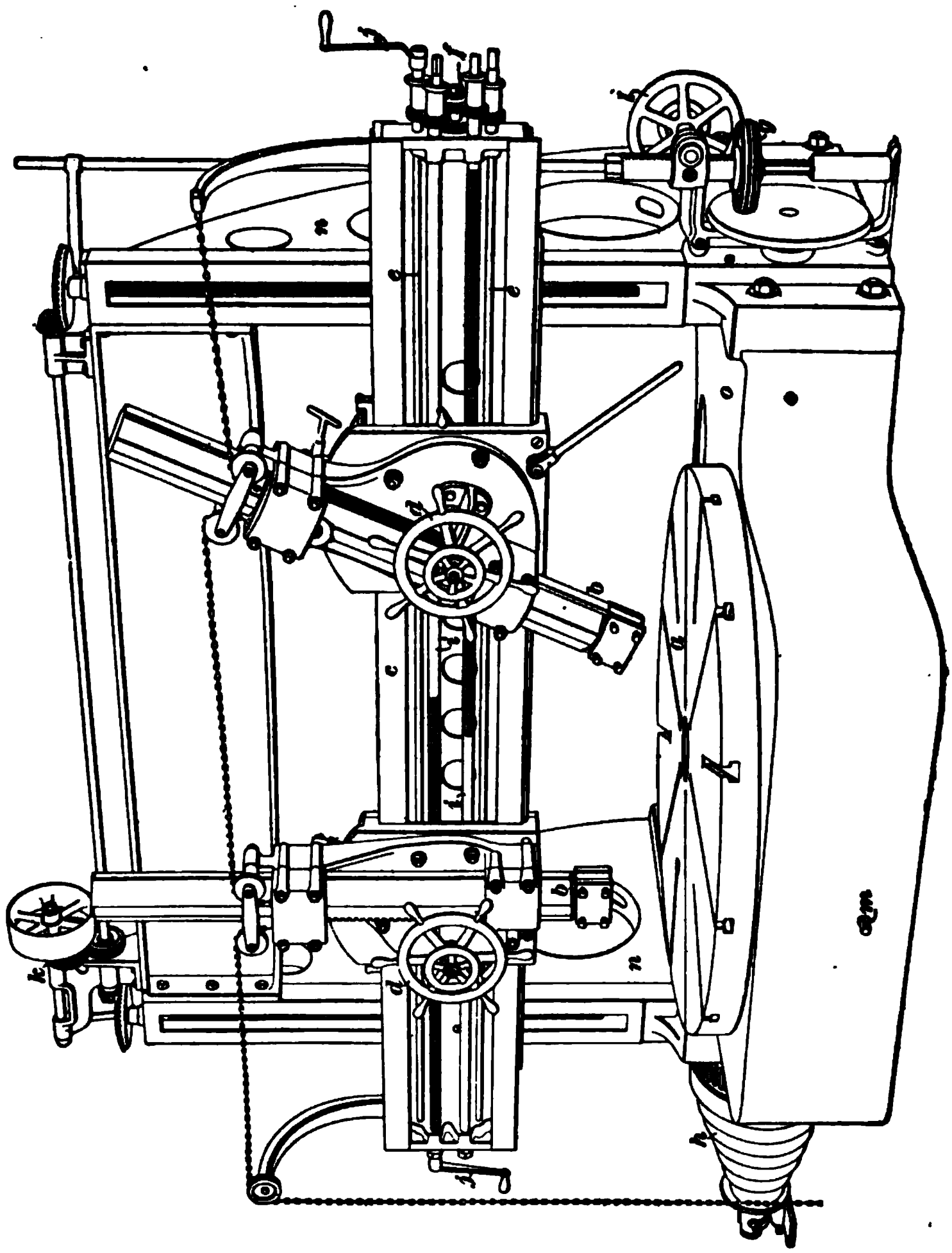

FIG. 17.

40. Control of Cutting Tools.—The tools are raised and lowered by means of the hand wheels *d*, *d*, or by power through the rods *e*, *e*, which are geared to the boring bars

and connect by means of gearing at *f* and a friction wheel and disk at *g*, through the bed of the machine to the driving cone *h*. The tools are fed horizontally by means of the screws *i*, *i*, which traverse the saddles upon the cross-rail. These screws may be operated either by hand, with the handles *j*, *j*, or by power through the gearing at *f* and friction wheel and disk at *g*, already referred to. Reversing devices are provided, and the whole machine is entirely under the control of the operator. The cross-rail is raised and lowered by power through the pulley and gearing at *k*.

41. Control of Feed.—The rate of feed is regulated by the friction wheel and disk at *g*. The wheel can be raised and lowered by turning the hand wheel *l*, while the position of the disk does not change. It will be seen that as the wheel approaches the circumference of the disk, it will make more revolutions per revolution of the disk than when near the center. When the wheel is carried below the center of the disk, the direction of motion is reversed, while the same range of speeds is obtained by moving it toward the circumference. A great variety of both vertical and horizontal feeds in either direction is thus obtained, while clutches and reversing mechanisms in the saddles place the tool perfectly under the operator's control. Counterweights are provided wherever possible, in order that all parts may be operated easily.

42. Arrangement of Feed. — The feeds are so arranged that one tool may be turning the outside of a piece while the other is boring, or they may both be either boring or turning on the same or different diameters, or one tool may be facing the top while the other may be either boring or turning. When working on different diameters, the tool on the smaller diameter has a slower cutting speed than that cutting on the larger, and the speed must, therefore, be adjusted for the larger diameter. These operations are virtually the same as those carried on in the lathe, and the tools used for these operations in the two machines are identical.

43. Table.—The **table** is rotated by means of an internal gear on its lower side, and a pinion that is connected through a pair of bevel gears to the driving cone *h*. A back gear like that on a lathe is provided, which, with the different steps on the cone, furnishes a wide range of speeds.

The table is supported in the center upon a long vertical spindle running in a bearing near the top and another bearing at the bottom, while a step bearing at the lower end takes the thrust. The rim of the table runs in a groove in the bed, which is flooded with oil, and, when running slowly on heavy work, the greater part of the weight is taken on this rim.

Provision is made for raising and lowering the table when running at high speeds on light work, so that the entire load is taken by the spindle. A screw *m* connects with a wedge under the thrust bearing by means of a nut and lever, and, by turning the screw in one direction, the wedge is forced in, while rotation in the opposite direction withdraws it. Conical turning or boring may be done by setting the head at an angle, as shown at the right hand of Fig. 17.

EXTENSION BORING MILL.

44. In shops where there is occasionally a piece of large diameter to be turned, but where there is not enough of this class of work to warrant the purchase of a large boring mill, an **extension boring mill** may be used to advantage. On an extension mill, the bed *o*, Fig. 17, is made with an extension at the back and ways on top, on which the housings *n* rest, and on which they may be moved back, so as to accommodate a larger piece upon the table. The cross-rail is, of course, carried back with the housings, and, in order to do boring, it is necessary to use a vertical boring bar supported from an arm attached to the cross-rail and resting in the center of the table. As the table revolves, the bar must stand still. A hub at the center of the work may be faced by using an ordinary facing head, such as is used in facing

the ends of cylinders on a horizontal boring mill. This simple provision in a mill designed for the average work of a shop will enable larger pieces to be machined at a comparatively small increase of cost for machine tools.

BORING AND TURNING OPERATIONS.

45. Setting the Work.—The horizontal table of the boring mill makes the setting of the piece differ from that of the lathe and resemble the setting upon the drilling-machine table. The piece must, of course, be set perfectly central with the center of rotation as in the lathe, and must be blocked up and clamped as on a drilling-machine table, or set in jaws as in corresponding lathe operations. When turning and boring a flat part, as an engine-crank disk, for instance, the part is held in jaws precisely as a piece of similar form would be held on a lathe face plate. When the center of such a piece has been bored, the top faced, and as much of the outside turned as the jaws will permit, the piece is turned over, trued up with the center, again gripped in the jaws, and the remaining parts finished.

When a piece is held in this way, it is always well to use one or more drivers, to prevent the piece from yielding to the tangential pressure of the tool and slipping in the jaws. Irregular pieces call for some ingenuity on the part of the operator, but the principles involved are the same as those in the case described.

46. The following principles may be taken as a guide in all emergencies. The piece must always be set with the circumference to be finished exactly concentric with the center of rotation, and the center line must be perpendicular to the plane of the table. If the lower surface is irregular, it must be blocked up, so that the conditions mentioned above are true, and must then be either gripped with jaws or clamped as in the drill press, drivers being provided to take the twisting strain. The drivers may be simply angles, or any devices to prevent the part from turning on the table.

Care must also be taken so that the piece shall not be sprung out of its true shape when clamped down.

47. Example of Setting.—Fig. 18 illustrates how an irregular piece may be secured on the table. Before setting a piece, the table must be carefully cleaned and lowered so that the weight is taken on the outer rim. When this is neglected, there is danger of injuring the step bearing and also of springing the table. The piece is then placed on the table, set approximately central, and leveled up by blocking at regular intervals. In Fig. 18, screw jacks *a* are used in leveling up. When the piece is approximately level, a tool

FIG. 18.

is brought very near the circumference to be turned, and the table is rotated slowly. Careful observation of the distance between the part and the tool will show in which direction it must be moved in order to bring it perfectly central. At the same time, the distance from the tool to the upper surface may be observed and the piece brought level as well. Several trials may be necessary before the correct position is obtained. Jaws *b*, which are supported upon extension arms *c*, which in turn are bolted to the

table *d*, are used for centering and clamping. The jaws are equipped with adjusting screws *e* to control the grip *f*. The jaws are also provided with clamping bolts (not shown) by means of which they are secured after being adjusted.

48. All adjustments having been made, two drivers, one on each side of the center, are set against any available surface. In the illustration, an angle *g* is set against a lug *h* and is clamped on the table, as shown. The piece having now been properly secured, it may be well to test the setting again, and to look over all bolts, so as to be sure that every part is fastened securely, after which the machine may be started, the speeds properly adjusted, and the tools fed as required. The cutting conditions are the same as in a similar operation in a lathe.

The piece shown is held by three vertical jacks *a*, three jaws *b*, and two drivers *g*. On pieces where a flange or any other surface upon which a clamp may secure a hold is available, clamps are used in preference to the jaws, drivers being applied to prevent any sliding on the table. In some cases, the weight of the part, together with the clamp, furnishes grip enough on the surface of the table to prevent any slipping, but this grip is very uncertain, and it is better not to depend on it entirely. Other special boring operations are described in *Drilling and Boring*, Part 3.

HORIZONTAL DRILLING AND BORING MACHINES.

49. Introductory.—Horizontal drilling operations are so closely associated with horizontal boring that they will be considered together. Nearly all horizontal machines are designed for drilling, boring, and milling, the spindle being designed for any of these operations. The economy of such an arrangement is evident when it is considered that the boring operation requires that a hole, sufficiently large to permit a boring bar to be passed through it, be previously formed, either by coring or drilling.

Small holes, up to about 2 inches in diameter, are usually drilled, and a machine that will do both the drilling and boring with one setting saves a large amount of time. Resetting, or moving to another machine, frequently takes more time and requires a larger number of men than the drilling or boring, while in the meantime the machine is standing idle and the additional service of a power crane is often necessary. For this same reason, it is an advantage to be able to perform a milling operation at the same time. It will be observed that these three operations require practically the same spindle action, and can, therefore, be carried on in the same machine. It is economy to have machine tools so arranged that the greatest possible amount of work may be done with one setting. This should always be borne in mind when selecting and arranging machines, as well as in their operation.

50. Drilling and Boring.—It has already been stated that **drilling** consists of sinking circular holes in solid material. **Boring,** as understood in a machine shop, consists of enlarging and truing a hole that has previously been made. This is done by supporting, independently of the piece to be bored, a bar that carries one or more cutters. The center of the bar thus forms the center of the bored hole independently of the center of the original hole. Where the center of the new hole does not correspond with the center of the original hole, the heavy cut on one side will cause the bar to spring and the hole will neither be perfectly round nor straight. One or two light cuts after the roughing cut has been taken usually true it up. When the cut is uneven, therefore, provision should be made for a finishing cut by using a cutter slightly smaller than the desired hole for the first cut.

51. Simple Boring Bar. — There are two different styles of bars used in this operation. The simplest of these is used almost entirely for the smaller holes, and resembles, in construction, the counterbore already described in Art. **69,** *Drilling and Boring*, Part 1.

Fig. 19 represents this type of bar. The end *a* is made to fit either the spindle or some device attached to it. The bar should be as large as the hole will permit, in order

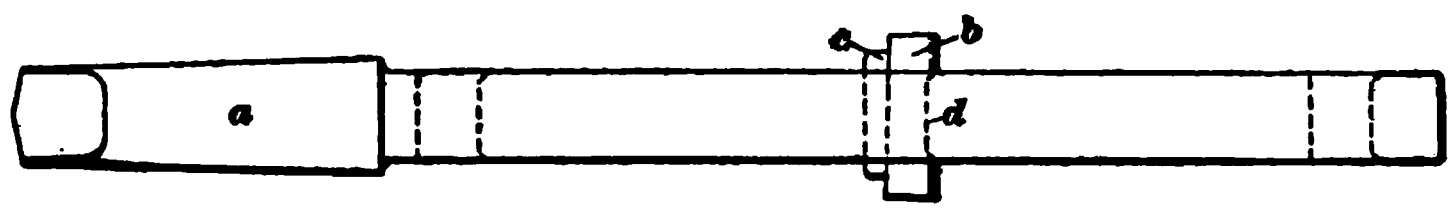

FIG. 19.

that the spring may be reduced to a minimum. The material for the bar should be selected with a view to its stiffness. For the larger sizes, cast iron is often used because of its great rigidity.

52. Cutter Slot, Cutter, and Key.—At the middle of the bar, a rectangular slot is formed to receive the cutter *b* and a key *c*, which holds the cutter in place. The back of the cutter and the front of the key are slightly tapered in order to wedge the key in the slot, the two ends of which are parallel and perpendicular to the center line. When the cutter has been fitted, it should be turned up in the bar, making the ends parallel. The cutting should all be done on the front edges, which are formed with the proper clearance angles. The outer corners are usually rounded slightly.

When no adjustment of the cutter is required, it is well to fit it into the slot with a slight taper running from the outside of the bar, as shown by the dotted line *d*. This enables it to be removed and replaced, or allows other cutters that have been similarly fitted to be inserted in its stead. This will not do for cutters that require adjustment, as the tapered sides hold them firmly in one position. This advantage is, however, so great that it is generally thought better practice to have a set of cutters of different sizes properly fitted to the bar than to use the adjustable form.

53. Location of Cutters.—The cutter is placed at the middle of the bar, since this type travels through the work. The work extends its full length beyond the cutter in both

directions as the latter reaches the ends of the work. A pair of slots similar to that at the middle are put near the ends of the bar, where the ends of the piece are to be faced, and facing cutters are inserted. Thus, the boring and facing will be done with the same bar and with a single setting of the piece.

54. Length of Bar.—This type of bar should be somewhat more than twice the length of the work, in order that there may be room for setting the cutter when the work stands at either end.

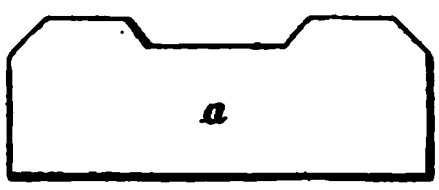

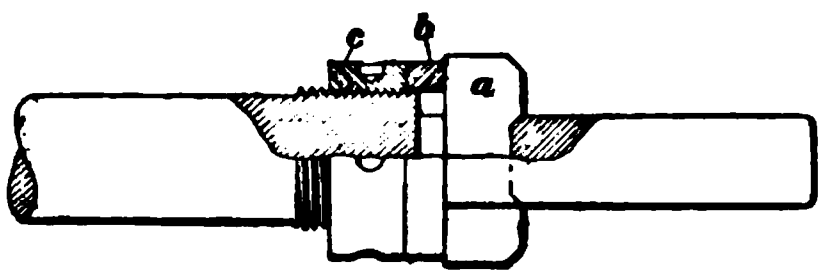

FIG. 20.

55. Nut Support for Cutter.—Another boring bar and cutter of this same class, that possess some excellent features, are shown in Fig. 20. The cutter *a* is notched with tapered sides to fit corresponding tapers on the bar, as shown. A nut *c* and collar *b* are used to hold the cutter instead of the ordinary key. A better support for the cutter is thus provided, while the danger of injury due to the use of the hammer in setting the cutter is entirely eliminated.

56. Boring Bar With Traveling Head.—Another form of boring bar that is used in boring holes of comparatively large diameter is shown in Fig. 21. The bar *a* is usually made of cast iron, cored out so as to furnish the greatest stiffness with a minimum weight. A head *b* is bored to fit the bar and turned on the outside to a diameter somewhat smaller than the diameter to be bored. One or more boring tools *c* are let into the head, as shown, and are held in place by the straps and tap bolts at *d*.

57. Boring Head.—The head is traversed by means of a screw *e*, which runs in a slot in the side of the bar, and a

nut on the inside of the head. The slot is made large enough so that the nut is free to travel from end to end as the screw is rotated. The head is rotated with the bar by means of a key in the head and a spline that runs the entire length of the bar, diametrically opposite the feed-screw. Bearings *f*, *f* support the screw at each end, while it is rotated with reference to the bar by means of a star feed, acting through the gears at *h*.

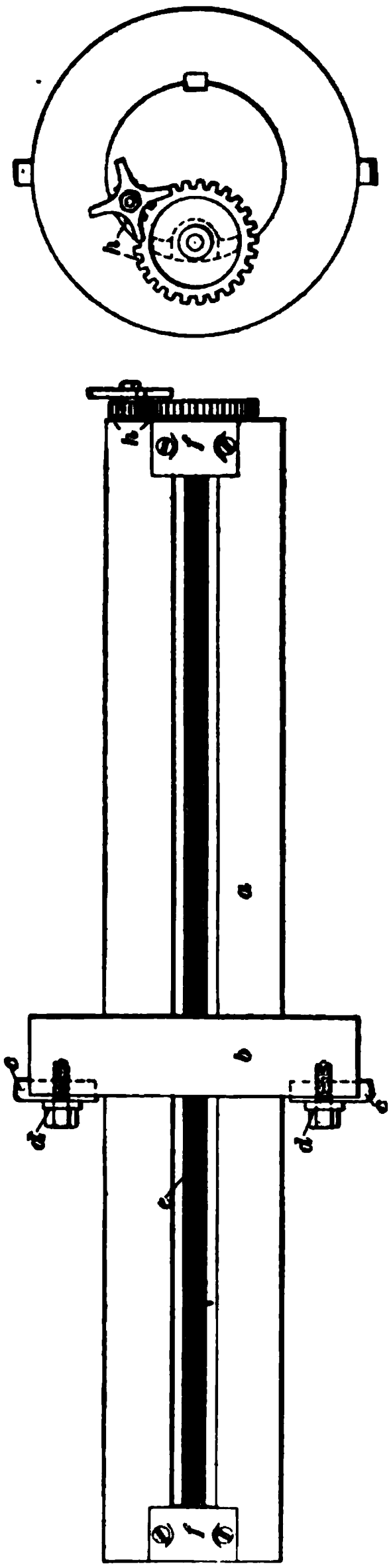

FIG. 21.

58. Rotation of Bar and Support of Outer End.—The bar is rotated by attaching it to the spindle of a boring mill, or by means of special gearing. The outer end of the bar is supported by a bearing carried upon a pedestal that can be moved on the floor to suit the position of the head, and adjusted to any desired height.

59. Facing Head. — This type of bar is generally equipped with a facing head, as described in Art. **70,** that is clamped to the bar, as shown. This head receives its feed in the direction of the length of the bar by moving the whole bar and spindle endwise. The facing tool is fed radially by means of a star feed, as described in the article mentioned.

SIMPLE TYPE OF HORIZONTAL DRILLING AND BORING MACHINE.

60. Head.—One of the simplest types of drilling and boring machines is illustrated in Fig. 22. The general arrangement of the **head** resembles very closely that of a lathe, the cone pulley and back gear being the same. Instead of the ordinary face plate, there is an attachment on the

FIG. 22.

end of the spindle for supporting either a drill or a boring bar. The spindle runs through the center of the cone and is so splined that, while it rotates with the driving gear, it may be fed through it by means of the screw *a*, which is turned either by the hand wheel *b* through the shaft and gearing shown or by power through the gearing at *c*.

61. Boring-Bar Support.—An outer bearing *d* forms a support for the outer end of the boring bar. Slots *i* and *j* in the head and the side of the table, as shown, permit this bearing to be moved as near to the work as possible, in order to prevent any unnecessary spring in the bar.

62. Table.—The **table** is supported at the outer end and provision is made for vertical, side, and longitudinal adjustment by means of the screws *e*, *e*, *f*, and *g*, respectively.

63. Setting the Work and Tools.—The work, which is set upon the table *h*, can be drilled and bored in

one position, then moved to another position and the operation repeated without resetting. The work is fastened on the table precisely as it is on a vertical drill, care being taken to have the center line of the hole in perfect line with the center of the spindle. It is well, also, to guard against the work slipping endwise by setting a dog, or other support, solidly against each end. The tools used in this style of drill, aside from the boring bar, are the same as those used for similar operations in the machines already considered.

POST DRILL.

64. Another form of machine that is used very largely in machine shops for work not requiring extreme accuracy is shown in Fig. 23. The driving parts are supported

FIG. 23.

on two posts, which give this class the name of **post drill.** The spindle *a*, with the driving part *b*, may be adjusted

vertically by means of a rack *c* on the post, while the work, which is set upon a table *d* equipped with wheels and mounted upon a track, is adjusted horizontally by moving the entire carriage along the track. In the machine shown, the carriage is moved by means of a bar that fits the holes shown in the hub *e* of the wheel nearest the post. The machine is driven by means of a belt *f*, which runs over an idler *g* and a driving pulley on the spindle *a*, then over another idler *h*, down through the floor, and up again at *i*.

The essential features of the driving mechanism are the same as in horizontal boring and drilling machines, although the details are necessarily quite different.

This machine is used very largely for drilling flanges, spot facing, etc., and is especially useful on parts that are too high to be drilled in an ordinary machine tool. The posts are carried high enough to accommodate any work that can be handled in the shop, the tops being supported by means of braces carried from the side walls or ceiling.

HORIZONTAL FLOOR MILLS.

65. General Arrangement.—A type of horizontal boring, drilling, and milling machine that is used quite extensively in shops doing heavy work is illustrated in Fig. 24. The boring bar *a* and feed mechanism are carried in a head *b*, supported on a column *c*, which, in turn, rests on the bed *d*. The power is transmitted to the machine through the cone pulley and back gear at *e*, and is carried by means of shafting and gears to the boring bar. The machine is so constructed that the head may be moved vertically on the column, and the column horizontally on the bed, while the boring bar moves in and out through the head.

The work is set on a floor *h*, which is provided with T slots, as shown. The outer end of the boring bar is supported in a bearing *f* mounted on the column *g*, which rests

on the floor. The column and bearing may be moved to any location on the bed, and adjusted to any desired height.

FIG. 44.

66. Floor.—The **floor** of this type of machine is sometimes made very large, so as to accommodate more than one machine. A good arrangement consists of two machines set at right angles to each other, the one being of a heavy class designed principally for boring on large

FIG. 26.

diameters, while the other is somewhat lighter and is especially adapted for drilling operations.

67. Double-Head Machine.—Machines have been designed with a heavy boring head on one side of the column and a drilling head on the other, with the driving mechanism so arranged that either one can be thrown in at will. With this arrangement, only one head can be operated at a time, and the experience of users of such a machine seems to indicate that better results are obtained by mounting the two heads on separate columns, so that both may be operated at once.

68. Setting and Fastening Work.—The same principles that have already been mentioned in connection with the securing of the work on the tables of other machines apply to this class of machine as well. It is necessary to set the work perfectly level, and to line up the center line of the proposed hole with the center line of the boring bar. Parallels and blocks, or wedges, are used to raise the work to a suitable height, and to level it up. When it is properly set, clamps are applied, as shown in Fig. 25.

69. Example of Setting Up and Fastening Work. Fig. 25 represents an engine bed set up on a large floor and being operated on by a boring bar connected with a large horizontal boring machine. The bed *a* is mounted on parallels *b*, *b* near each end of the bed, which are clamped to the floor plate by means of the clamp *c*, and the bed is clamped to the upper parallels with the clamps *d*, *d*. A pair of pipe jacks *e*, *e* running out from the corners, as shown, guards against both side and end motion. A duplicate set of parallels, clamps, and jacks, at the other end, which is not shown, holds the bed rigidly in place.

70. Arrangement of Boring Bar and Cutter.—The illustration shows the boring bar *f*, the boring head *g* with two tools *h*, *h* in position, the traversing screw *i*, the outer bearing *j* with the front of its supporting column *k*, the facing head *l* with the tool *m* clamped on the tool slide *n*,

the feed-screw *o*, the star *p*, and the star feed-post *q*, the last being bolted to the floor.

The boring bar is connected to the spindle by means of a special socket *r*. One end of the socket fits the spindle and the other end is bored out to receive the boring bar, which is gripped and held central by means of four setscrews *s*. The illustration shows a typical piece of work for this class of machine, and the usual method of supporting and holding it.

MILLING OPERATIONS IN BORING MILLS.

71. The milling done in horizontal boring machines is similar to that done in the heavier types of milling machines. Solid cutters are used for the smaller work, and large inserted-tooth cutters, resembling the heads used on rotary planers, are usually employed in facing large surfaces. The horizontal boring machine is especially well adapted for facing irregular surfaces, the horizontal and vertical feeds being so arranged that either one or both may be thrown in at the same time, thus permitting any path within the range of the machine to be followed.

CYLINDER BORING.

72. Setting Up Work. — Engine, pump, or other cylinders in which a reciprocating piston must operate, should always be bored in the position in which they are to be used. The cylinder of a vertical engine should be bored standing on its end, while the cylinder of a horizontal engine should be bored in a horizontal position. In large cylinders, especially, there is considerable spring due to their weight, which will tend to produce an oval shape when a cylinder that has been bored in a vertical position is laid on its side, or when a cylinder bored in a horizontal position is set on end. When the boring is done in its working position, this difficulty is practically eliminated.

73. Tools for Finishing Cut. — The working surface should be very carefully bored in order that there may be no unevenness or irregularities of any sort. There is some difference of opinion, however, as to the best course to pursue to attain this end. Some claim that the finishing cut should be taken with a square-nosed tool in order that the surface may be perfectly smooth, while others prefer a rounded diamond point, claiming that the narrow point is less affected by unevenness in the structure of the metal, and that the slight ridges formed tend to reduce the amount of metal in actual contact, and are an advantage rather than a detriment. The ridges also tend to draw the oil under the piston, thus affording better lubricating conditions.

74. Continuous Travel on Finishing Cut. — All shop men agree that whatever tool is used for the finishing cut, it should run continuously from one end of the cylinder to the other. The heating due to the action of the tool causes enough expansion that even a short stop will leave a noticeable ridge, and long stops often make it necessary to bore the whole length over again. For this reason, cylinder-boring machines should be run by an independent engine or other motor.

75. Machines Employed in Cylinder Boring.— Cylinders are bored in lathes, vertical and horizontal boring mills, or special machines built for that purpose, depending on the amount of this class of work that is to be done. Except in shops where a specialty is made of one or more types of machines, either a lathe or an ordinary vertical or horizontal boring mill is used.

CORLISS ENGINE CYLINDER-BORING MACHINE.

76. A machine for boring large **Corliss engine cylinders** is shown in Fig. 26. Two adjustable boring bars *a* and *b*, standing at right angles to the main spindle *c*, are provided for boring the ports, while the main spindle *c* bores the cylinder proper. An outboard

FIG. 26.

bearing *d* for the main boring bar, which is mounted on a vertical slide on the column *c*, is raised and lowered to suit the spindle by means of the wheel *f*. The main spindle is driven through the cone and back gear at *g*, while the main head *h* is raised and lowered by means of a belt running on the pulleys *i*, which connect with the head by means of a vertical shaft through a worm and worm-gear at *j*. The small heads and boring bars *a* and *b* are operated through the cone and gearing at *k* and shafting and gears in the bed *l* and column *m*. The column *n*, with its bearings, forms an outer support for the two boring bars *a* and *b*. The cylinder is supported on the parallels *o* and *p*.

VERTICAL CYLINDER-BORING MACHINE.

77. In shops having a large amount of vertical cylinder boring to be done, special machines are sometimes employed;

FIG. 27.

these machines are so constructed that the cylinder stands on a heavy floor plate, to which it is clamped. The boring is done by a vertical bar, the upper end of which, together with the driving mechanism, is carried by heavy columns. These machines are sometimes so constructed that the bar and a portion of the driving mechanism may be lifted out of the way while the cylinder is being placed in the machine. Such heavy machines are usually run by an independent engine or other motor.

VERTICAL BORING BAR.

78. In shops where the amount of work does not warrant the purchase of an expensive machine, a vertical boring bar, like the one shown in Fig. 27, may be used. The cylinder is supported on the stand *a*, and is clamped between it and the four-arm bracket *b* at the top, which also forms the guide for the boring bar *c*. The bar is rotated by means of a large bevel gear *d* and a bevel pinion (not shown) that connects with a pulley from which the machine receives its power. The cutter head *e* is fed by means of the ordinary feed-screw *f* and the reduction gearing *g* and *h* shown at the top of the bar.

BORING SPHERICAL BEARINGS.

79. The boring of internal spherical surfaces is accomplished by means of a revolving boring bar that carries a tool on an arm that moves in an arc about a point in the center of the bar, the axis of rotation of the arm intersecting the center line of the bar at right angles.

80. Special Boring Bar.—Fig. 28 illustrates a device designed for this purpose. A boring bar *a* has a double-end arm *b b* pivoted on the axis *c*, which stands at right angles to the center line of the bar. The arm *b b* carries on its outer ends two tools *d*, *d*, set in and clamped as shown.

It will be seen that if the arm *b* is turned about its axis *c*

while the bar *a* is rotating, the tool points will bore an internal spherical surface. In order to secure this motion, the arm is constructed with the segment of a worm-gear *e* on one side. A worm *f* engages with this worm-gear, so that when the worm is rotated, the arm swings about the center *c*, causing the tool points to travel in an arc about the same center. The worm *f* is revolved by a star *g* through the gears *h* and *i*. A post on the floor operates the

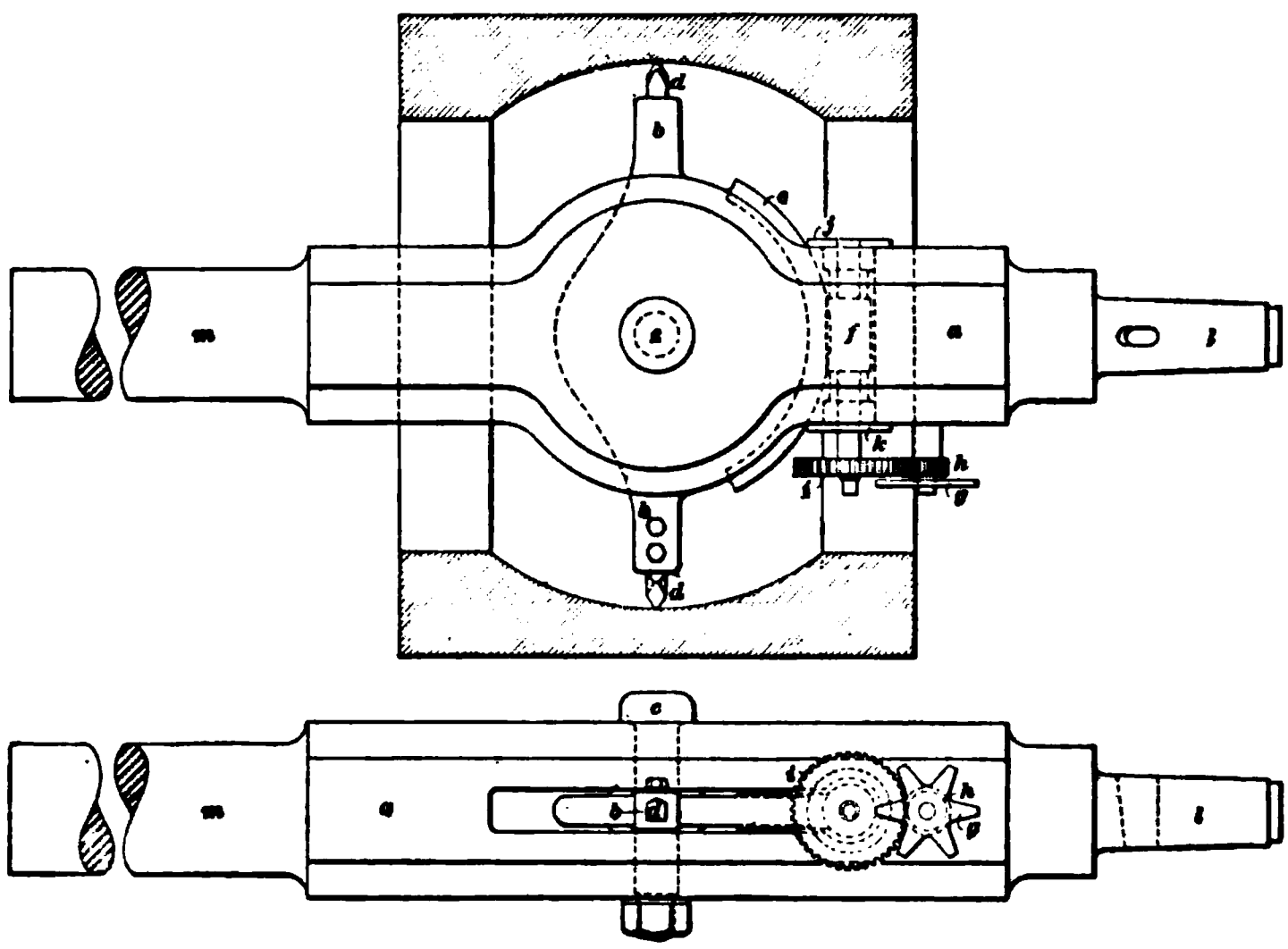

FIG. 28.

star in the usual way. The worm *f* is supported in two flanged bushings *j* and *k*, while the arm *b* is pivoted on a through bolt. The end *l* of the boring bar is made to fit the spindle of a large horizontal boring mill in which it is used, while the end *m* fits the outer bearing. Narrow round-nosed tools are usually employed with a fine feed, so as to form a smooth surface. For the roughing cuts, the two tools may be used, but for the finishing cut, it is best to use one tool only.

81. Portable Boring Devices.—When the amount of spherical boring to be done does not warrant the

construction of a bar as illustrated in Fig. 28, or in cases where a portable arrangement is necessary, a boring bar may be fitted up as shown in Fig. 29. An ordinary boring bar *a*, with its feed-screw and gearing *b* and *c*, and boring head *d*, is fitted up with a forked arm *e*, which is pivoted on both sides of the bar, so that the axis of rotation of the arm and the center line of the bar intersect at right angles.

FIG. 29.

The arm *e* carries a tool *f* and is connected with the head *d* by the link *g*. The boring bar is rotated by means of the worm-gear *h* and a worm and pulley that are not shown. As the screw *b* is rotated, the head *d* is moved along the bar, and the link *g* causes the arm *e* to swing about its axis, and, when both bar and screw are rotated, the tool will form the desired spherical surface.

The illustration shows the bar mounted on a large engine bed *i i*, ready to bore the spherical bearing *j j*. The bar is supported on two brackets *k*, *k* bolted to the ends of the bearings, and is kept from moving endwise by means of the worm-gear *h* on one end and the collar *l* on the other end.

DRILLING AND BORING.

(PART 3.)

DRILLING-MACHINE OPERATIONS.

DRILLING, BORING, AND TAPPING.

DRILLING.

1. Laying Out.—In many modern machine shops, the **laying out** of all the work is done in a special department and the work is sent to the machine tools ready for the operation. For the drilling machine, the center of the required hole is marked; a circle equal to the diameter is scribed about it and light prick-punch marks put at the center and at intervals about the circumference, as shown in Fig. 1. The diameter and character of the hole are also marked, usually with chalk. The marks on Fig. 1 indicate that a 1½-inch reamed hole is required.

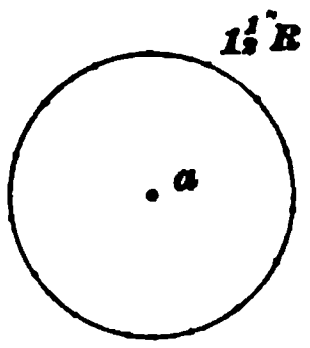

FIG. 1.

2. Enlarging the Center Mark.—When the work reaches the drill, the operator enlarges the center *a* with a large center punch, to form a guide for the drill point when beginning the cut. It is practically impossible to start the drill in the center of the hole without the assistance of this deep center mark.

For notice of copyright, see page immediately following the title page.

3. Adjusting the Work and Table.—The piece is now ready for the drill, and is mounted and clamped on the table as already explained. The drill table is then swung about and adjusted until the center mark stands immediately under the drill point, the drill having, in the meantime, been run down to make sure that the point coincides with the center. The table is then clamped to prevent any motion while drilling, the machine started, and the drill fed into the work.

4. Starting the Drill.—When the drill has commenced cutting, any unevenness, or varying hardness of the metal, or imperfection in the drill point, tends to carry the point away from the true center of the hole. As the drill runs down, making a conical hole as shown in Fig. 2, any tendency away from the center may be observed by raising the drill point slightly and blowing or brushing away the chips. If the outer circle made by the drill is not concentric with the circle of punch marks, the drill has run off from the desired center, and must be brought back. A drawing chisel, shown in Fig. 3, is used for this purpose. This is simply a narrow round-nosed chisel with which the metal is cut away on the side toward which the drill point is to be drawn, as shown in Fig. 4. The cutting should be done quite near the center, as a given amount of metal removed there will draw the drill farther than when the cutting is done near the circumference.

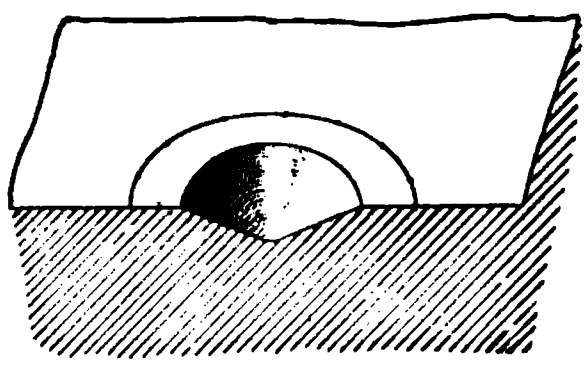

FIG. 2.

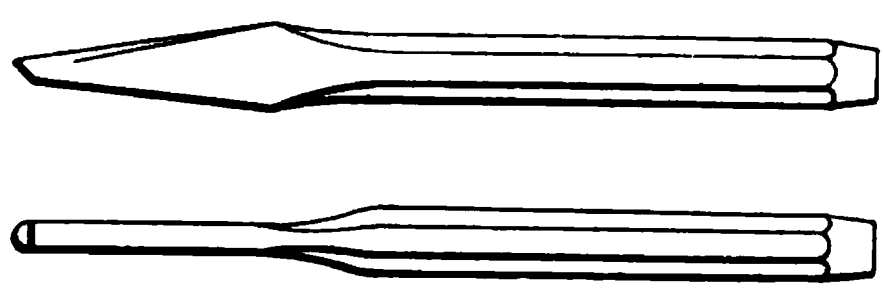

FIG. 3.

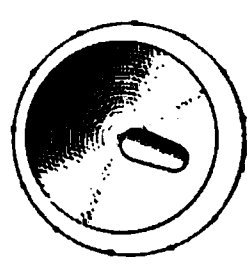

FIG. 4.

The drill is again lowered and the result observed. If the circle should not be concentric, the chisel is again used and the drill tried; this operation is repeated until the hole coincides exactly.

with the circle when the drill has entered to its full diameter. The punch marks are cut away equally all around the circumference when the drill has been properly started. The drill is then fed through the piece, or to the desired depth, either by hand or by power, and when the cut is finished, it is backed out by hand.

5. Advantages of Power Feed.—All drill presses of the heavier types should be so constructed that either hand or power feed may be used at will. In light work, enough pressure can be furnished by hand to cause the drill to cut to its full capacity, but in the heavier work a greater pressure is needed. It is contended by some that the average workman will accomplish more by feeding by hand than by using a power feed, since the tendency seems to be to set the feed at its finest rate, although most drill presses are provided with gearing that will furnish two or more rates. This is the fault of the operator and not of the method. The power feed should be so set that the drill will work up to its limit, which it is impossible to accomplish with a hand feed when large drills are used.

The power feed has several advantages over the hand feed for all sizes of drills. With a hand feed, the drill will leap forwards as the point emerges from the material, often causing a rough hole and injury to the drill. The same is true when it enters a blow hole. In drilling flanges, the drill frequently breaks through on one side, and, when the cutting edges stand at a certain angle, the drill runs forwards easily and the next instant takes a heavy cut on one side only. It is evident that this condition will sooner or later result in an injured drill. With the power feed, all this is avoided, as the drill has a fixed rate of advance. In using the power feed, care must be taken to see that the drill is in proper working condition.

6. Lead Holes.—In using large drills, time may be saved by drilling a small hole at the center for the entire depth of the hole, the diameter of this small hole being made at least equal to the length of the scraping edge at the point

of the large drill. The small center hole is called a **lead hole.** This hole will permit all the pressure to come on the cutting edges proper, and all the power is applied directly to removing the metal. The drill will thus cut more rapidly than it will when required to remove the metal from before its center.

When the large drill runs out of center at the start, it is necessary to draw it over with a drawing chisel. In this case, a groove running the full length of the conical surface should be cut as shown in Fig. 5.

FIG. 5.

7. Drilling Deep Holes. — In drilling deep holes through a piece of work, it may be necessary to go deeper than the length of the flutes in the drill of the required size. If the hole is not too deep, the drill may be backed out and the hole cleaned at short intervals. When the hole is very deep, however, time may be saved by running the drill down as far as the chips will discharge, then drilling the remaining depth with a smaller drill, making a hole as shown in Fig. 6. The first drill is then put back into the machine and the entire hole drilled to the full size.

FIG. 6.

The second drill must be small enough so that the chips can work out around it, but must not be so small that the chips made by the larger drill that follows it cannot drop out freely at the bottom. In one instance, where a $1\frac{15}{16}$-inch hole was drilled through 26 inches of solid cast iron, a $1\frac{1}{4}$-inch drill was employed to drill the small hole and gave good results.

REAMING.

8. Methods of Reaming.—It has already been stated that **reaming** consists of truing up a hole by means of a reamer. The hole has been previously drilled or bored, and,

as it is a matter of economy to do as much work as possible at the same setting, the reaming is often done in the same machine that was used for the drilling or boring. The roughing reamer is usually made with a shank that can be used in a drill press, and is run at a slow speed and fed carefully by hand. For very accurate work, the reamer should be operated by hand, but may be guided by a center in the drill spindle, as shown in Fig. 7. The reamer *a* is turned with a wrench and is followed up by the center *b*, which also furnishes the necessary pressure.

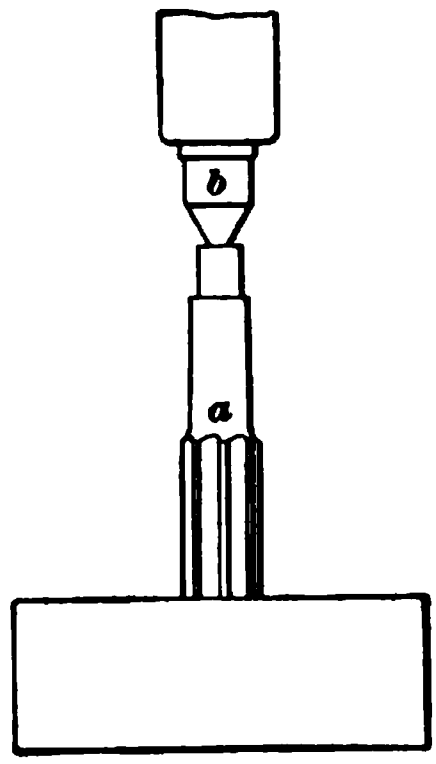

FIG. 7.

9. Care Necessary in Reaming.—Reaming should be done with the greatest care. Undue forcing of the reamer, any side pressure, or any irregular or jerking motion, tends to injure both the reamer and the hole. A very steady and comparatively slow motion under a light pressure gives the best results. In some cases, the weight of the reamer and the wrench is sufficient to furnish the feed, although some additional pressure is usually necessary.

10. Machine Reaming.—In cases where a large number of holes are to be reamed, it is done with one reamer, operated by a drill press and fed with the power feed. This should, however, be done only in cases where there is enough work of this kind to enable the operator to know exactly what speed and feed to use, and to set his machine properly. The holes, too, must be drilled very carefully, in order that there may be no great variation in the duty of the reamer.

TAPPING.

11. Forms of Taps Used.—The forms of **taps** used in the drilling machine are the same as those used in the lathe, except that in the former the shank is usually made

with a standard taper or other form adapted for drill chucks or sockets, while in the lathe the square-end tap is used. The devices for holding taps in the drilling machines are explained in Arts. **87** and **88**, *Drilling and Boring*, Part 1.

In ordinary machine tapping, a taper tap gives the best results. When the thread runs through the material, the tap is run either entirely through or until a thread of the full diameter is formed. When the hole does not run through and the thread must run as near the bottom as possible, the taper tap is used to start the thread, and is followed by a plug and bottoming tap.

12. Speed of Spindle.—As in reaming, the speed of the spindle must be slow, and, after the tap is started, no pressure should be put upon it by the feeding device. The tap should be perfectly free to take its own feed.

13. Correct Size of Drilled Hole.—It is a very important matter in tapping that the hole should be so drilled that a full thread will be formed without removing an excessive amount of metal. When the hole is drilled too small, it is very hard to start the tap, and, when it is started, the work is so heavy that the tap is frequently injured, while the amount of time and energy required is far greater than is necessary.

It is claimed by some, however, that the hole should be drilled larger for cast iron than for wrought iron and steel, and that a thread about three-quarters full in the case of cast iron is stronger than a full thread, owing to the danger of crushing the points of the thread and perhaps injuring the tap in case a full thread is attempted.

A hole that is too large is equally objectionable, as the threads will not be of the full depth, and will, therefore, be imperfect and weak. The tap runs very easily, however, when the hole is large, and for this reason there is a tendency toward making it large, even at some sacrifice in the strength of the thread. This should, however, never

be permitted, as the perfect form of the thread should be maintained under all conditions. Tables V and VI, Art. **47**, give the sizes of drills to be used for taps of various sizes.

COUNTERSINKING, COUNTERBORING, FACING, AND CENTER DRILLING.

14. Countersinking, counterboring, and **facing** are carried on very much as ordinary drilling. The tool is inserted in the drill socket, the hole brought central with the spindle, and the tool is fed down to the desired depth. The speed should, however, be reduced to a suitable point for the outside diameter of the cutting edges of the tool used. **Center drilling** is fully considered in Art. **23**, *Lathe Work*, Part 1, and Art. **29**, *Drilling and Boring*, Part 2.

LUBRICATING.

15. The subject of **lubrication** of drills has already been considered in Arts. **40** to **42**, *Drilling and Boring*, Part 1. The same conditions with regard to lubrication that have been mentioned exist in the use of countersinks, counterbores, facing tools, and center drills. In working cast iron and brass with these tools, no lubrication is necessary; in fact, it retards the work in the case of cast iron. Wrought iron and steel, however, always require lubrication. In reaming and tapping, some form of lubricant should be used with all metals.

Usually, the lubricant is dropped on the cutting edges with an ordinary oil can, but in multiple-spindle machines, and occasionally in single-spindle machines, a tank, with a tube leading to the tool, is attached to the machine frame. The flow is controlled by means of a valve in the tube. A small pump carries the lubricant from the table of the machine back to the tank, thus providing a means of using the same lubricant over and over again, and of flooding the cutting edges without undue waste of the lubricating material.

DRILL GRINDING.

16. Form of Drill Point.—The form of **drill point** that will give the best results has already been considered in *Drilling and Boring*, Part 1. It is very important that this form shall be maintained whenever the drill is ground. The drill point should always be perfectly symmetrical, and when cutting, should produce similar cuttings on each side.

17. Hand Grinding.—To grind a drill by hand so that the above conditions may be fulfilled requires the greatest skill and care. **Hand grinding** is usually done by holding the tool on the grinder without any gauge, and depending only on the eye for the correct cutting and clearance angles. Sometimes a flat drill is tested by pressing the one cutting edge against a smooth piece of wood, while holding the drill in a certain position, then turning it and pressing the other edge on the same mark, still maintaining the same position of the shank. If the two marks coincide, the drill is supposed to be well ground. The accuracy of this test depends entirely on the skill of the workman, but remarkably good results are often obtained in this way.

18. Measuring the Cutting and Clearance Angles of Twist Drills.—The test given above is not a very sure one, and it is better in the case of a twist drill to use a gauge, or a protractor, set at the required angle, as shown in Fig. 8 (*a*). By turning the drill so as to bring the protractor from *a* to *b*, the clearance angle may be observed, and in this way the two sides may be compared.

Another method often used is illustrated in Fig. 8 (*b*). The point of the drill is set on a plane surface or on a straightedge, and a scale held against its side, as shown. The heights of the corners *a* from the point are thus measured. If the two sides are alike, the drill is turned, and the heights of the corners *b* are measured, thereby determining whether the clearance angles are equal. The scale is then

laid along the cutting edges, and if all three corresponding measurements agree on both sides, the point is symmetrical.

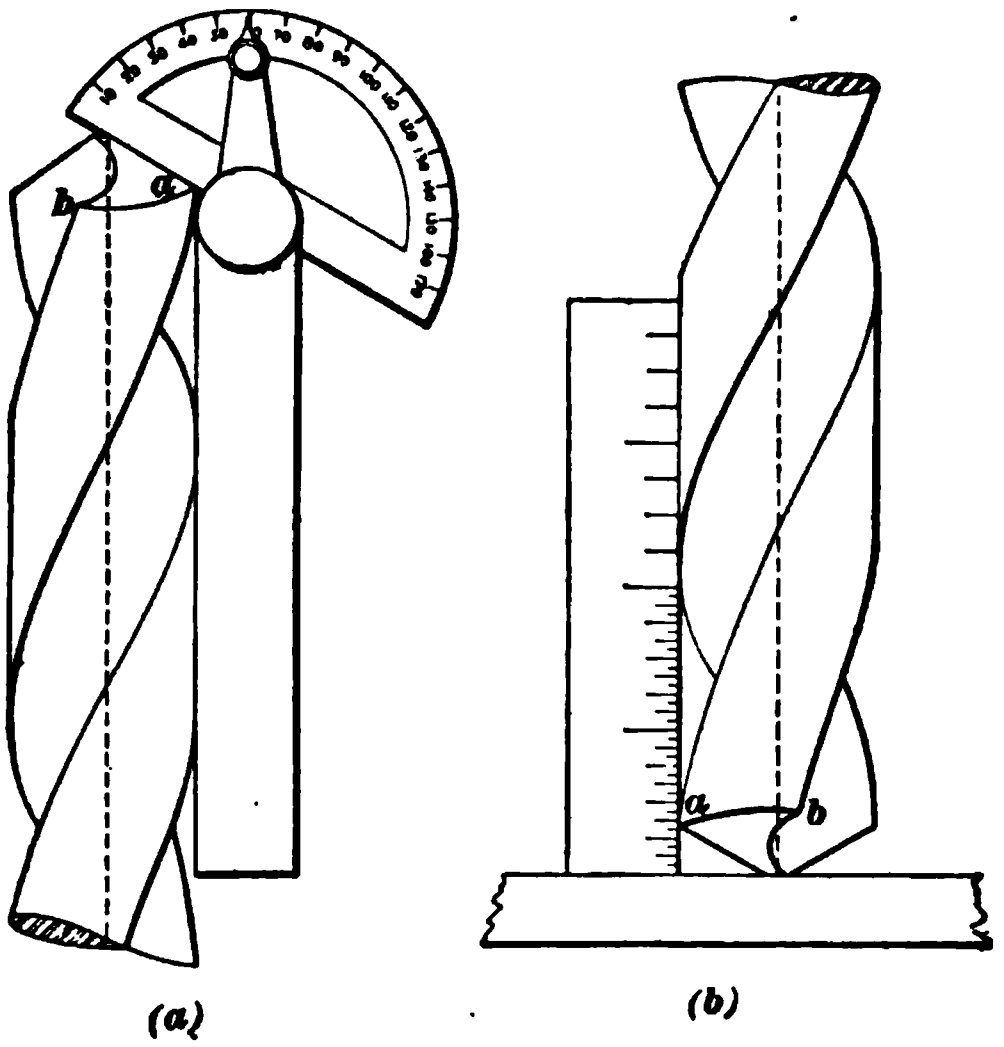

FIG. 8.

19. Angle and Length of Scraping Edge.—The clearance angle determines the angle of the line *a b*, Fig. 9 (*a*), in which the planes of the clearance faces intersect. This illustration shows about the correct angle. When the angle is too small, as in Fig. 9 (*b*), or too great, as in Fig. 9 (*c*), the drill will not work well.

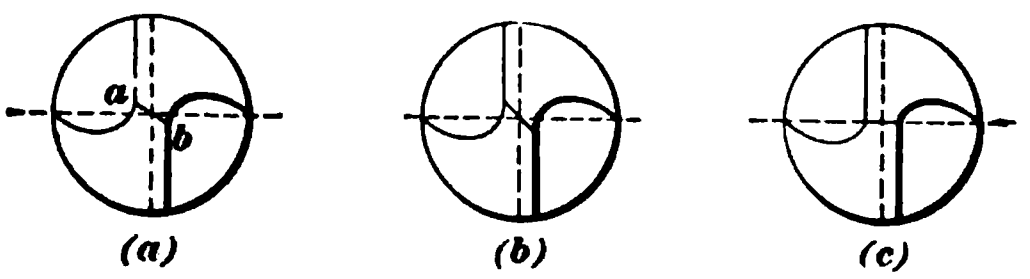

FIG. 9.

In order to give strength to the drill, the center is made thicker as it approaches the shank, and it is obvious that as the cutting edges are ground back, the length of the line *a b*, Fig. 9 (*a*), increases. When this increase becomes objectionable, the flutes should be ground out until the point is

reduced to its original thickness. In this operation, care must be taken not to change the shape of the flute.

20. Machine Grinding.—As may be expected from the methods employed, hand grinding is generally not satisfactory, and machines that obviate the difficulties met with in hand grinding have been brought into very general use. The machine shown in Fig. 10 may be taken as a fair representative of twist-drill grinding machines.

21. Twist-Drill Grinding Machine.—The grinding wheel *a*, which is rotated by means of a belt, is supported on a column *b* at a convenient height from the floor. The drill is held on two V-shaped supports *c*, *c* and an end rest *d*, all of which are held on an arm *e*, which is supported in a bearing *f*, about whose axis the arm *e* is free to swing. The bearing *f* is supported on the end of the arm *g* and may be moved nearer or farther away from the wheel *a* by sliding the arm endwise in its bearing, while it may be clamped at any position.

FIG. 10.

22. Grinding Twist Drills.—To grind the drill, it is laid on the V's *c*, *c* and the end rest *d* is adjusted to hold the drill near the wheel. The lip of the drill is laid against a gauge that is hidden behind the upper V, and the arm *e* is rotated about the axis *f*. The drill is fed slowly toward the wheel by turning the screw *h* until the drill is ground to the desired edge.

23. Form of Clearance Face. — It is evident from this construction that the metal back of the cutting edge will be ground away in the form of an arc of a circle, and not in a plane surface as in hand grinding. This has been thought objectionable, but the use of these machines has demonstrated that if the radius is properly adjusted for each size of drill, the arc immediately back of the cutting edge will be so flat, and will approximate so closely to a plane, that the supporting edge is practically not weakened. As the arc runs farther away from the cutting edge, it, of course, deviates more from the true clearance angle, but before any deviation is noticeable, the arc has run so far back that the support of the cutting edges is not affected.

24. Length of Radius.—The length of the radius is adjusted by moving the arm *g* in or out of the bearing, the position being determined by a very ingenious little device shown at *i*. In order to make the adjustment for the drill, the arm *g* is loosened and drawn out a short distance. The upper V, *c*, is then loosened and moved up until the opening between the projection *i* and the projection *j* on the arm *e* just permits the drill to pass through. The V is clamped in that position, and the arm *g* is again moved in until the lip gauge, already mentioned, just clears the wheel. The end rest *d* is then set to the proper position, and the drill laid on the V's and ground, as explained above.

These adjustments can be made with very little loss of time, and a perfectly symmetrical drill point is assured. It is claimed that a machine of this type will grind drills ranging from $\frac{1}{8}$ inch to $2\frac{1}{2}$ inches in diameter.

DRILLING AND BORING JIGS AND FIXTURES.

DRILLING JIGS.

25. Drilling Duplicate Pieces. — Duplicate pieces may be drilled by the use of **drilling jigs.** A drilling jig is a device or fixture that may be temporarily attached to the work, and acts as a guide for the drill in any desired

position. The guiding of the drill is accomplished by means of steel bushings placed over the positions of the required holes. It is obvious that in this way a large amount of time otherwise devoted to laying out may be saved, and, when the jig is well made, a degree of accuracy may be attained that is impossible by any other means. The economy of such a device depends on the number of pieces to be drilled and the cost of the jig.

26. Construction of Jig. — The body of the jig is usually made of cast iron, but, in order to prevent undue wear of the holes, hardened-steel bushings *d*, Fig. 13, which fit both the jig and the drill snugly, are inserted. These bushings are generally made with a shoulder, as shown in Fig. 11, and with the inner corner slightly rounded, to avoid injury to the drill when entering. Jigs are frequently used from both sides, the bushings being set as shown in Fig. 12, and the inside corners being rounded on both ends.

Fig. 11.

In drilling two adjacent parts, as, for instance, the flange and head of a cylinder, the head may be drilled first, and may then be used as a jig for drilling the cylinder, or as a templet for marking the holes. When a large number of duplicates are to be made, however, it is better to use a jig for both the cylinder and head.

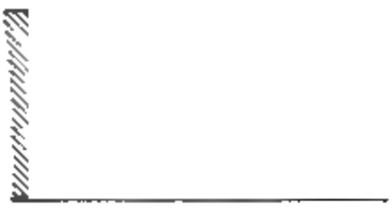

Fig. 12.

27. Jig for Drilling Flanges With Regularly Spaced Holes. — Fig. 13 illustrates a flange *a* and a jig *b* of the form that is very generally used for this class of work. A lip *c* on the circumference fits the

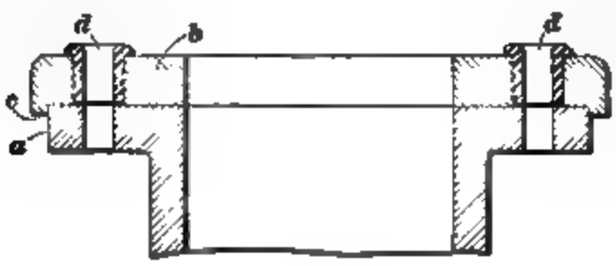

Fig. 13.

flange and holds the jig central. When in the desired position, a clamp is applied to keep the jig in place while the drilling is being done. When the holes are equally spaced on the same circle, and the adjoining flange or head is of the same diameter, it may be drilled with the same jig, thus insuring a continuous hole when the two parts are put together.

28. Jig for Drilling Flanges With Irregularly Spaced Holes.—When the holes are not regularly spaced, it is evident that they cannot be drilled by turning the jig over, as suggested in Art. **27**; consequently, it is necessary to make the jig with a lip on each side and with bushings set in, as shown in Fig. 14, so that each side of the jig will fit one of the adjacent flanges. It is evident that when the flange *a* is

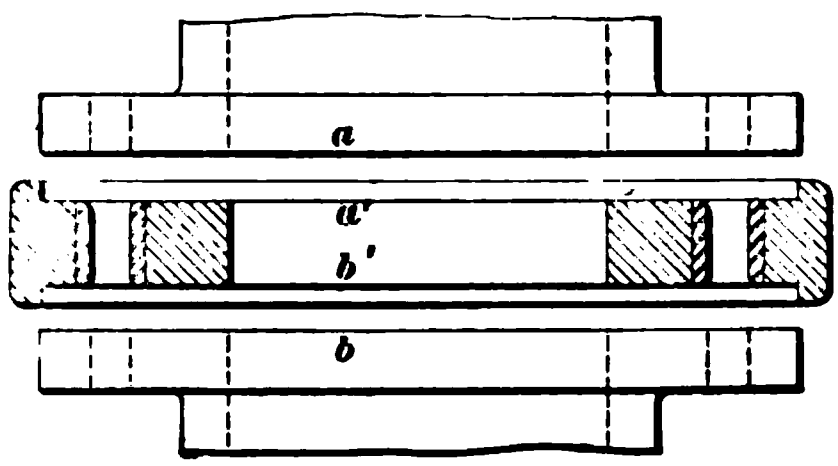

FIG. 14.

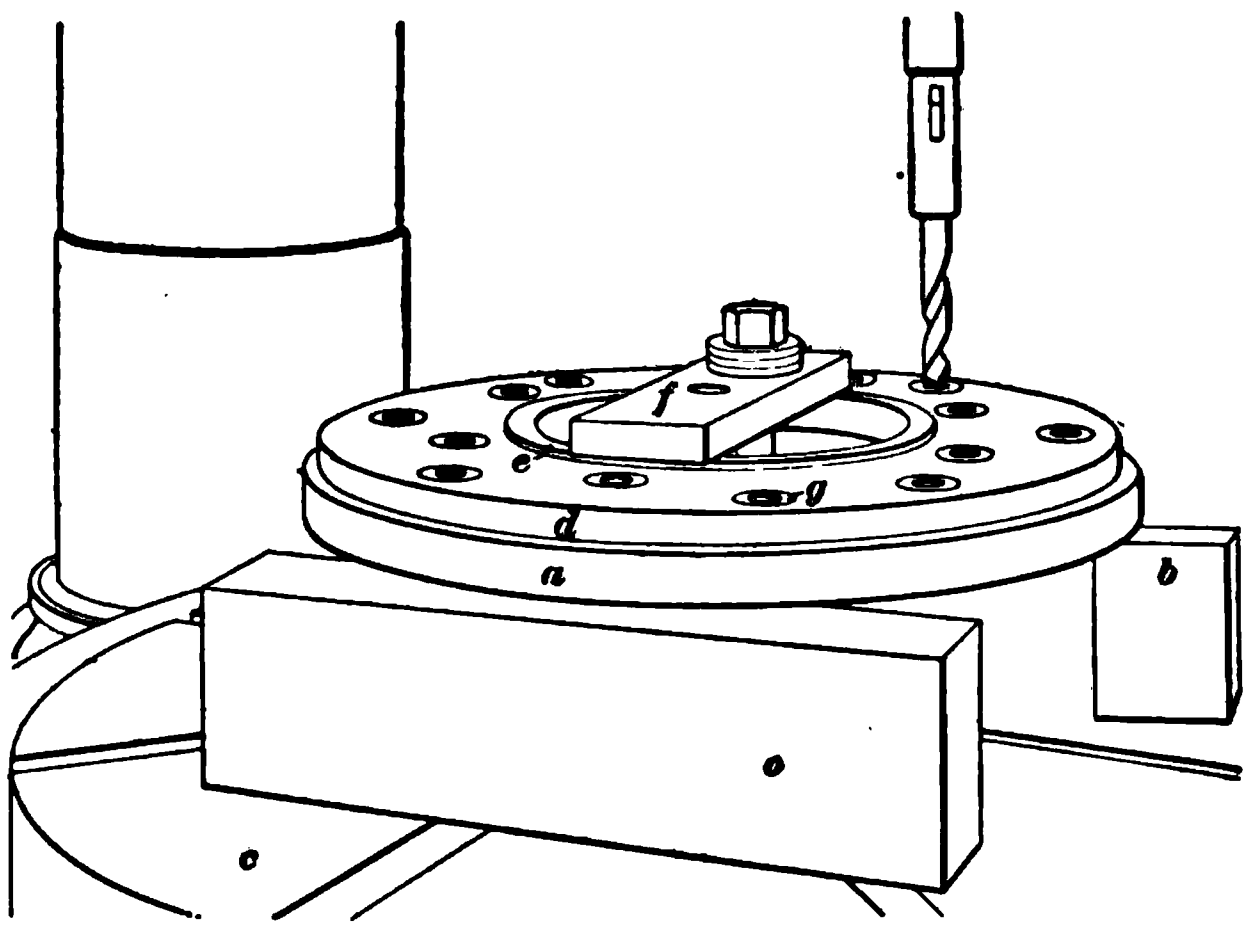

FIG. 15.

drilled with the side *a'* of the jig against it, and the flange *b*

with the side *b'* against it, the holes in the two flanges will meet perfectly, however irregularly they may be located.

29. Example of Drilling With Jig.—Fig. 15 shows, mounted on a drilling-machine table, a jig for drilling the hub and hub plate of a locomotive wheel, in which the holes are not regularly spaced. The plate *a* is supported on parallels *b* resting on the table *c*. The jig *d* has a lip *e* on each side, to fit the bores of both the plate and the wheel. The set-in bushings are shown at *g*. A single clamp *f* holds both jig and plate in place.

30. Outside and Inside Jig.—Fig. 16 (*a*) shows a jig used in drilling two parts, one of which has a projection *a* which must fit into a bored hole *b* on the other. The jig is

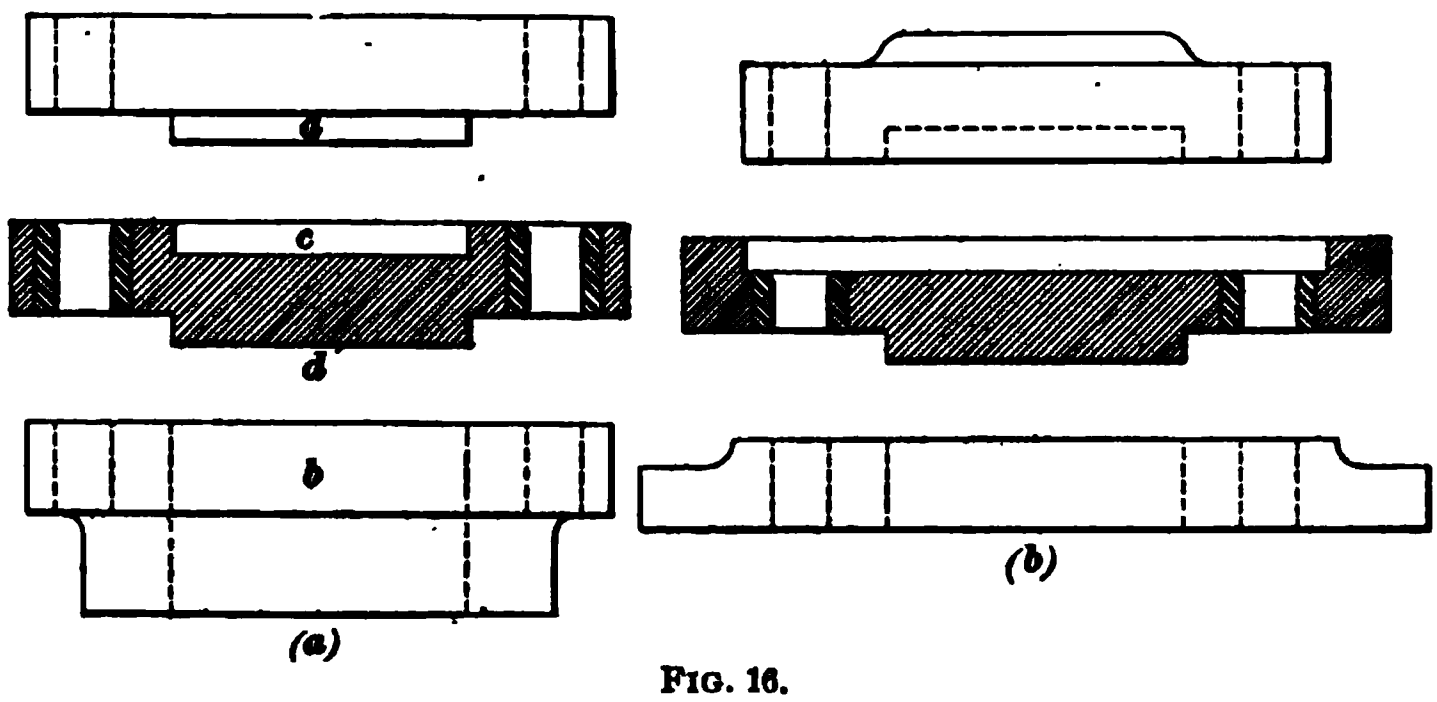

FIG. 16.

made with a counterbore *c* on one side, which will fit the projection *a*, and a projection *d* on the other side to fit the bore *b*. This same arrangement may be used in drilling parts of different sizes, as, for instance, a manhole and its cover, as shown in Fig. 16 (*b*).

31. Jigs for Irregular Surfaces.—The jigs shown thus far are intended for circular pieces, but the principle involved may be applied to pieces of any form, with either regular or irregular surfaces. Fig. 17 shows a right-hand and left-hand jig used in drilling parts of the saddles of a vertical boring mill. One of the pieces is shown at *a*, and a number of them are piled up at *b*. Two of these pieces—

one a right-hand *c* and one a left-hand *d*—are bolted on the floor plate of a radial drill, with the jigs in place ready for drilling. All the holes in the two pieces are drilled without moving either piece. The upper surface of the

FIG. 17.

saddle being uneven, several holes are required on the level *e*, and others on the level *f*. The illustration shows how the jig is formed to fit the uneven surfaces.

For holes that are to be reamed, two bushings are provided, one for the drill and the other for the reamer. The drilling bushing is made smaller than that for the reamer, the difference in their diameters being equal to the allowance for reaming.

BORING FIXTURES.

32. Fixture for Boring Duplex-Pump Cylinders. Fig. 18 shows a fixture that produces practically the same result as a jig. Although it does not form a positive guide for the boring tool, it so holds the work as to properly locate the holes. It is a device for holding a pair of pump cylinders while they are being bored in a double-head machine, which is also double-ended, boring the four cylinders at the same time. The cutters at the two ends of the machine

rotate in opposite directions, thus lessening the tendency to move. In Fig. 18 *a* shows the device empty, while *b* shows a pair of cylinders mounted in the machine. The cylinders rest on a pair of cross-bars *c*, *c* supported on four adjusting screws. The end adjustment is made by means of a screw *d* at each end, only one of which is seen, while the side adjustment is made by means of the four screws *e*, *e*, *e*, *e*. The fixture is set on the table, as shown, the two tongues *f*, *f*

FIG. 18.

fitting into corresponding slots, to prevent any slipping and to insure perfect alinement on the table. The fixture is clamped on the table by means of the bolts *g*, *g*. When the cylinders are in place, and the adjusting screws are set up tightly, the cylinders are held securely by means of the clamps *h*, *h*. The illustration shows a roughing cutter *i* just entering the cylinder and a pair of finishing cutters *j*, *j* lying on the top of the machine.

33. Special Boring Fixture.—Fig. 19 illustrates a special fixture for boring the connecting-rod-pin hole of a gas-engine piston. The piston *a* is held between the two V-shaped castings *b* and *c*. The one casting *c* is bolted firmly

against the side of the rest, as shown, while the other casting *b* is loose. The piston is placed between the V's, as shown, and when set in its correct position, *b* is drawn up against it by the two end bolts *d*, and the clamping bolts *e* are tightened. The boring bar *f* is then passed through the

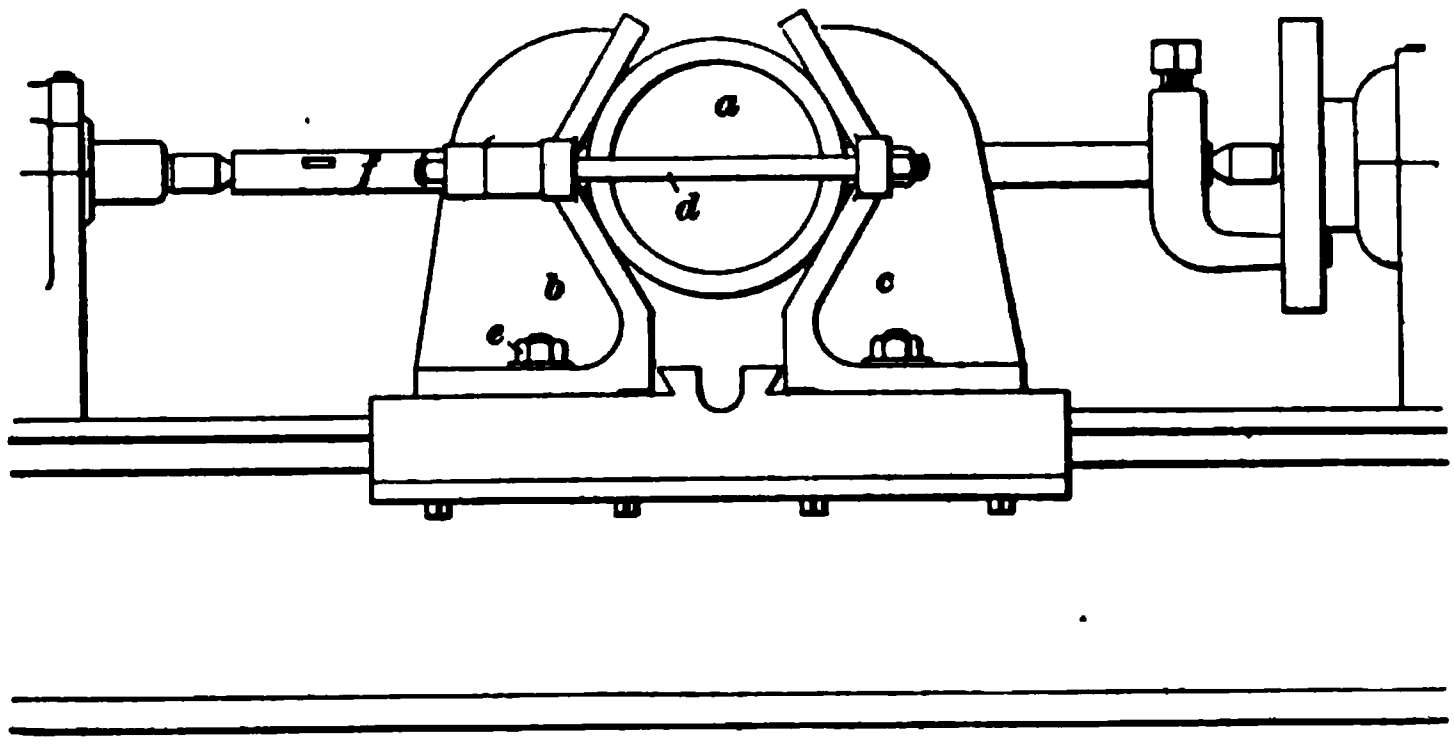

FIG. 19.

V's and the piston, and the holes are bored in the usual way. This arrangement insures a hole that is perfectly central and square with the piston. For larger pistons, a single V is used in a larger lathe, the piston being simply clamped against it. A fixture like this can be employed on either a lathe or a boring mill.

DRILLING AND BORING LOCOMOTIVE CONNECTING-RODS.

34. In drilling and boring the ends of locomotive connecting-rods and similar work, a machine with two heads supported on a common cross-rail, so that the spindles may be set at any position along the cross-rail, is frequently employed.

Fig. 20 shows the table of such a machine with a connecting-rod *a* fastened upon it. In the illustration, the one spindle is fitted with a drill *b* to form a guide hole for the pin *f* of the annular cutter, while the other spindle is equipped with an annular cutter *c*, as described in Art. **36**, *Drilling and Boring*, Part 1, with two tools *e*, *e* to remove the body of

the metal from the hole, the hole having previously been formed for the center pin *f*. The hole formed by the annular cutter is finished with the reamer *d*, which is of the inserted-tooth type. The holes in the reamer are made simply to reduce the weight. The piece is held on the table by means of two clamps *g* and *h*, the end *i* being laid flat on the surface and the end *j* resting on a parallel *k*, which is equal in thickness to the vertical distance between the two lower faces.

FIG. 30.

35. Circular parallels *l* of different thicknesses are often used in blocking up the ends of the rod, each size of rod having its own set of parallels. The inside diameter of the parallel is somewhat greater than the diameter of the corresponding hole in the rod, in order that the support may not be affected when the block of metal is removed.

FIXTURES FOR SUPPORTING AND ROTATING WORK.

36. V Supports.—Fig. 21 shows a very useful device for drilling cylinders. Two pedestals *a* of a suitable height are placed on the base of the drilling machine at a sufficient distance apart to accommodate the work to be drilled. Two V-shaped bearings *b* are placed on the pedestals, and are so lined up that the center of a shaft lying on them will lie in

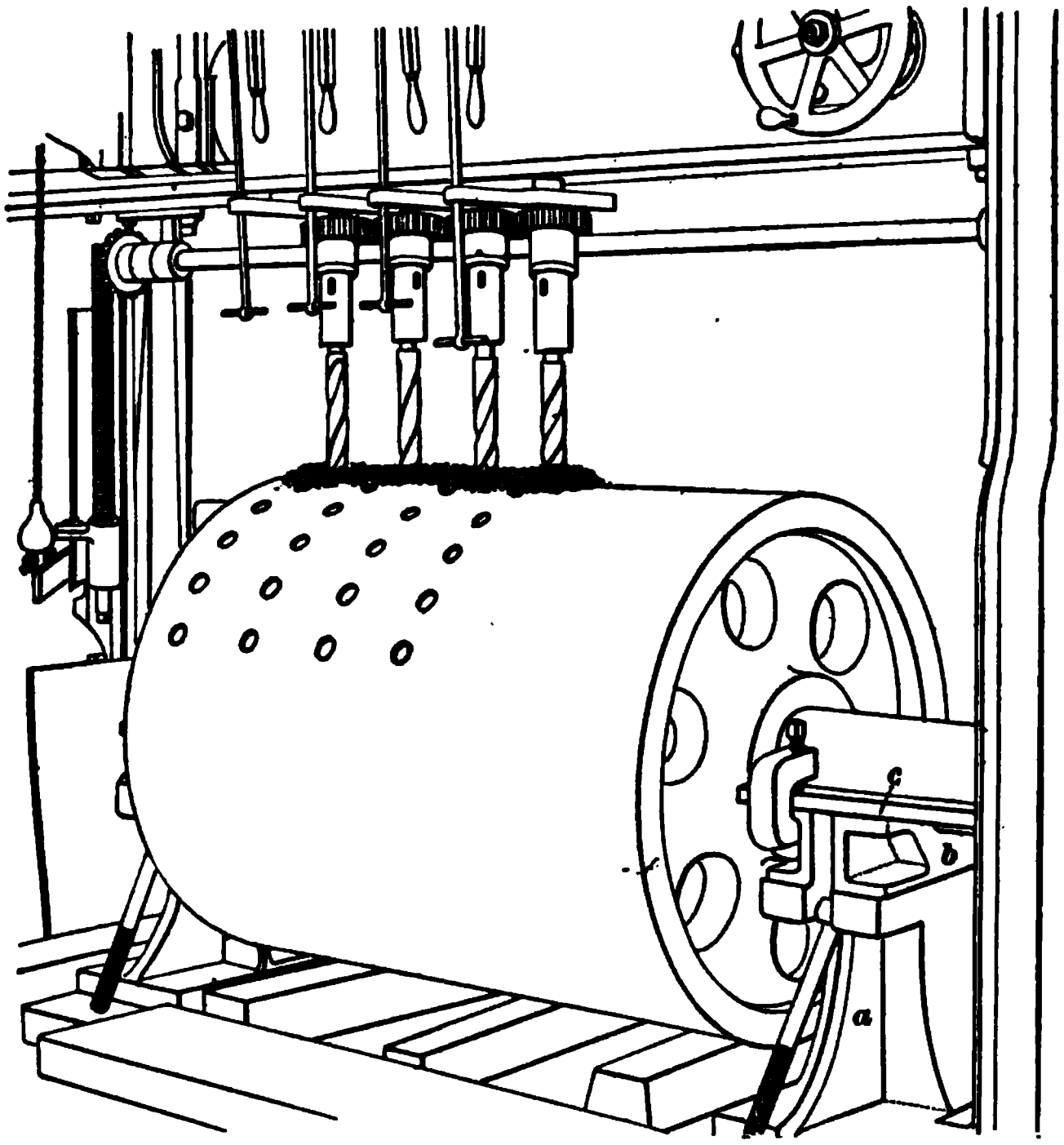

FIG. 21.

the center lines of the drill spindles. The drills will, therefore, always drill radial holes in a cylinder whose shaft rests on these V's and it is necessary simply to lay out the holes, drop the cylinder with its shaft in place, adjust the drill spindles to the right distance apart, and drill in circles about the cylinder, as indicated by the rows of holes shown,

the cylinder being turned on the V's until each successive set of holes comes under the drills. The cylinder is kept from working endwise by the bar *c*, which is set against the hub and clamped to the pedestal. The cylinder shown in this illustration is a crushing roll for anthracite coal. When the holes are drilled, they must be reamed before the teeth are inserted.

37. Roller Supports.—Fig. 22 illustrates a roll set up ready for reaming in a radial drill. It is supported on four rollers *a*, held in two frames *d*, *d*, one at each end of the roll. The first row of holes is adjusted vertically above the axis

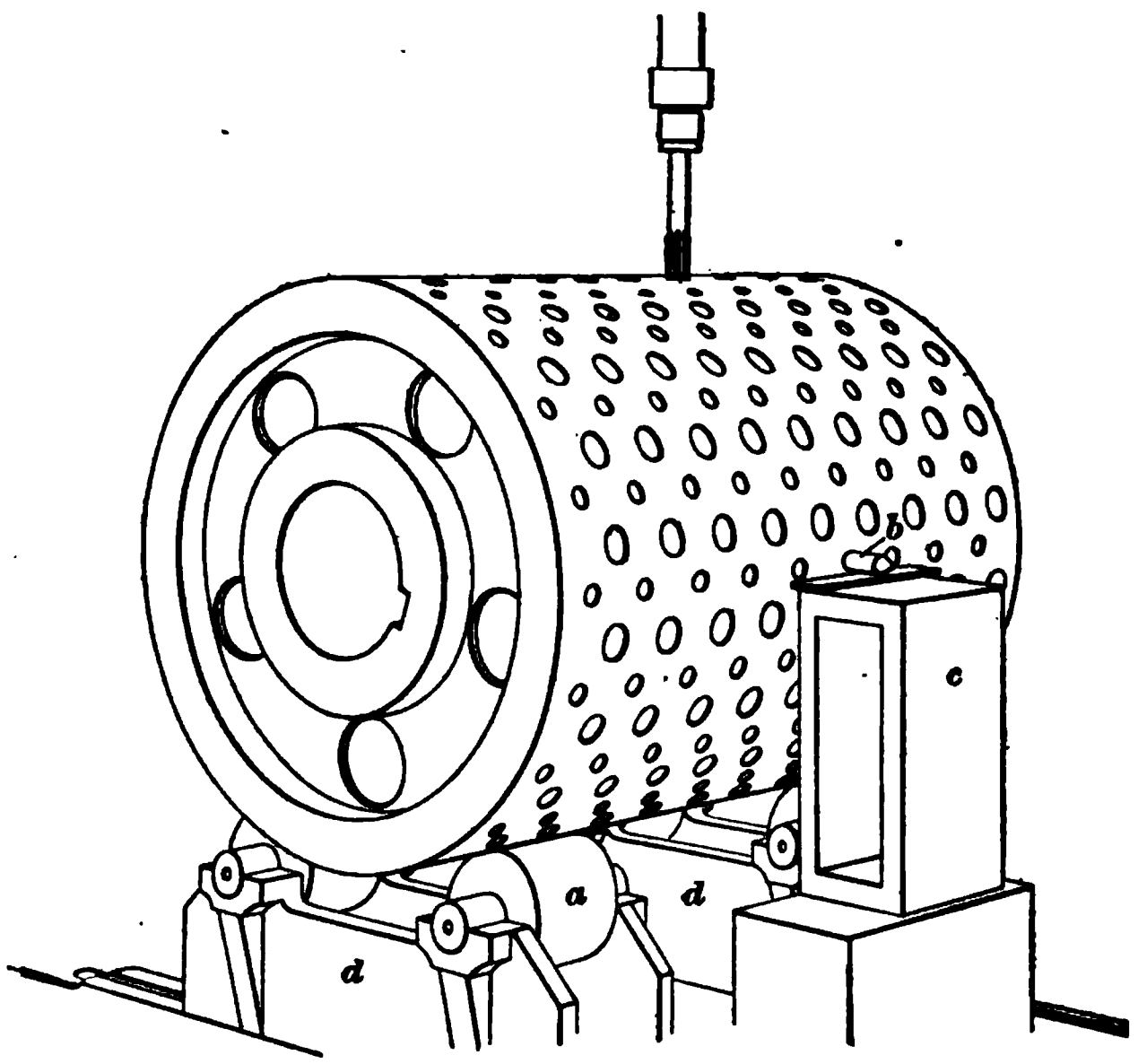

FIG. 22.

of the roll by means of a surface gauge, with which a set of holes on opposite sides of the center are brought an equal distance from the floor. When this adjustment has been made, a pin *b* is inserted in a hole about the height of the center line, and a block *c* is so fitted that the pin rests on it.

This acts as a stop to prevent the roll from turning. When one row of holes is reamed, the pin is moved down one row and then brought up by turning the roll until it again rests on the block, thus furnishing a very simple means for adjusting each successive row.

38. Heavy Centers.—Fig. 23 shows a very good device for holding heavy parts with circular ends, such as pump chambers, under a radial drill. Two uprights *a*, *a*, with two cones *b*, *b*, provided with roller bearings, support the work, the cones entering the ends of the work, as shown. A rod *c* passing through the center of the cones and the casting keeps the uprights from spreading. The piece is set in the correct position for drilling one set of flanges, the tie-rod *c* is tightened, and all the holes in this plane are then

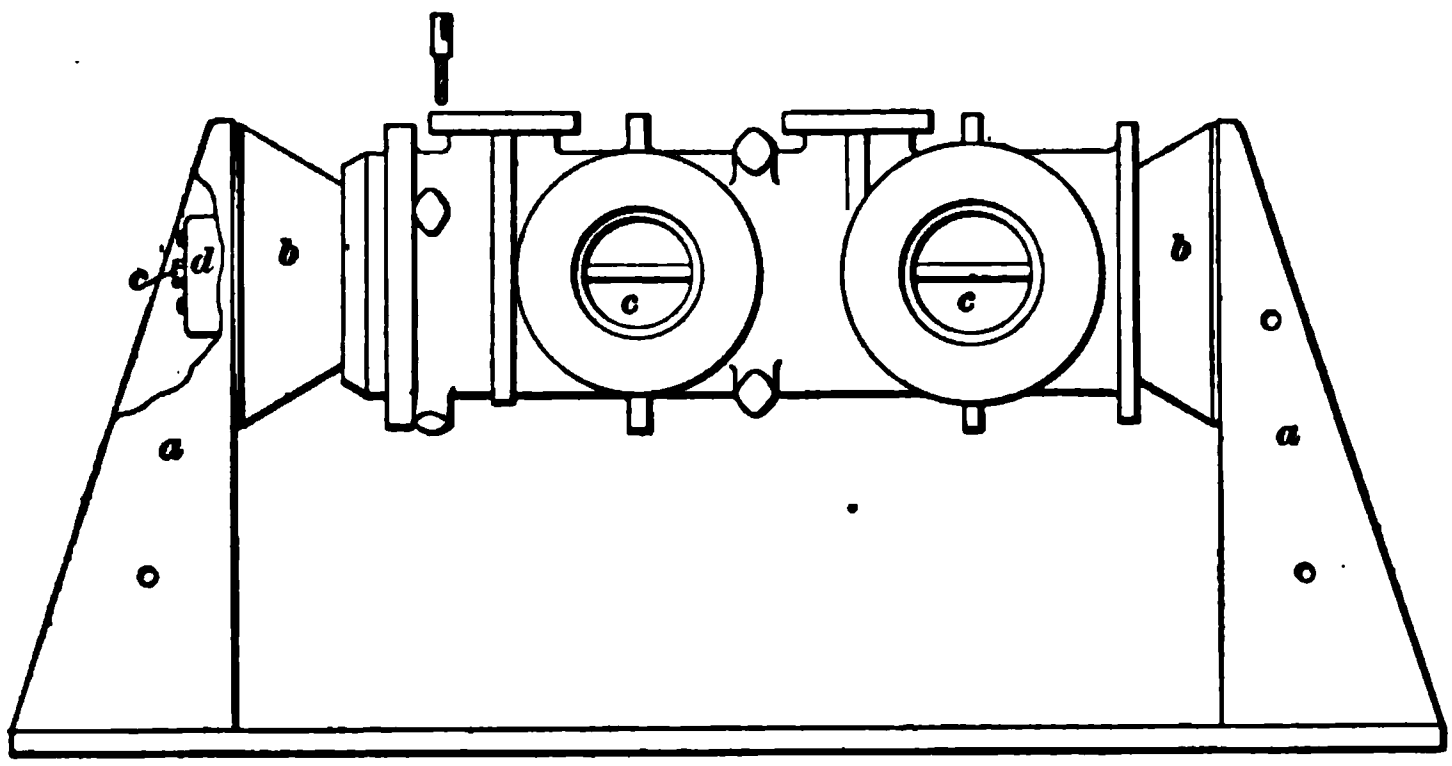

FIG. 23.

drilled. The rod is then loosened slightly, and the piece turned until another set of holes comes into position, when *c* is again tightened, and the drilling on this face is performed. This operation is repeated until all the holes are drilled. The rollers in the hub *d* reduce the friction of the bearings so that heavy pieces may be turned with comparative ease. When any regular series of spaces is required, a special index may be attached at one end, to facilitate the setting.

39. Double Face Plate.—A double face plate, for the purpose of supporting work that has faced circular flanges with regularly spaced bolt holes, is shown in Fig. 24. Two face plates *a* and *b* are supported by means of a bearing on each side of the bracket *c*, which may be clamped on the floor plate of a drilling machine. The flanged piece *d*, which is to be drilled and faced at *e*, *f*, and *g*, and at corresponding points opposite *e* and *f*, is attached to the face plate by means of three arms *h*, bolted to the plate by bolts *i*, and to the flanges by bolts *j*.

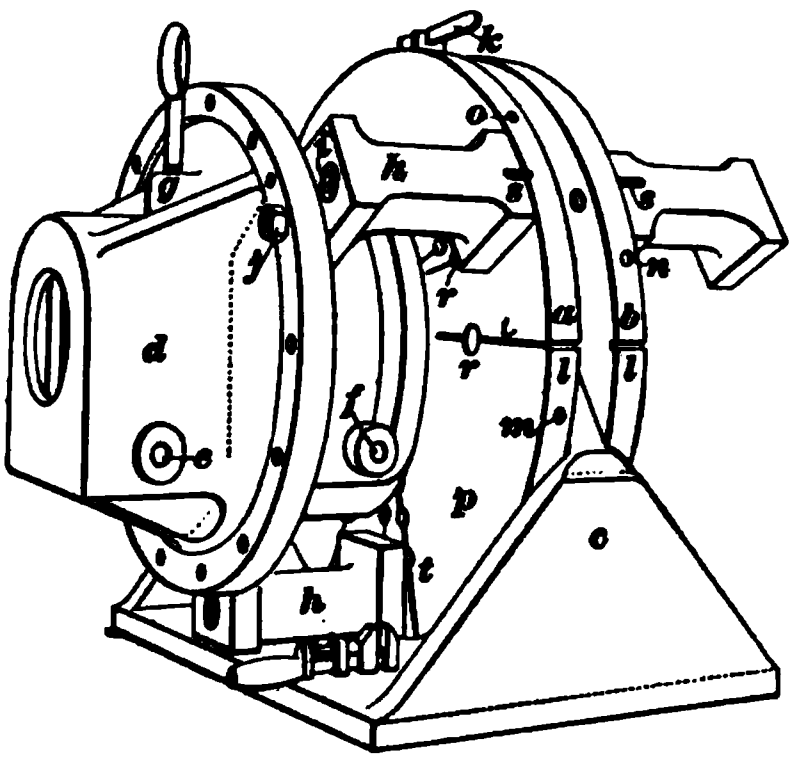

FIG. 24.

The face plates are rotated to the right position for drilling, where they are held in place by the latch *k*, which enters notches in the plates. By placing notches at proper points, holes may be drilled at any angle. In the piece shown, the holes are drilled at right angles to each other, and the face plates are held in position by the notches at *k* and *l*. The plates are rotated by means of bars inserted in a series of holes *m*, *n*, *o*, etc. about the circumference.

40. The illustration shows only one piece attached to the plate *a*. In doing work, ordinarily, another piece is attached to the plate *b*, thereby balancing the device so as to prevent springing the bracket *c*, or cramping while turning to a new position. This also permits twice as many holes to be drilled without moving the face plate as when only one piece is attached, while the service of the power crane is required only one-half as often.

The face plates may be made to take pieces of various sizes by moving the arms *h* to suitable positions. A series of holes *r* for the bolts *i* are provided in the face plates shown,

to accommodate pieces of different sizes. A large variety of work may be supported in this way by means of suitable arms. A key *s* under each arm, which fits into a corresponding keyway, as shown at *t*, together with the bolt *i*, locates the arm positively. When the piece is enough out of balance to prevent turning it, counterweights may be attached to the face plates, as in balancing work in the lathe.

41. Trunnion Supports.—Fig. 25 shows a fixture of this class for drilling duplex pump cylinders. The cylinders *a*, *b* are held by means of two plates *c*, which, on one side, have projections entering the ends of the cylinders, and, on the other side, trunnions *d*, which rest on V's on the

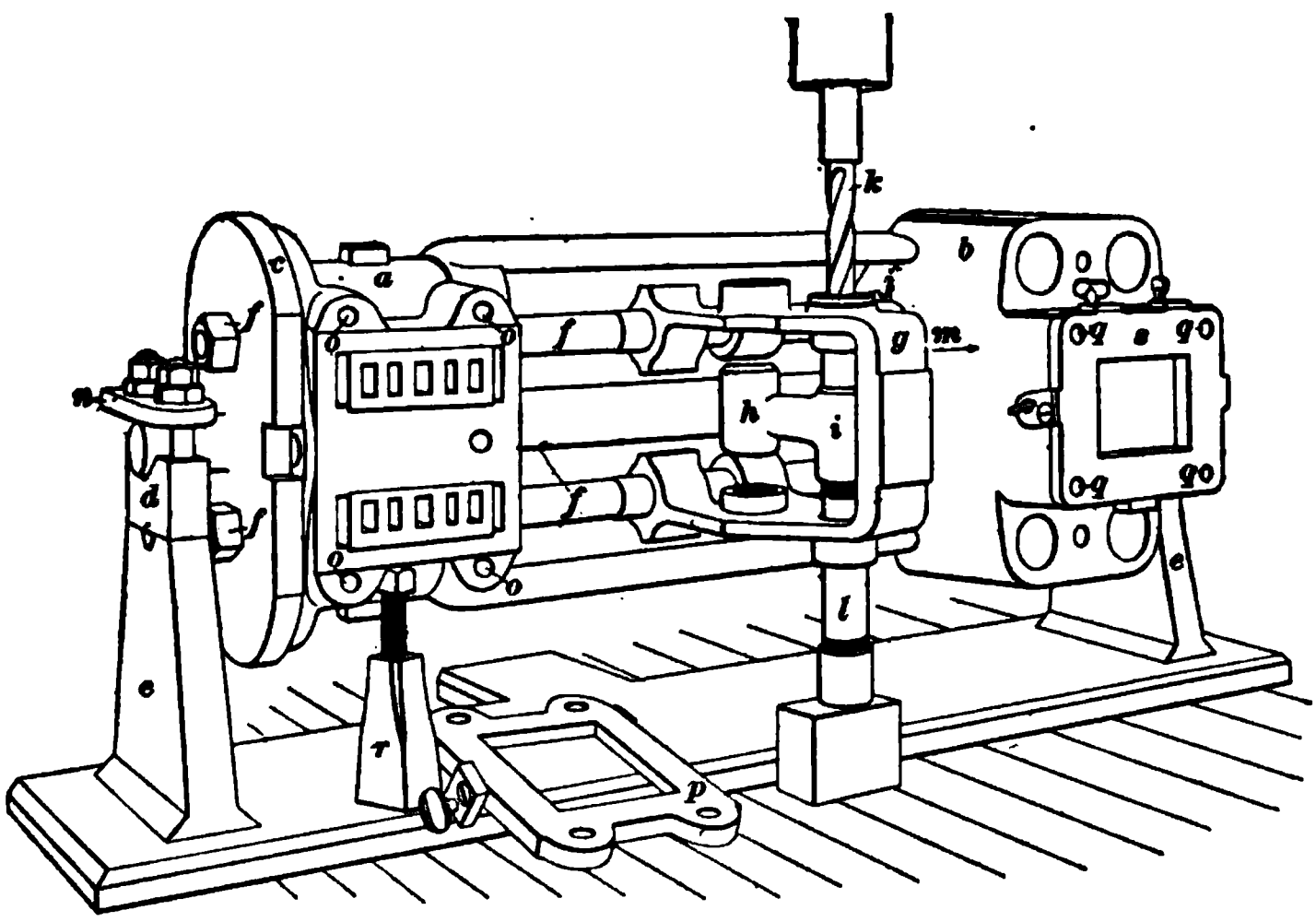

FIG. 25.

uprights *e*, *e* of the frame of the fixture. Bolts *f*, *f* hold the plates *c* in place and form guides for the jig *g*, by means of which holes are drilled in the hubs *h* and *i*. When the fixture is in position for drilling, the trunnions are fastened by means of the clamps *n*.

The illustration shows the bushing *j* and the drill *k* in place, ready to drill the hole. The hub *i* is supported on the

lower side by a piece of pipe *l*. When both the hubs *h* and *i* are drilled, the jig *g* is moved away from the hubs in the direction of the arrow *m*, and the ends of the hubs are faced by means of a double-end cutter. The clamp *n* is then loosened and the cylinders turned on the trunnions *d* to the next position to be drilled. The four holes *o*, *o*, *o*, *o* are drilled by means of the jig *p*, which is lying on the floor, while the four holes *q*, *q*, *q*, *q* are drilled with the jig *s* attached as shown. These cylinders have holes to be drilled on four sides, and must be set in as many positions. When the piece is once set up for one position, it is a simple matter to move it to any of the other positions. Screw jacks *r* are used in adjusting and holding the work. The piece may be set in position by means of a square or level.

MISCELLANEOUS TOOLS AND FIXTURES.

TREPANNING DRILL.

42. Fig. 26 illustrates a special hollow drill designed for the purpose of removing test bars from a solid piece. The drill is run into the metal as far as the central core will permit, when it is withdrawn and, at a point that will cut off the core at the bottom, a hole is drilled at right angles to it

FIG. 26.

with an ordinary twist drill. The core is then taken out and turned up to the proper dimensions for testing purposes. The point *a* of this form of **trepanning drill** can easily be removed from time to time, at small expense. It is made of hardened steel and is screwed to a soft-steel body *b*.

HUBBING TOOL.

43. A very useful **hubbing tool** is shown in Fig. 27. A hub *a* of the piece *b* is to be finished as shown at *c*. The tool with which this is done consists of a center bar *d*, which fits the bore of the hub, and a tool *e* supported on the arm *f*.

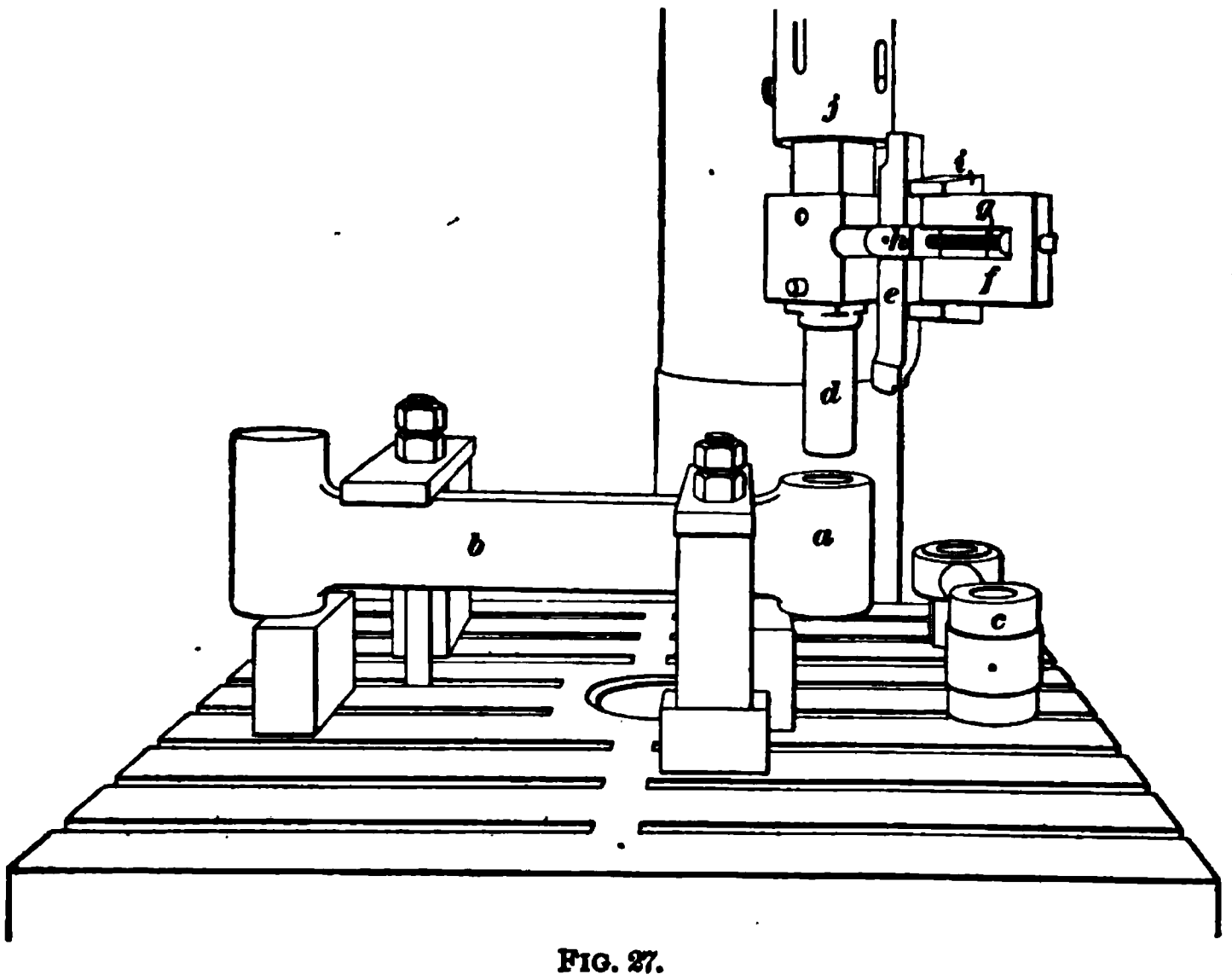

FIG. 27.

As the tool is rotated about the center of the pin, it cuts a perfect circle. The device is attached to the spindle *j* of a heavy drilling machine, the work being fastened upon the table. The radius at which the tool cuts is regulated by the adjusting screw *g* and a clamp *h i*.

SPECIAL EXTENSION ARMS FOR VERTICAL BORING-MILL TABLE.

44. On a boring mill it is necessary at times to turn work that is larger in diameter than the boring-mill table. Fig. 18, *Drilling and Boring*, Part 2, shows how such a piece may be carried by means of extension arms.

There are, however, cases where the extension arms must project so far beyond the edge of the table, and where the weight is concentrated so near the end, that additional support is needed to prevent objectionable springing. Fig. 28

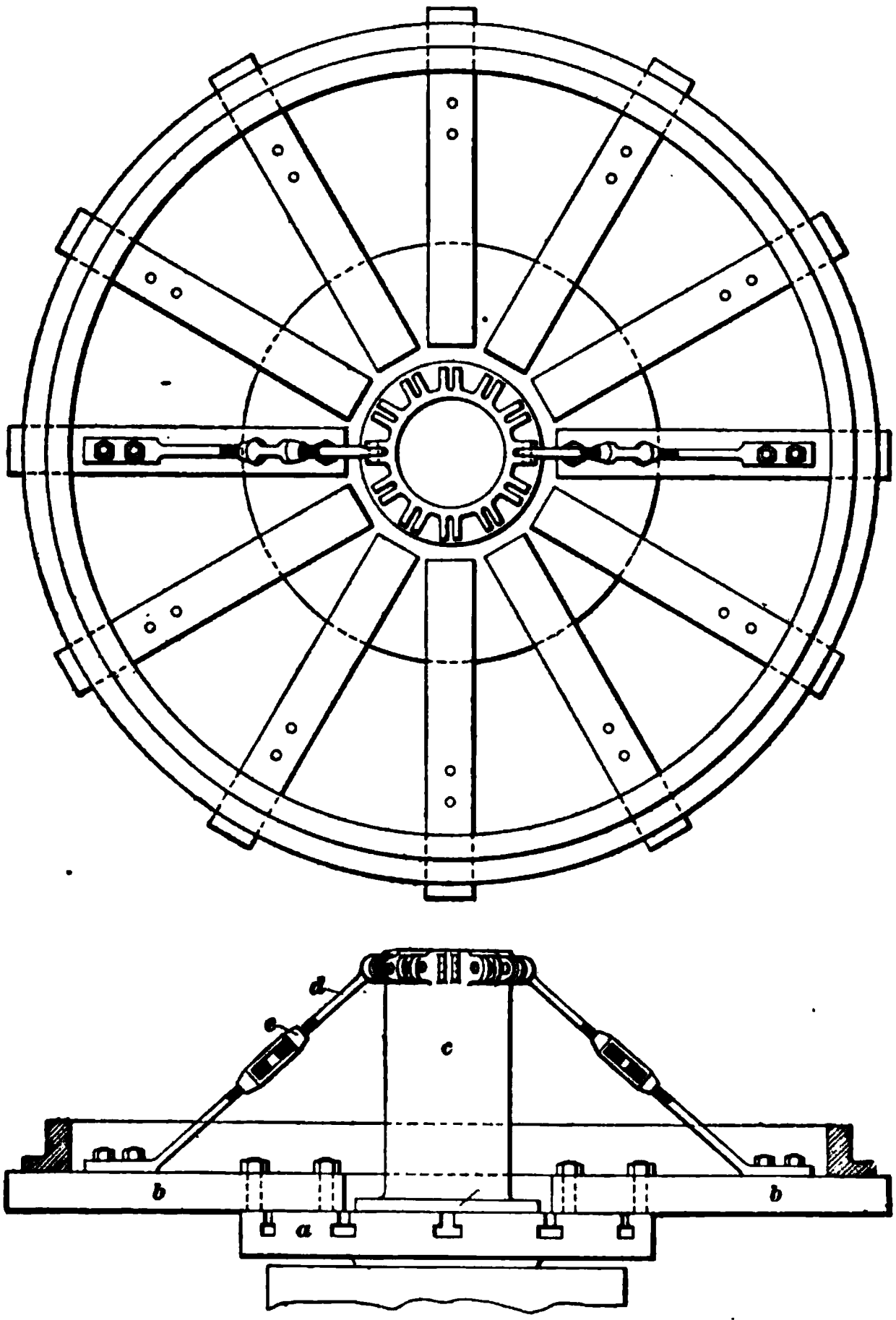

FIG. 28.

suggests a means of providing such support when the center of the piece is open, as in the case shown. The table *a* of the boring mill is of the ordinary type, with radial slots.

The extension arms *b* are bolted to the table in the ordinary way. At the center of the table a pillar *c*, with a flanged foot that is bolted to the table, furnishes the upper support for diagonal tie-rods *d* whose lower ends are bolted to the arms, thus forming an additional support. Turnbuckles *e* in the tie-rods permit the arms to be adjusted approximately level, after which a light surface cut may be taken to true them up perfectly. The piece may then be fastened in any convenient way that its shape will permit, and turned up.

This is a comparatively inexpensive and very efficient shop expedient, which, however, may or may not be a means of economy, depending on the number of pieces for which it can be used and the cost of having the work done in a shop equipped for it. Shop expedients are frequently resorted to when the work could have been done outside more cheaply. Great caution should be exercised in the construction of shop expedients, in order that true economy may be practiced.

FIXTURES FOR TURNING SPHERICAL SURFACE.

45. A special fixture for turning a spherical surface on a vertical boring mill is shown in Fig. 29, an ordinary vertical boring mill being used. The machine has two saddles. One of them *a* has bolted to it a bracket *c*, which carries a pin *d*, around which swings the link *e*. The saddle is so clamped to the cross-rail that the point *d* lies in a vertical line forming the axis of rotation of the table. The other saddle *b* is detached from the cross-feed screw in the cross-rail, and is free to move. A bracket *f*, having a roller on each end that bears on the cross-rail, is attached to the saddle so as to carry its weight, thus reducing the friction and providing a free motion along the rail. The boring bar *g* has an arm *h* attached near its upper end, which carries the fulcrum *i* of the link *e*. The link *e* continues to a point *j*, where a vertical link *k* is pivoted. At the lower end, *k* takes hold of the lever *l* at *m*. The lever *l* is pivoted at *n*

on an arm *o* attached to the bottom of the boring bar, and at its end carries the tool *p*.

46. The piece *q* to be turned is fastened centrally upon the table *r* of the boring mill. It will be seen that if the links are properly proportioned, a parallel motion is obtained, and the tool travels in an arc of a circle about the center of a sphere, and will turn a true sphere when the

FIG. 29.

table is rotated and the boring bar is fed down. In order to accomplish this, the length of the link *k* and the vertical distance between the pivots *i* and *n* must both be equal to the vertical distance between the center of the sphere to be turned and the pivot *d*; the distance *d i* must be equal to the distance from the center of the sphere to the pivot *n*,

that is, the sum of the radius of the sphere and the distance of the tool point from its pivot *n*, and the distance *ij* must be equal to the distance *n m*.

As the bar *g* is fed up, the saddle *b* will travel toward the center when turning the upper half of the sphere, in order to permit the point *i* to swing about its center *d*, and the point *n* travels in an arc of the same radius about the center of the sphere. As the bar *g* moves down from the center of the sphere *q*, the saddle *b* will again travel toward the center of rotation.

It is obvious that if the distance *d i* is made equal to the sum of the required radius of the sphere and the distance from the tool point to the pivot *n*, the tool will form a perfect sphere of the required radius. It is evident, too, that the center line of the link *n m* will always point to the center of the sphere, and the tool will cut at the same point, as it travels along. In this work, a narrow, round-nosed tool is used with a comparatively light feed, so as to insure a smooth surface.

TABLES.

47. The following tables are reprinted from the publications of the manufacturers whose names appear at the head of each.

Tables I and II give actual dimensions of Morse tapers and taper shanks. Table I gives dimensions relating to the taper of the shank and the thickness of the tang. In Table II, Figs. (*a*) and (*b*) refer to the taper of the socket alone, while (*c*) and (*d*) refer to the shank, the tang, the slot, and the key. Dimension *C* of Table I must not be confused with *d* of Table II; *C*, Table I, is to be used in forming the taper only, while *d* is the width of the parallel end of the tang, which is somewhat smaller than the small end of the taper.

Table III deals with the speed of drills of sizes ranging from $\frac{1}{16}$ inch to 2 inches in diameter, working in soft steel, iron, and brass. It will be observed that the speed

recommended for iron is somewhat higher, and the speed for brass about twice as high, as that for soft steel.

The data preceding Table III has reference to the feeds of drills and the necessity of using lubricants when drilling in steel and wrought and malleable iron.

Table IV shows the number of revolutions necessary to give a cutting speed of a certain number of feet per minute for drills of various diameters. This table is applicable to any tool traveling along a circular path.

Tables V and VI give the diameters of drills for taps of different diameters for V, U. S. Standard, Whitworth, and pipe threads.

The decimal equivalents of the numbers of the twist-drill and steel-wire gauge are given in Table VI of *Measuring Instruments.*

TABLE I.

MORSE TAPER SHANKS.

(From Morse Twist Drill and Machine Company.)

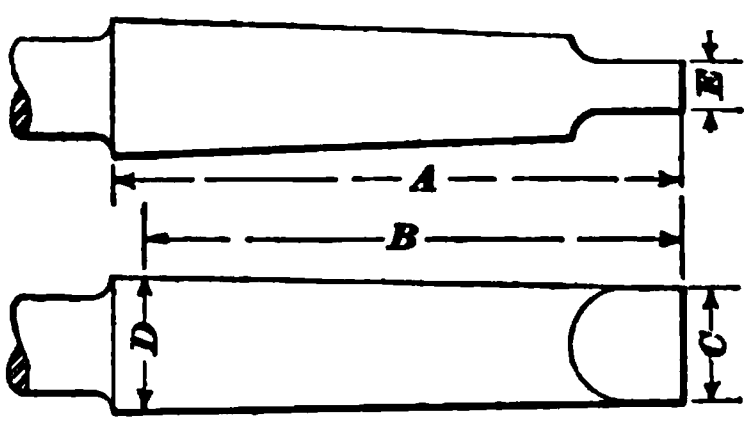

No.	*A*	*B*	*C*	*D*	*E*	Taper in 12 Inches.
1	$2\frac{9}{16}$	$2\frac{3}{8}$	.356	.475	$\frac{13}{64}$	.600
2	$3\frac{1}{16}$	$2\frac{7}{8}$	.556	.700	$\frac{1}{4}$	.602
3	$3\frac{3}{4}$	$3\frac{9}{16}$	.759	.938	$\frac{5}{16}$	.602
4	$4\frac{3}{4}$	$4\frac{1}{2}$	.997	1.231	$\frac{15}{32}$	.623
5	6	$5\frac{3}{4}$	1.446	1.748	$\frac{5}{8}$	.630
6	$8\frac{5}{16}$	8	2.077	2.494	$\frac{3}{4}$	.626

TABLE II.

MORSE TAPERS.

(From Morse Twist Drill and Machine Company.)

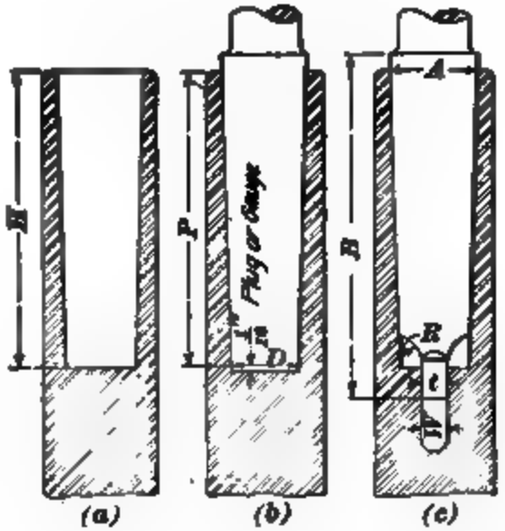

Number of Taper.	Diam. of Plug at Small End.	Diam. at End of Socket.	Standard Plug Depth.	Whole Length of Shank.	Depth of Hole.	End of Socket to Keyway.	Length of Keyway.	Width of Keyway.	Length of Tongue.	Diameter of Tongue.	Thickness of Tongue.	Radius of Mill for Tongue.	Radius of Tongue.	Shank Depth.	Taper per Foot.	Taper per Inch.	Number of Key.
	D	*A*	*P*	*B*	*H*	*K*	*L*	*W*	*T*	*d*	*t*	*R*	*a*	*S*			
1	.369	475	$2\frac{1}{8}$	$2\frac{9}{16}$	$2\frac{3}{16}$	$2\frac{1}{16}$	$\frac{3}{4}$	.213	$\frac{5}{16}$	.35	$\frac{13}{64}$	$\frac{3}{16}$	.05	$2\frac{3}{8}$	.600	.05000	1
2	.572	.700	$2\frac{9}{16}$	$3\frac{1}{16}$	$2\frac{5}{8}$	$2\frac{1}{2}$	$\frac{7}{8}$	.260	$\frac{3}{8}$	$\frac{17}{32}$	$\frac{1}{4}$	$\frac{1}{4}$	.06	$2\frac{7}{8}$	.602	.05016	2
3	.778	.938	$3\frac{3}{16}$	$3\frac{3}{4}$	$3\frac{1}{4}$	$3\frac{1}{16}$	$1\frac{1}{16}$	.322	$\frac{7}{16}$	$\frac{5}{8}$	$\frac{5}{16}$	$\frac{9}{32}$	.08	$3\frac{9}{16}$	.602	.05016	3
4	1.020	1.231	$4\frac{1}{16}$	$4\frac{3}{4}$	$4\frac{1}{8}$	$3\frac{7}{8}$	$1\frac{1}{4}$	.478	$\frac{1}{2}$	$\frac{31}{32}$	$\frac{15}{32}$	$\frac{5}{16}$	.10	$4\frac{1}{2}$	.623	05191	4
5	1.475	1.748	$5\frac{3}{16}$	6	$5\frac{1}{4}$	$4\frac{15}{16}$	$1\frac{1}{2}$	.635	$\frac{5}{8}$	$1\frac{13}{32}$	$\frac{5}{8}$	$\frac{3}{8}$	.12	$5\frac{3}{4}$	.630	.05250	5
6	2.116	2.494	$7\frac{1}{4}$	$8\frac{5}{16}$	$7\frac{3}{8}$	7	$1\frac{3}{4}$	.760	$\frac{7}{8}$	2	$\frac{3}{4}$	$\frac{1}{2}$	.15	8	626	05216	6

TABLE III.

THE SPEED AND FEED OF DRILLS.

(*From Cleveland Twist Drill Company.*)

This table has been compiled from memoranda furnished us, at our request, by about 500 of the best known and most successful manufacturers in this country. We believe that these speeds should *not be exceeded* under ordinary circumstances. A feed of 1 inch in from 95 to 125 revolutions is all that should be required according to the size of the drill. At these speeds it will be necessary to use plenty of oil, or a solution of oil, soda, and water, when drilling steel, wrought, or malleable iron.

It is based on a speed of periphery of the drill of 30 feet per minute for steel, 35 feet per minute for iron, and 60 feet per minute for brass. It will be found advisable to vary the speed given in the table somewhat, according as the material to be drilled is more or less refractory.

Diameter of Drill.	Speed for Soft Steel.	Speed for Iron.	Speed for Brass.	Diameter of Drill.	Speed for Soft Steel.	Speed for Iron.	Speed for Brass.
$\frac{1}{16}$	1,824	2,128	3,648	$1\frac{1}{16}$	108	125	215
$\frac{1}{8}$	912	1,064	1,824	$1\frac{1}{8}$	102	118	203
$\frac{3}{16}$	608	710	1,216	$1\frac{3}{16}$	96	112	192
$\frac{1}{4}$	456	532	912	$1\frac{1}{4}$	91	106	182
$\frac{5}{16}$	365	425	730	$1\frac{5}{16}$	87	101	174
$\frac{3}{8}$	304	355	608	$1\frac{3}{8}$	83	97	165
$\frac{7}{16}$	260	304	520	$1\frac{7}{16}$	80	93	159
$\frac{1}{2}$	228	266	456	$1\frac{1}{2}$	76	89	152
$\frac{9}{16}$	203	236	405	$1\frac{9}{16}$	73	85	145
$\frac{5}{8}$	182	213	365	$1\frac{5}{8}$	70	82	140
$\frac{11}{16}$	166	194	332	$1\frac{11}{16}$	68	79	135
$\frac{3}{4}$	152	177	304	$1\frac{3}{4}$	65	76	130
$\frac{13}{16}$	140	164	280	$1\frac{13}{16}$	63	73	125
$\frac{7}{8}$	130	152	260	$1\frac{7}{8}$	60	71	122
$\frac{15}{16}$	122	142	243	$1\frac{15}{16}$	59	69	118
1	114	133	228	2	57	67	114

NOTE.—The above table gives speeds in revolutions per minute.

TABLE IV.

CUTTING SPEEDS.

(From Beaman & Smith.)

Feet per Minute.	5	10	15	20	25	30	35	40	45	50
Diam.	Revolutions per Minute.									
$\frac{1}{4}$	38.2	76.4	114.6	152.9	191.1	229.3	267.5	305.7	344.0	382.2
$\frac{5}{8}$	30.6	61.2	91.8	122.5	153.1	183.7	214.3	244.9	275.5	306.1
$\frac{1}{2}$	25.4	50.8	76.3	101.7	127.1	152.5	178.0	203.4	228.8	254.2
$\frac{7}{8}$	21.8	43.6	65.5	87.3	109.1	130.9	152.7	174.5	196.3	218.9
1	19.1	38.2	57.3	76.4	95.5	114.6	133.8	152.9	172.0	191.1
$1\frac{1}{8}$	17.0	34.0	51.0	68.0	85.0	102.0	119.0	136.0	153.0	170.0
$1\frac{1}{4}$	15.3	30.6	45.8	61.2	76.3	91.8	106.9	122.5	137.4	153.1
$1\frac{3}{8}$	13.9	27.8	41.7	55.6	69.5	83.3	97.2	111.1	125.0	138.9
$1\frac{1}{2}$	12.7	25.4	38.2	50.8	63.7	76.3	89.2	101.7	114.6	127.1
$1\frac{5}{8}$	11.8	23.5	35.0	47.0	58.8	70.5	82.2	93.9	105.7	117.4
$1\frac{3}{4}$	10.9	21.8	32.7	43.6	54.5	65.5	76.4	87.3	98.2	109.1
$1\frac{7}{8}$	10.2	20.4	30.6	40.7	50.9	61.1	71.3	81.5	91.9	101.9
2	9.6	19.1	28.7	38.2	47.8	57.3	66.9	76.4	86.0	95.5
$2\frac{1}{4}$	8.5	17.0	25.4	34.0	42.4	51.0	59.4	68.0	76.2	85.0
$2\frac{1}{2}$	7.6	15.3	22.9	30.6	38.2	45.8	53.5	61.2	68.8	76.3
$2\frac{3}{4}$	6.9	13.9	20.8	27.8	34.7	41.7	48.6	55.6	62.5	69.5
3	6.4	12.7	19.1	25.5	31.8	38.2	44.6	51.0	57.3	63.7
$3\frac{1}{2}$	5.5	10.9	16.4	21.8	27.3	32.7	38.2	43.6	49.1	54.5
4	4.8	9.6	14.3	19.1	23.9	28.7	33.4	38.2	43.0	47.8
$4\frac{1}{2}$	4.2	8.5	12.7	16.9	21.2	25.4	29.6	34.0	38.1	42.4
5	3.8	7.6	11.5	15.3	19.1	22.9	26.7	30.6	34.4	38.2
$5\frac{1}{2}$	3.5	6.9	10.4	13.9	17.4	20.8	24.3	27.8	31.3	34.7
6	3.2	6.4	9.6	12.7	15.9	19.1	22.3	25.5	28.7	31.8
7	2.7	5.5	8.1	10.9	13.6	16.4	19.1	21.8	24.6	27.3
8	2.4	4.8	7.2	9.6	11.9	14.3	16.7	19.1	21.1	23.9
9	2.1	4.2	6.4	8.5	10.6	12.7	14.9	17.0	19.1	21.2
10	1.9	3.8	5.7	7.6	9.6	11.5	13.4	15.3	17.2	19.1
11	1.7	3.5	5.2	6.9	8.7	10.4	12.2	13.9	15.6	17.4
12	1.6	3.2	4.8	6.4	8.0	9.6	11.1	12.7	14.3	15.9
13	1.5	2.9	4.4	5.9	7.3	8.8	10.3	11.8	13.2	14.7
14	1.4	2.7	4.1	5.5	6.8	8.1	9.6	10.9	12.3	13.6
15	1.3	2.5	3.8	5.1	6.4	7.6	8.9	10.2	11.5	12.7
16	1.2	2.4	3.6	4.8	6.0	7.2	8.4	9.6	10.7	11.9
17	1.1	2.2	3.4	4.5	5.6	6.7	7.9	9.0	10.1	11.2
18	1.1	2.1	3.2	4.2	5.3	6.4	7.4	8.5	9.6	10.6
19	1.0	2.0	3.0	4.0	5.0	6.0	7.0	8.0	9.1	10.1
20	1.0	1.9	2.9	3.8	4.8	5.7	6.7	7.6	8.6	9.6
21	.9	1.8	2.7	3.6	4.5	5.5	6.4	7.3	8.1	9.1
22	.9	1.7	2.6	3.5	4.3	5.2	6.1	6.9	7.8	8.7
23	.8	1.7	2.5	3.3	4.1	5.0	5.8	6.6	7.5	8.3
24	.8	1.6	2.4	3.2	4.0	4.8	5.6	6.4	7.2	8.0
25	.8	1.5	2.3	3.1	3.8	4.6	5.3	6.1	6.9	7.6
26	.7	1.5	2.2	2.9	3.7	4.4	5.1	5.9	6.6	7.3
27	.7	1.4	2.1	2.8	3.5	4.2	5.0	5.7	6.4	7.1
28	.7	1.4	2.0	2.7	3.4	4.1	4.8	5.5	6.1	6.8
29	.7	1.3	2.0	2.6	3.3	4.0	4.6	5.3	5.9	6.6
30	.6	1.3	1.9	2.5	3.2	3.8	4.5	5.1	5.7	6.4

TABLE V.

TAP DRILLS.

(*From New Process Twist Drill Company.*)

The following table shows the different sizes of drills that should be used when a full thread is to be tapped. The sizes given are practically correct.

Diameter of Tap.	Number of Threads to Inch.	Drill for V Thread.	Drill for U. S. S. Thread.	Drill for Whitworth Thread.
$\frac{1}{4}$	16 18 20	$\frac{5}{32}$ $\frac{5}{32}$ $\frac{11}{64}$	$\frac{3}{16}$	$\frac{3}{16}$
$\frac{3}{32}$	16 18 20	$\frac{3}{16}$ $\frac{13}{64}$ $\frac{21}{64}$		
$\frac{5}{16}$	16 18	$\frac{7}{32}$ $\frac{15}{64}$	$\frac{1}{4}$	$\frac{15}{64}$
$\frac{11}{32}$	16 18	$\frac{1}{4}$ $\frac{17}{64}$		
$\frac{3}{8}$	14 16 18	$\frac{1}{4}$ $\frac{9}{32}$ $\frac{9}{32}$	$\frac{9}{32}$	$\frac{9}{32}$
$\frac{13}{32}$	14 16 18	$\frac{19}{64}$ $\frac{21}{64}$ $\frac{21}{64}$		
$\frac{7}{16}$	14 16	$\frac{21}{64}$ $\frac{11}{32}$	$\frac{11}{32}$	$\frac{11}{32}$
$\frac{15}{32}$	14 16	$\frac{23}{64}$ $\frac{3}{8}$		
$\frac{1}{2}$	12 13 14	$\frac{3}{8}$ $\frac{25}{64}$ $\frac{25}{64}$	$\frac{13}{32}$	$\frac{3}{8}$
$\frac{17}{32}$	12 13 14	$\frac{13}{32}$ $\frac{27}{64}$ $\frac{27}{64}$		
$\frac{9}{16}$	12 14	$\frac{7}{16}$ $\frac{29}{64}$	$\frac{7}{16}$	
$\frac{19}{32}$	12 14	$\frac{15}{32}$ $\frac{31}{64}$		
$\frac{5}{8}$	10 11 12	$\frac{15}{32}$ $\frac{1}{2}$ $\frac{1}{2}$	$\frac{1}{2}$	$\frac{1}{2}$
$\frac{21}{32}$	10 11 12	$\frac{1}{2}$ $\frac{17}{32}$ $\frac{17}{32}$		
$\frac{11}{16}$	11 12	$\frac{9}{16}$ $\frac{9}{16}$		
$\frac{23}{32}$	11 12	$\frac{19}{32}$ $\frac{19}{32}$		
$\frac{3}{4}$	10 11 12	$\frac{19}{32}$ $\frac{5}{8}$ $\frac{5}{8}$	$\frac{5}{8}$	$\frac{5}{8}$
$\frac{25}{32}$	10 11 12	$\frac{5}{8}$ $\frac{21}{32}$ $\frac{21}{32}$		
$\frac{13}{16}$	10	$\frac{21}{32}$		
$\frac{27}{32}$	10	$\frac{11}{16}$		
$\frac{7}{8}$	9 10	$\frac{45}{64}$ $\frac{23}{32}$	$\frac{23}{32}$	$\frac{23}{32}$
$\frac{29}{32}$	9 10	$\frac{47}{64}$ $\frac{3}{4}$		
$\frac{15}{16}$	9	$\frac{49}{64}$		
$\frac{31}{32}$	9	$\frac{51}{64}$		
1	8	$\frac{13}{16}$	$\frac{27}{32}$	$\frac{27}{32}$
$1\frac{1}{32}$	8	$\frac{53}{64}$		
$1\frac{1}{16}$	8	$\frac{55}{64}$		
$1\frac{3}{32}$	8	$\frac{57}{64}$		
$1\frac{1}{8}$	7 8	$\frac{29}{32}$ $\frac{15}{16}$	$\frac{15}{16}$	$\frac{15}{16}$
$1\frac{5}{32}$	7 8	$\frac{15}{16}$ $\frac{31}{32}$		
$1\frac{3}{16}$	7 8	$\frac{61}{32}$ 1		
$1\frac{7}{32}$	7 8	1		
$1\frac{1}{4}$	7	$1\frac{1}{32}$	$1\frac{1}{16}$	$1\frac{1}{16}$
$1\frac{9}{32}$	7	$1\frac{1}{16}$		
$1\frac{5}{16}$	7	$1\frac{3}{32}$		
$1\frac{11}{32}$	7	$1\frac{1}{8}$		
$1\frac{3}{8}$	6	$1\frac{1}{8}$	$1\frac{5}{32}$	$1\frac{5}{32}$
$1\frac{13}{32}$	6	$1\frac{5}{32}$		
$1\frac{7}{16}$	6	$1\frac{5}{32}$		
$1\frac{15}{32}$	6	$1\frac{3}{16}$		
$1\frac{1}{2}$	6	$1\frac{15}{64}$	$1\frac{9}{32}$	$1\frac{9}{32}$
$1\frac{17}{32}$	6	$1\frac{9}{32}$		
$1\frac{9}{16}$	6	$1\frac{9}{32}$		
$1\frac{19}{32}$	6	$1\frac{5}{16}$		
$1\frac{5}{8}$	5 $5\frac{1}{2}$	$1\frac{9}{32}$ $1\frac{5}{16}$	$1\frac{3}{8}$	$1\frac{23}{64}$
$1\frac{21}{32}$	5 $5\frac{1}{2}$	$1\frac{5}{16}$ $1\frac{11}{32}$		
$1\frac{11}{16}$	5 $5\frac{1}{2}$	$1\frac{11}{32}$ $1\frac{3}{8}$		
$1\frac{23}{32}$	5 $5\frac{1}{2}$	$1\frac{3}{8}$ $1\frac{3}{8}$		
$1\frac{3}{4}$	5	$1\frac{13}{32}$	$1\frac{1}{2}$	$1\frac{1}{2}$

TABLE VI.

TWIST DRILLS FOR PIPE TAPS.

(*First three columns from Standard Tool Company.*)

The sizes of twist drills to be used in boring holes to be reamed with pipe reamer and threaded with pipe tap are as follows:

Size. Inches.	Number of Threads Per Inch.	Size of Drill.	Size of Drill In Nearest $\frac{1}{64}$ Inch.
$\frac{1}{8}$	27	.3281	$\frac{21}{64}$
$\frac{1}{4}$	18	.4531	$\frac{29}{64}$
$\frac{3}{8}$	18	.5937	$\frac{19}{32}$
$\frac{1}{2}$	14	.7187	$\frac{23}{32}$
$\frac{3}{4}$	14	.9375	$\frac{15}{16}$
1	$11\frac{1}{2}$	1.1875	$1\frac{3}{16}$
$1\frac{1}{4}$	$11\frac{1}{2}$	1.4687	$1\frac{15}{32}$
$1\frac{1}{2}$	$11\frac{1}{2}$	1.7187	$1\frac{23}{32}$
2	$11\frac{1}{2}$	2.1875	$2\frac{3}{16}$
$2\frac{1}{2}$	8	2.6875	$2\frac{11}{16}$
3	8	3.3125	$3\frac{5}{16}$
$3\frac{1}{2}$	8	3.8125	$3\frac{13}{16}$
4	8	4.3125	$4\frac{5}{16}$

NOTE.—A drill $\frac{1}{64}$ inch larger than the size given in the table is sometimes used when one of the given size is not available.

RECENT TESTS OF TWIST DRILLS.

48. Bickford Experimental Feeds and Speeds. It has recently been shown by experiments made by the Bickford Drill Company that with drilling machines of very stiff design, heavier feeds may be used than have heretofore been used in ordinary practice, and that the breaking of

drills has been due largely to the spring of the drilling machine.

It must not be inferred, however, that these experimental feeds can be used in ordinary machines, as extraordinary stiffness in the horizontal arm and vertical column is required to use them successfully. Even with such machines it may not be wise to use them in ordinary practice, and it is probable that slightly lighter feeds may be established for general use with machines of strong design.

The results of these experiments are given below, as they will suggest approximately the feeds that can safely be taken in machine tools of great rigidity. Many drills were tested to destruction in ordinary cast iron, and some tests were made in machinery steel with larger drills but very few broke. In one case a $1\frac{9}{16}$-inch drill turned a shaving of machinery steel $\frac{9}{32}$ inch in thickness and stopped the machine, but the drill did not break.

Table VII gives the feeds used in ordinary cast iron without the least injury to the drills. These feeds are almost four times as great as those generally advocated at the present time.

Table VIII gives the feeds at which the drills broke.

Table IX gives the speeds at which the drills were run.

TABLE VII.

FEEDS USED IN ORDINARY CAST IRON WITHOUT INJURY.

Diameter of Drill in Inches.	Feed, in Inches, Per Revolution.
$\frac{1}{4}$ to $\frac{1}{2}$	.025
$\frac{1}{2}$ to 1	.035
1 to $1\frac{1}{2}$	.047

TABLE VIII.

FEEDS AT WHICH THE DRILLS BROKE IN ORDINARY CAST IRON.

Size of Drill. Inch.	Feed Per Revolution at Which Drill Broke. Inch.	Size of Drill. Inch.	Feed Per Revolution at Which Drill Broke. Inch.
$\frac{1}{16}$	.007	$\frac{3}{16}$	.035
$\frac{3}{32}$	.010	$\frac{1}{4}$	.047
$\frac{1}{8}$	.014	$\frac{5}{16}$	.064
$\frac{5}{32}$	.020		

TABLE IX.

THE SPEEDS AT WHICH THE DRILLS WERE RUN.

Size of Drill.	Revolutions Per Minute.	Cutting Speed Feed Per Minute.	Size of Drill.	Revolutions Per Minute.	Cutting Speed Feed Per Minute.
$\frac{1}{2}$	267	35	$1\frac{3}{4}$	61	28
$\frac{5}{8}$	222	36	2	51	26
$\frac{3}{4}$	184	36	$2\frac{1}{4}$	42	25
$\frac{7}{8}$	153	35	$2\frac{1}{2}$	35	23
1	128	33	$2\frac{3}{4}$	29	21
$1\frac{1}{8}$	106	31	3	24	19
$1\frac{1}{4}$	88	29	$3\frac{1}{4}$	20	17
$1\frac{1}{2}$	73	28	$3\frac{1}{2}$	17	15

MILLING-MACHINE WORK.

(PART 1.)

INTRODUCTION.

DEFINITIONS.

1. Milling may be defined as the process of removing metal by a cutting tool that is rotated about its own axis and has one or more cutting edges that are successively brought against the work. Any machine in which this process is performed is called a **milling machine.**

Milling machines are made in a great variety of forms to suit different conditions and requirements; they are given special names in accordance with the class of service for which they are intended, and also in accordance with their design.

CLASSIFICATION OF MILLING OPERATIONS.

2. The cutting operations grouped under the general term of "milling" are *plain milling*, *side milling*, *angular milling*, *grooving*, *form milling*, *profiling*, and *routing*.

The first three operations named are performed on, and result in the production of, plane surfaces; curved or irregular surfaces are produced by the last three operations.

3. Plain milling may be defined as the performing of the cutting operation on a plane surface that is *parallel* to the axis of rotation of the cutting tool.

For notice of copyright, see page immediately following the title page.

4. Side milling is always understood to mean that the cutting operation is performed on a plane surface that is *perpendicular* to the axis of rotation of the cutting tool.

5. Angular milling invariably refers to the machining of plane surfaces at an inclination to the axis of rotation of the cutting tool.

6. Grooving, in a certain sense, is a self-explanatory term that refers to the cutting of grooves, or slots, that may have any profile and follow a straight, a helical, or an irregular path.

7. Form milling is a class of milling in which the surfaces operated on are not plane, but which have the same profile throughout the direction in which the work is fed against the cutter. This is most commonly a horizontal direction, but may occasionally be a vertical or an inclined one.

8. Profiling is usually understood to be a milling operation in which the work is guided in a predetermined path by a templet having a suitable outline.

9. Routing is a name given to a milling operation in which the work is presented to the cutter and then guided by hand, whence it follows that the result depends entirely on the skill of the operator.

10. The definitions here given are believed to be in accordance with the most general practice; since there is no universally accepted agreement in regard to them, it must be expected that some people will use the terms in a different sense.

CLASSIFICATION OF MILLING MACHINES.

11. Milling machines may be classified as *plain*, *vertical*, *universal*, *multispindle*, and *special*.

12. Plain milling machines are intended for the finishing of surfaces that require the motion of the work to be in a straight line during the cutting operation. They

are so arranged that the work can be fed to the cutting tool, or vice versa, in a vertical direction, and also in two horizontal directions at right angles to each other. The axis of rotation of the cutting tool is normally horizontal.

13. Vertical milling machines derive their name from the fact that the axis of rotation of the cutting tool is vertical. They are usually so arranged that the cutting tool can be fed toward or away from the work in a vertical direction, while the work can be fed to the cutting tool in two horizontal directions at right angles to each other. In some cases the machine is so arranged that the work can be revolved in a horizontal plane for the purpose of finishing circular surfaces.

14. Universal milling machines are so called by virtue of the fact that the numerous attachments furnished with them adapt these machines to a very wide range of work; they can be used for almost every conceivable milling operation within the capacity of the machine. The axis of rotation of the cutting tool is usually horizontal; the work can be fed to the cutting tool in a vertical direction, and also in two horizontal directions; the angle between the latter can be changed within the limits imposed by the design of the machine. By means of special devices the work can be rotated at the same time that it is moved longitudinally in a horizontal direction; this adapts the machine for the production of helical and spiral work. The work can also be rotated in these machines through a definite part of a revolution for each individual cutting operation.

The special devices fitted to a universal milling machine may also be applied to a plain or a vertical milling machine, which are thus to some extent converted into universal milling machines. They will rarely have as wide a range of application, however, as a machine especially designed to be a universal milling machine.

15. Multispindle milling machines, as implied by the name, are fitted with two or more spindles that

carry the cutting tools. Each spindle, and hence each cutting tool, is usually made to be independently adjustable in relation to the work. In most machines of this class, the work can be moved in a straight line in one direction only. Multispindle milling machines are intended for finishing several surfaces simultaneously, and are usually employed for heavy work only.

16. Special milling machines may take any conceivable form that will adapt them for the class of work for which they are designed, but no matter in what manner they are constructed, the principles of operation will be the same as those of any regular milling machines.

CONSTRUCTION OF MACHINE.

ESSENTIAL PARTS.

17. A milling machine consists of certain essential parts, which in some form or other must exist in any of its numerous modifications. The essential parts are the *frame*, the *spindle*, the *table*, the *feed-mechanism*, and the *cutting tool*. The function of the frame is the supporting of the spindle, table, and feed-mechanism. The spindle, which by suitable means is revolved in bearings provided for it in the frame, carries the cutting tool. The function of the table is to serve as a support for the work, which may be attached either directly to the table or to holding devices carried by it. The feed-mechanism serves to move the work past the cutting tool; it may operate directly upon the table, or upon the spindle, or upon both. The function of the cutting tool is self-explanatory.

CONSTRUCTION.

18. The universal milling machine is the most advanced form for general work, and embodies all the features found in other types. For this reason it is here selected and

described. As far as the universal machines of various makes are concerned, their general arrangement is similar

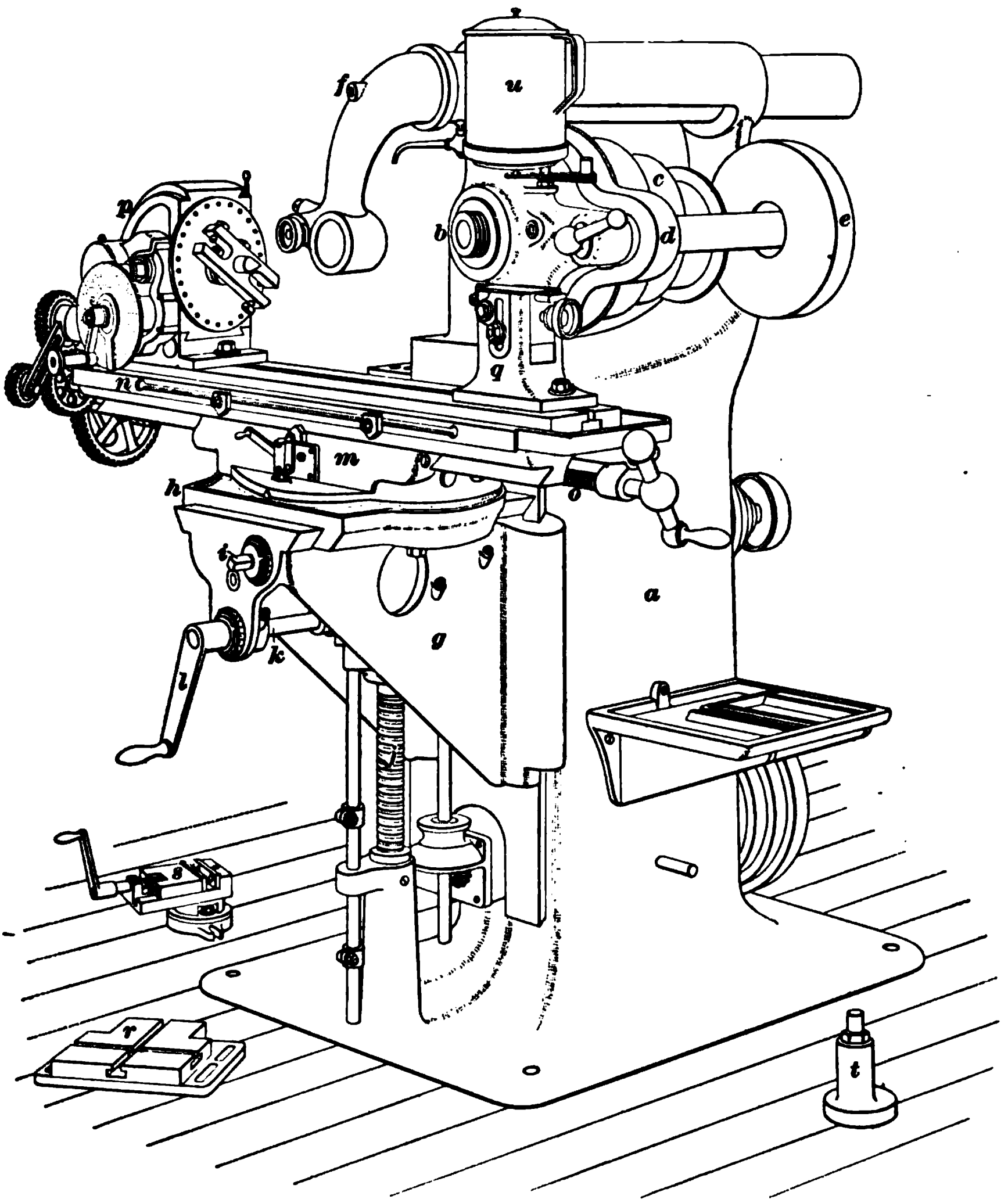

FIG. 1.

to that of the machine illustrated in Fig. 1; they differ only in the design of the details, which are modified in accordance

with the personal experience and judgment of their respective designers.

19. Referring to the figure, it is seen that the general form of the **frame** *a* is that of a column or pillar. This frame carries the horizontal **spindle** *b* near its top. The spindle is driven by a belt from a line shaft or countershaft; the belt is placed on the **cone pulley** *c*. The particular design of machine shown is back-geared in order to provide for a larger number of speed changes. The back gearing is similar to that employed for engine lathes and is operated in the same manner, in this case by a handle. In the machine illustrated, the back gears are protected by light metal **guards** shown at *d* and *e*. The spindle is bored out tapering at the front end to receive the shank of the cutting tool or an **arbor** to which the cutting tool is attached. An adjustable arm, or **outboard bearing** sliding in bearings parallel to the spindle, can be used for supporting the free end of the arbor when heavy cuts are taken; when not in use it can be swung out of the way. The arm can be rigidly clamped in position after it has been adjusted.

20. A vertical slide is formed on the front of the frame *a*; a **knee** *g* is fitted to this slide, which is in a plane at right angles to the axis of the spindle. The top of the knee is at right angles to the surface of the slide on the frame, and carries the **clamp bed** *h*, which can be moved along it in a straight line parallel to the axis of the spindle by means of the **cross-feed screw** *i*. The knee can be raised and lowered by turning the **elevating screw** *j*; for the sake of convenience, this is operated from the front of the knee by turning the shaft *k*, which carries a bevel gear that meshes with one on the elevating screw. A detachable handle *l* fits the square end of *i* and *k*. The cross-feed screws and elevating screws are supplied with dials graduated to indicate movements by thousandths of an inch.

21. The clamp bed *h* carries the **saddle** *m*, which is pivoted to it, and which can be rotated through an arc of about 45°; suitable clamping devices are provided for

clamping the saddle to the clamp bed in any position to which it may be swung. The upper part of the saddle forms a slide that receives the **table** *n*; this slides in a line parallel to the top surface of the knee. The table can be moved by means of the **feed-screw** *o*, which is operated by the handle shown. The top of the clamp bed is graduated into degrees; a zero mark on the saddle, by its coincidence with the zero line of the graduation, indicates when the line of motion of the table is *at right angles* to the axis of the spindle, and by its coincidence with the other graduations shows how many degrees the line of motion differs from its position at right angles with the axis of the spindle.

22. The table is fitted with a detachable **index head** *p* and a detachable **tailstock** *q*. The index head and tailstock are fitted with centers between which work may be placed. The spindle of the index head can be rotated by means of a worm-wheel and worm; it is so arranged that it can be swung in a vertical plane around the axis of the worm from slightly below a horizontal position to somewhat beyond a vertical position. On the bottom of the index head are tongues that fit a longitudinal T slot in the table; they insure that the axis of the index-head spindle is always in the same vertical plane as the line of motion of the table. The front end of the index-head spindle is often threaded to receive face plates, chucks, or special devices for holding work; the spindle is almost invariably made hollow, and is bored out tapering to receive a live center or arbors.

23. When it is necessary to set the spindle in the index head at an angle to the line of motion of the table, owing to the form of the work clamped to the index head, the head is detached from the table; a **raising block** *r* is bolted to the table in such a position that one of its two T slots is at the required angle, and the index head is attached to that T slot of the raising block. When the diameter of the work is so large that it cannot be attached to the index head if the latter is fastened directly to the table, the index head is raised by means of the raising block

When no raising block is available, parallel strips may be used for the same purpose. The tailstock *q* has the dead center mounted in a block fitted to a slot of the tailstock. This block can be raised or lowered a certain amount in order to bring the dead center in line with the live center when tapering work is placed between them.

24. A **milling-machine vise** *s*, which can be rotated and then clamped in any position to the table, is used for holding work. When comparatively slender work is to be milled between the centers, it will naturally spring under the cutting operation. This tendency is counteracted by placing a **center rest** or **steady rest** *t* on the table and adjusting it properly to support the work. An oil tank is shown at *u*.

25. The machine shown is provided with an **automatic feed** for the table, which, by means of adjustable tappets, can be made to stop at a predetermined point. A vertical feed for the knee is also provided. The knee and the clamp bed may be clamped rigidly to their slides at any point by a suitable arrangement. Adjustable stops are also provided for the knee and table; they are used when a number of duplicate pieces are to be milled, and the feeding is done by hand.

26. The inside of the frame of universal milling machines usually serves as a cupboard in which cutters, change gears, collets, arbors, wrenches, and other small parts may be conveniently kept.

27. When milling machines of different types are carefully examined, they will be found to have some of the features of the universal milling machine embodied in them in one form or another. In one case the cutting tool may be fed to the work, and in another case the work may be fed to the cutting tool; in one case the feeding may be accomplished by a lever operating upon a pinion and rack, and in another case the feeding may be done by turning a feed-screw; no matter, however, in what form the essential

parts appear and what their construction may be, it will be found that the fundamental principles and the function of the essential parts are the same in each case.

Furthermore, a person that can operate one type of machine successfully can, after getting accustomed to the methods of adjustment of another type, operate it with equal ease. As far as special methods of adjustment are concerned, they can always be readily traced out by a little intelligent study. For this reason, no attempt is here made to describe all the different types and the subclasses of each type in detail.

ADVANTAGES OF MILLING MACHINES.

28. It was conceded for a long time that milling was superior to other processes of machining by reason of the fact that by the use of properly formed cutting tools, pieces of work having an intricate profile could be duplicated within such small limits of variation as to be interchangeable. This could be done at a rate of speed that was not feasible with any other method of machine work, and consequently at a lower time cost per piece. The milling machine can truly be said to have been the most potent factor that made possible the application of the interchangeable system to the economic production of work done in large quantities, as firearms, sewing machines, typewriters, etc. As a matter of fact, the milling machine was developed originally in armories manufacturing small firearms, and for a long time was unknown outside of them. Of late years, it is gradually becoming recognized that the process of milling cannot only be applied to a great variety of work usually performed in the planer, shaper, slotter, and lathe, but that also, by reason of the multiplicity of cutting edges and the continuous cutting operation, the work in many instances can be machined by milling at a much lower time cost.

29. While intelligent superintendence, i. e., the making of the tools and special fixtures for the milling machines,

calls for skill of a very high order, the fact remains that when the machine operates on work done in large quantities, the actual placing of the work into it, taking the cut, and removing the work can be safely entrusted to comparatively unskilled labor after the machine has been properly adjusted by a skilled workman. In such a case, one machine tender can often look after several machines without inconvenience. In consequence of this, there will be a material reduction in the labor cost per piece.

30. When the milling machine is used as a substitute for other machine tools, on work other than duplicate work, the machine cannot be placed in the charge of unskilled persons if its production is to compete in cost with that of other machine tools. In such cases, there is at least as much skill called for as is required for the successful operation of the machine tool whose place is taken by the milling machine.

MILLING CUTTERS.

CLASSIFICATION OF CUTTERS.

31. The cutting tool used for milling is known as a **milling cutter.** Milling cutters found in practice may be classified as *plain milling cutters*, also called *common*, *axial*, and *surface milling cutters*, *side milling cutters*, also called *face* or *butt mills*, *angular milling cutters*, *end milling cutters*, and *form cutters*. Side mills and end mills are also called *radial mills*. Any one of these cutters may be a solid, an inserted-tooth, a shank, or a shell cutter, and it may be fastened to the spindle of the milling machine by holding it in a chuck, by clamping it to an arbor, by screwing it to the spindle or to a shank fitted to the latter, or, finally, it may be formed with a shank that fits the spindle.

32. Milling cutters are called **right-handed** and **left-handed** in accordance with their direction of rotation when cutting. In order to tell whether a cutter is right-handed

or left-handed, lay it down flat with the side of the cutter up which is intended to face the driving cone of the machine. Then if the cutter must revolve in the direction in which the hands of a watch move, it is *right-handed;* when it must revolve in a direction opposite to that in which the hands of a watch move, it is *left-handed.*

CONSTRUCTION OF CUTTERS.

PLAIN MILLING CUTTERS.

33. Slitting Saw.—A **plain milling cutter** may be defined as one intended for machining surfaces parallel to the axis of rotation of the cutter. The simplest form of a plain milling cutter is the **slitting saw** shown in Fig. 2. This saw is clamped between washers to an arbor; a number of cutting edges are formed on its periphery by serrating it. These cutting edges are ground after hardening so that they all are exactly the same distance from the axis, in order that each cutting edge will do the same amount of work. Slitting cutters, like the one shown, are ground with clearance on the sides; that is, they are made slightly thinner at the center than at the periphery, so that deep slots can be cut, or stock can be cut off, without having the sides of the cutter bind in the slot.

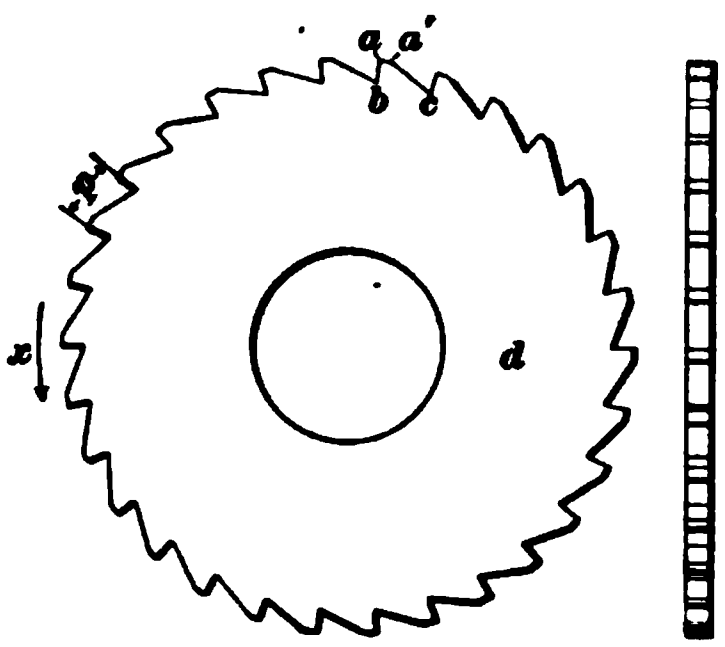

FIG. 2.

34. Screw Slotting Cutter. — When shallow slots are to be cut, as, for instance, the slots in screw heads, the cutter is made with teeth having a much finer pitch; the sides are then usually left parallel, in order to save expense in making the cutter. This kind of a cutter is given the

name of **screw slotting cutter,** since it is most frequently used for that purpose. While used by some for cutting off stock, it is not as well adapted for this purpose as the slitting cutter, since on thick stock the sides of the cutter, especially if the teeth are at all dull, will bind in the stock being sawed.

35. Parts of the Cutter.—The term **pitch,** when applied to the teeth of a milling cutter, refers to the distance between adjacent cutting edges. Since in milling cutters the teeth are equally spaced, the pitch can be found by dividing the circumference of the cutter by the number of teeth. The plane represented by the line *a b* is called the **front face** of the tooth. In American practice, it is almost invariably made radial; that is, the front face lies on a plane that passes through the axis of the cutter. In side milling cutters, this rule is occasionally departed from for the purpose of throwing the chips in a certain direction. The surface *a a'*, Fig. 2, is called the **top face** of the tooth; the angle included between *a b* and *a a'* varies from 85° to 87°, thus giving a clearance of from 3° to 5°. The edge *a* is the **cutting edge,** and the surface whose edge is *a' c* is the back of the tooth. The cutter, in order to cut, must rotate so that the front faces of the teeth move *toward* the work, or in the direction of the arrow *x*.

36. Reversible Cutters.—Any milling cutter that is reversible, i. e., which can be placed with either side toward the spindle, as is the case with most milling cutters fastened to an arbor, will serve for a right-handed cutter or a left-handed cutter, depending on which side of the cutter is placed toward the spindle. Thus, if the cutter illustrated in Fig. 2 is placed with the side *d* toward the spindle, it is a left-handed cutter; but if the side *d* is placed away from the spindle, it is a right-handed cutter.

37. Straight and Helical Cutting Edges.—By making the slitting cutter wider, it becomes the **plain cutter** shown in Fig. 3 (*a*). It seems to be the common

practice to limit the terms "slitting" and "slotting" cutters to cutters that are narrower than one-quarter inch; when wider, they are usually called **plain cutters, cylindrical cutters,** or **parallel cutters.** The cutter shown in Fig. 3 (*a*) has straight cutting edges, by which is meant that they lie in planes passing through the axis. A milling cutter with straight cutting edges will answer very well for surfaces that are relatively narrow, say not over 1 inch wide; it also has the advantage that straight cutting edges

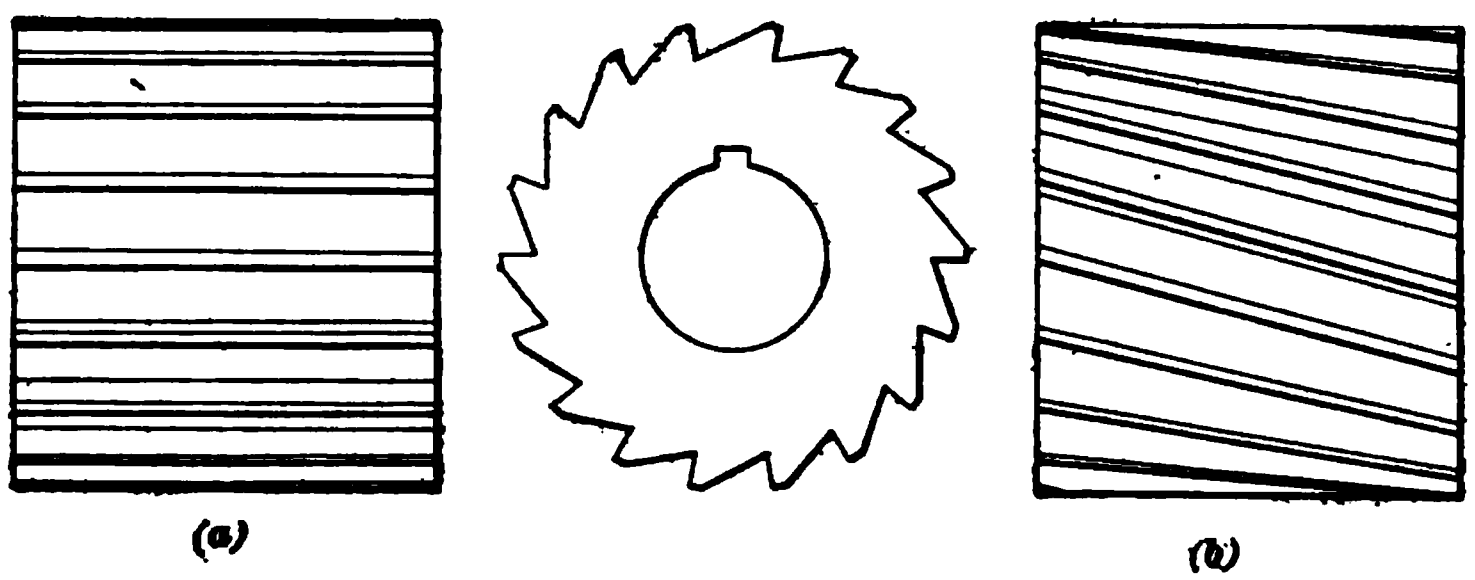

FIG. 8.

are cheaply produced. On the other hand, each cutting edge, when in contact with the work, will cut at once across the whole width of the surface operated on; consequently, considerable power will be needed, and as each cutting edge strikes throughout the whole width of the surface, a distinct blow is struck by it, which will set up vibrations and prevent, to a large extent, smooth, even milling, unless the machine is exceptionally rigid and the work held very securely.

38. The objections to the straight-tooth cutter have led to the design of cutters with helical cutting edges; such a cutter is shown in Fig. 3 (*b*). When a surface is being machined, the teeth will commence cutting at one corner, and the cut will gradually proceed across the surface. In consequence of this shaving action, the severity of the blow struck by each cutting edge on engaging the work is greatly lessened; experience has also shown that for equal conditions, less power will be required for a cutter with helical

cutting edges than for one with straight cutting edges. The lessening of the severity of the blow struck by each edge on engaging the work means a reduction of vibration, and, hence, under equal conditions, the cutter with helical cutting edges will produce a smoother surface.

39. Definitions of Helix and Spiral. — It is to be regretted that it has become the practice among some writers, and hence among many mechanics, to use the terms *helix* and *spiral* as synonymous, i. e., as having the same meaning.

In geometry, a **helix** is a line generated by the rotation of a point around an axis, the point remaining at the same distance from the axis but advancing in the direction of its length. The most familiar examples of helixes are screw threads and the grooves of twist drills.

A **spiral** is a line generated by the progressive rotation of a point around an axis, the point gradually increasing its distance from the axis. When the point rotates in a plane, its path is called a **plane spiral.** The most familiar example of a plane spiral is a watch spring, where all convolutions lie in the same plane.

When a point rotates around an axis at a continually increasing distance from the axis, and at the same time moves in the direction of the axis, in other words, if the point follows the surface of a cone, its path is a **conical spiral.** Probably the most familiar examples of a conical spiral are conical bed springs, and the springs used for seating the water valves in many designs of steam pumps.

40. From the definition it will be seen that a helix is a particular form of a spiral, and that a spiral becomes a helix when the path of the point generating it lies on the surface of a cylinder. In this Course the terms helix and spiral will be used in their true meaning; that is, in accordance with the definitions just given.

41. Nicked Teeth.—Experience has shown that the power required to drive a milling cutter can be greatly reduced by nicking the teeth of helical milling cutters in

the manner shown in Fig. 4, where the nicks are so arranged that a cutting edge will be behind a nick. With such a cutter, the chips are broken up; that is, instead of one continuous shaving, a number of separate shavings are made by each cutting edge. Since it has been shown by experience that less power is required for a nicked cutter, it follows that with the same amount of power available and under equal conditions, a much wider and deeper cut can be

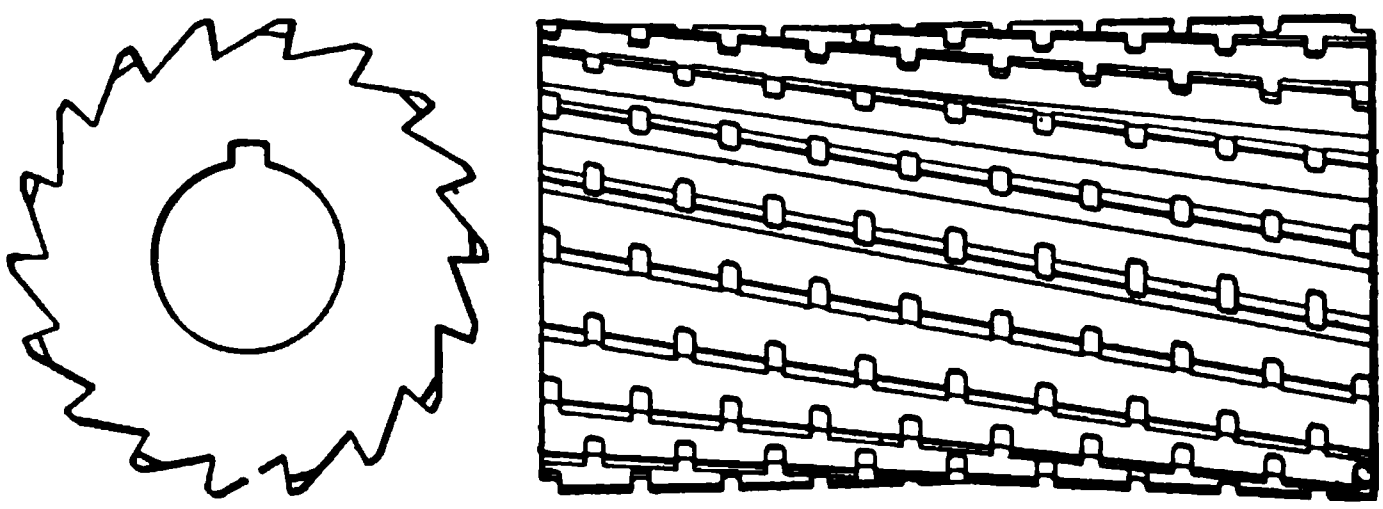

FIG. 4.

taken than is possible with an ordinary helical cutter. For this reason, cutters with nicked teeth are now very generally employed for heavy milling where the rapid removal of superfluous metal is the prime requisite. It is claimed that a surface cannot be machined as smooth with a nicked cutter as with a plain cutter; but if the nicked cutter is carefully made and kept sharp, there seems to be no reason, however, why it cannot produce as good work on a finishing cut as a plain cutter.

42. Built-Up Plain Cutters.—The cutters shown in Figs. 2, 3, and 4 are *solid cutters*, which means that they are made from a single piece of steel. Solid cutters can be obtained as large as 8 inches in diameter and 6 inches wide; this size is about their commercial limit. When larger cutters are wanted, they are usually made with blades or teeth of tool steel that are inserted in a body of inexpensive material in such a manner that they can be removed and replaced when worn or broken. There are a great many different ways in which such cutters may be made.

43. Fig. 5 shows the construction adopted by the Morse Twist Drill and Machine Company for cutters of the inserted-blade type. Referring to the illustration, it will be seen that the blades *a*, *a* are inserted in rectangular slots cut into the body *b*. A clamp *d* is placed between each alternate pair of blades; this clamp can be drawn inwards by

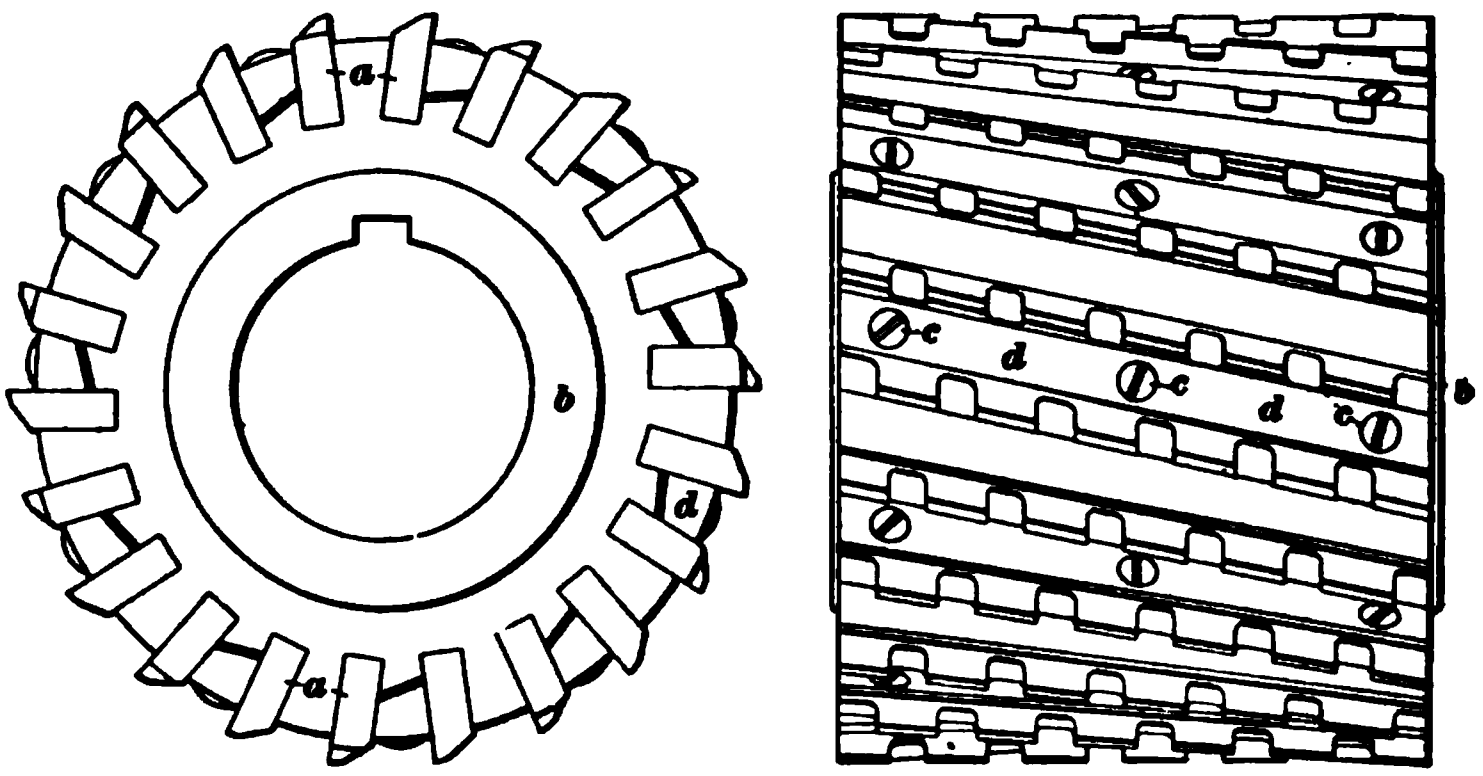

FIG. 5.

setting up the screws *c*, *c*, which operation presses the two blades against opposite sides of their slots and locks them. The blades themselves are straight, but their cutting edges are helical, in order that the front face of the blades may be radial throughout their length. The cutter here shown is intended for heavy work, and, hence, the cutting edges are nicked.

44. An entirely different design of a plain milling cutter is shown in Fig. 6. This cutter belongs to the inserted-tooth type, and is a logical development of the idea of nicking the teeth, inasmuch as each separate tooth is the equivalent of the cutting edge between a pair of nicks of an inserted-blade cutter. The cutter consists of a cast-iron body *a* in which rows of cylindrical holes are drilled and reamed for the reception of the teeth. The holes are so arranged that a line drawn through the centers of the holes of each row and along the cylindrical surface of the cutter

forms a helix. The teeth *b*, *b* are cylindrical plugs of tool steel that are simply driven into the holes. A cutting edge is formed by cutting away one-half of that part of the plug that projects from the body, and grinding a proper clearance on its top. It will be observed that while the rows of teeth are in the direction of a helix, the cutting edge of each

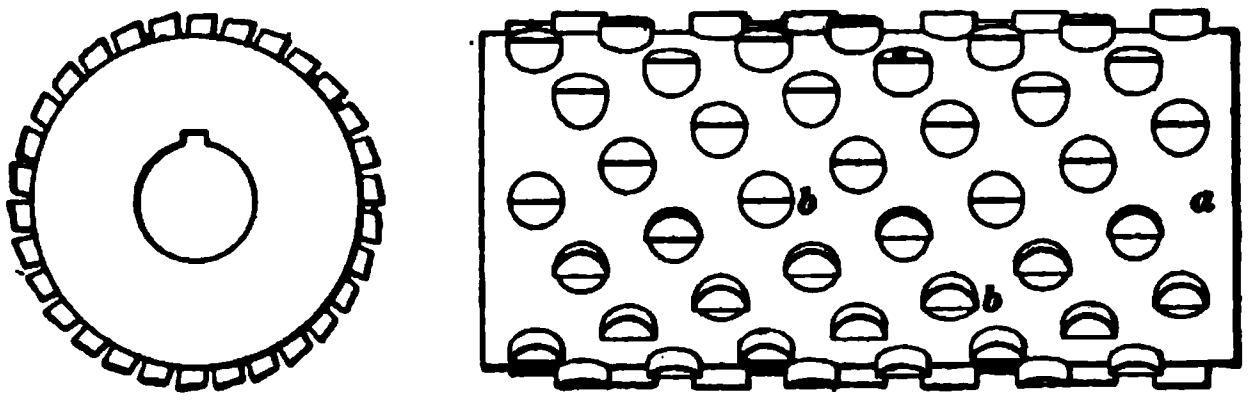

FIG. 6.

tooth is in a plane passing through the axis of the milling cutter. This is done purposely in order to prevent the teeth from turning around their own axis under the pressure of the cutting operation. If the front face of the tooth is helical, it will commence to cut at one corner; in consequence of this, there will be a tendency to rotate the tooth around its own axis.

45. Inserted-blade and inserted-tooth milling cutters are limited as to size only by the capacity of the machine. In connection with this it is to be observed that as far as results are concerned, the solid cutter will accomplish the same thing. For large cutters, however, either the cost of the solid cutter is such as to be prohibitive, or it is impossible to obtain steel of sufficient size to make a solid cutter. Furthermore, in hardening very large pieces of tool steel, there is considerable danger of losing them by cracking when they are quenched. It is thus seen that the question of whether to use a solid or an inserted-tooth cutter is simply a question of expense, since neither will produce work that cannot be done as well with the other. When it comes to a question of maintenance, the inserted-blade

and inserted-tooth cutter is undoubtedly cheaper in the long run, since new blades or teeth can be fitted at a fraction of the expense of a solid cutter, at least as far as large cutters are concerned.

SIDE MILLING CUTTERS.

46. Solid Side Mill.—The most common form of a side milling cutter for small work is shown in Fig. 7. By examining the illustration, it will be seen that it is a face milling cutter with additional teeth cut on its sides. In order that the sides may clear the work, they are recessed below the bottom of the teeth, as shown at *a*.

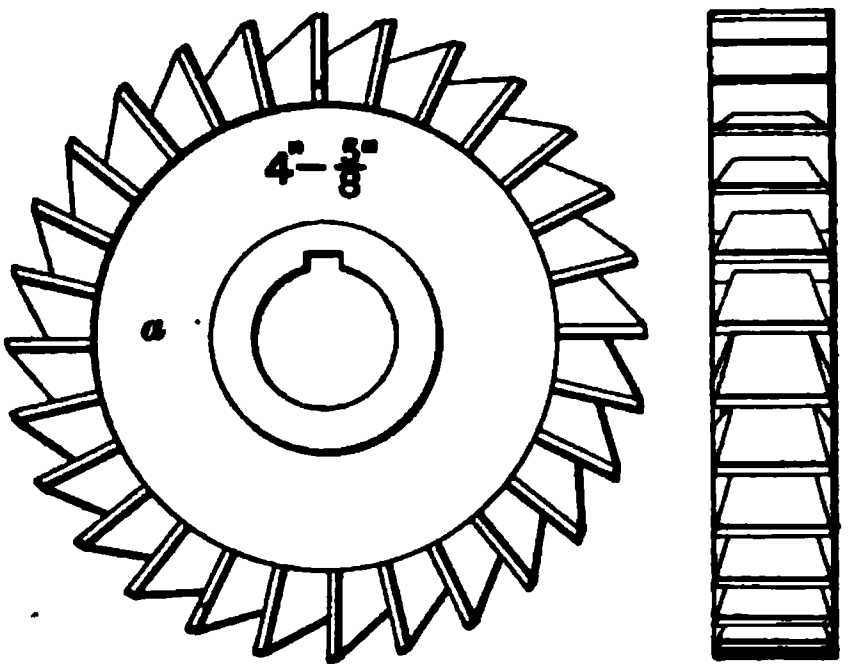

FIG. 7.

A side milling cutter may operate on the sides of work either by cutting with the cutting edges formed on its periphery or by cutting with the teeth formed on its sides, depending on which way the work is fed to the cutter. When the work is fed in a direction at right angles to the axis of rotation of the cutter, the teeth on the periphery will do the cutting and the side teeth will drag against the work; when the feeding is done in a direction parallel to the axis of rotation, the side teeth will do all the cutting.

47. Straddle and Gang Mills.—Two side milling cutters like the one shown in Art. **46** are often placed on an arbor, with a washer to regulate the distance between them. In this case two opposite sides of the work are operated on at once; such a combination is called a **straddle mill.**

A **gang mill** consists of two or more cutters assembled together on the same arbor. It may be made up entirely

of plain cutters or of a combination of plain and angular or side cutters. Gang mills are very useful for milling some simple shapes, if plain cutters of the required diameter are available, since several surfaces may be operated on at the same time. For intricate shapes, special milling cutters are often made as gang mills.

48. Threaded Cutters.—When any milling cutter is attached by screwing it to a shank or to the spindle, it is absolutely necessary to revolve the cutter in such a direction that the cutting operation will tend to lock it more firmly. From this it follows that any cutter attached by screwing is *not* reversible. For instance, consider a plain side milling cutter that is attached by a left-handed thread. Then, this cutter must only be attached so that it will run left-handed. Assume that it is run right-handed. Then, as soon as the cutter engages the work, the pressure of the cutting operation will tend to unscrew the cutter; in case the cutter is actually unscrewed, the work may be spoiled by the cutter digging into it, or the cutter may be broken. Particular attention is called to this fact, since a large percentage of the accidents to the work and cutters is due to its not having been taken into account. The foregoing may be summed up as follows:

If the thread is left-handed, the cutter must run left-handed; for a right-handed thread, the cutter must run right-handed.

49. It has been explained in Art. **32** what is meant by a right-handed and left-handed cutter; it will be well to refer again to this article, to make sure that the meaning of these terms when applied to milling cutters is properly understood.

50. Inserted-Blade Side Mills.—Small side milling cutters, say up to 8 inches in diameter, are usually made solid. Above that size the difficulty of making a solid cutter makes cutters with inserted blades or inserted teeth cheaper in first cost and maintenance. Inserted-blade side

milling cutters may be constructed in a great variety of ways; for instance, they may be made on the same principle as the plain milling cutter shown in Fig. 5, or the blades may be inserted and locked in the manner shown in Fig. 8. This figure shows the design adopted by the Pratt & Whitney Company. The blades *a*, *a* fit rectangular slots cut

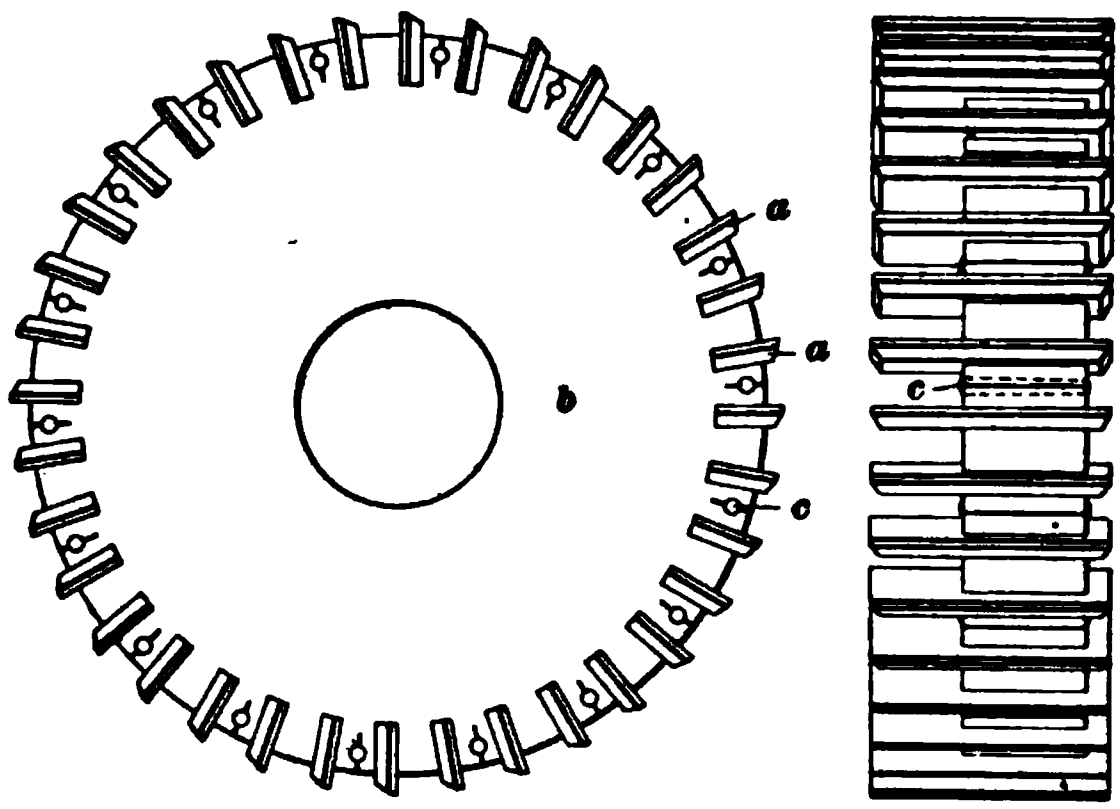

FIG. 8.

into the body *b*. A hole is drilled between every alternate pair of blades; these holes are reamed out tapering, to receive the taper locking pins *c*, *c*. After reaming, slots are cut through the reamed holes; the blades are then locked by driving the taper pins home. The blades are generally made long enough to allow them to be sharpened a great number of times.

51. Inserted-Tooth Side Mills.—The designs shown in Figs. 5 and 8 are used for cutters from 8 to 36 inches in diameter. Cutters exceeding the latter size are usually made with inserted teeth, although relatively small cutters are occasionally made that way on account of low first cost. There are various ways in which teeth may be inserted in side milling cutters. Probably the cheapest construction is to insert cylindrical teeth in the periphery of a cast-iron body, as shown in Fig. 9. The teeth *a*, *a* have their ends formed like planer roughing tools; the holes in

which they are placed are drilled at an angle of about 60° to the axis, in order that the cutting edges of the teeth may come in front of the side of the body. The teeth are held by setscrews *b*, *b*; owing to their simple shape, they can be made quite cheaply, and can be easily replaced.

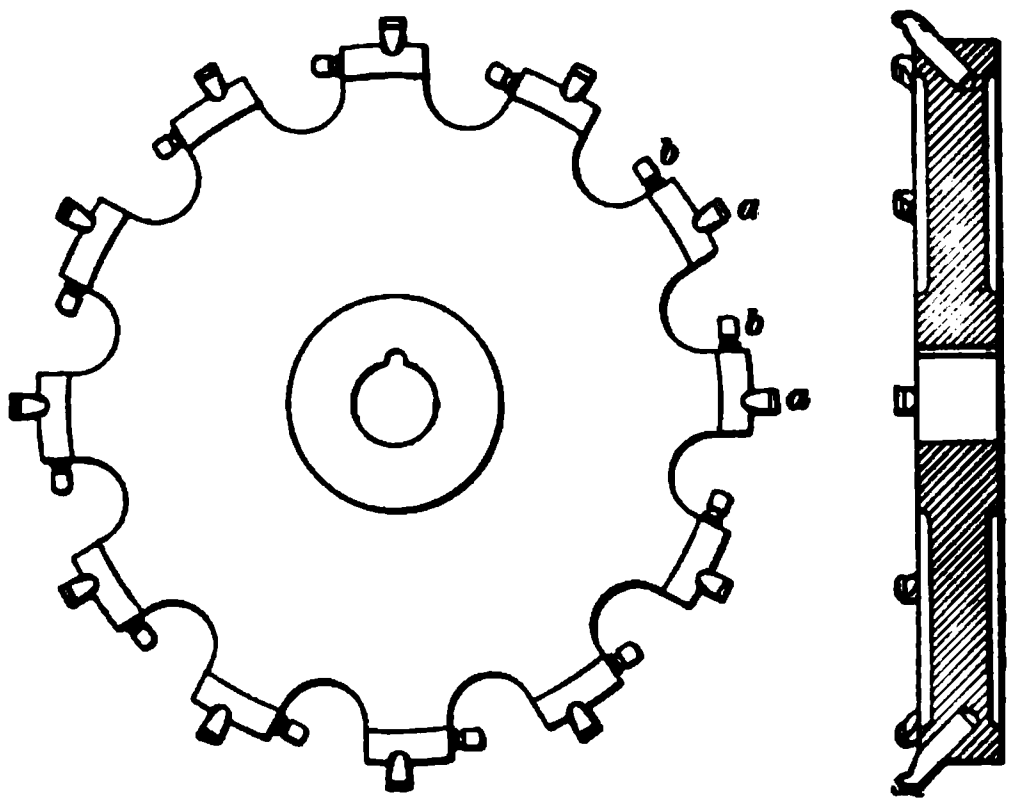

FIG. 9.

52. Fig. 10 shows a radically different construction. The teeth *a* are made of square tool steel and are placed in rectangular slots in the body *c*; these slots are parallel to the axis of the cutter. The teeth are held by setscrews *e*, *e*. The particular cutter shown is fastened to the spindle *d* by a key *f*; longitudinal movement on the spindle is prevented by a screw *g*, which is placed half into the shaft and half into the body. This method of fastening a cutter to the spindle is adapted only to cases where the cutter body is not intended to be replaced by others of different shape or size.

53. The particular design of cutter shown is a fine example of how, by the use of a properly designed tool, a surface may be roughed out and finished by running the cutter over it but once. Referring to the illustration, two flat-nosed tools *b*, *b* are seen so placed that their outer corner is slightly inside of the circle passing through the teeth. The cutting edges of these two tools are

adjusted in a plane slightly in front of that in which the cutting edges of the teeth are placed. In consequence of this, the teeth will rough out the work in advance of

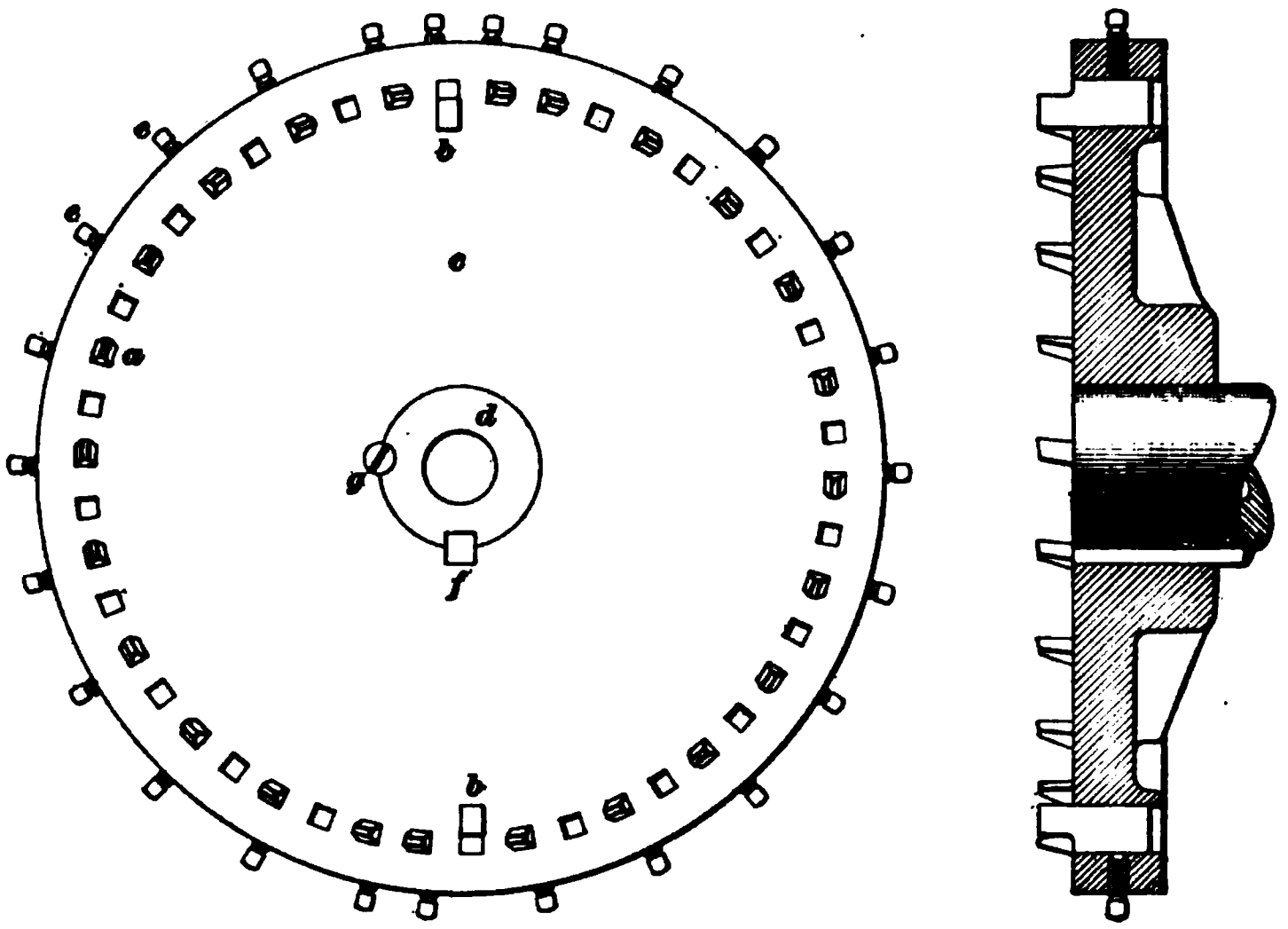

FIG. 10.

the tools *b*, and as the cutter moves past the work, the tools follow directly behind the teeth and take the finishing cut. This greatly reduces the time required for the cutting operation.

54. Cutters designed to take a roughing and a finishing cut at the same time are only applicable to work which is so rigid that there is no danger of its springing to an appreciable extent by the releasing of the tension existing at the surface of castings and forgings. Plain milling cutters cannot very readily be designed to take a roughing and a finishing cut at the same time.

55. Slotting Cutter.—The T-slot cutter shown in Fig. 11 is a combination of a side milling cutter and a face milling cutter, and is intended for cutting out T slots. This style of cutter is usually made solid, and has a shank *a* which is tapered to fit the hole of the milling-machine spindle.

The end of the shank is milled to form a tang that enters a corresponding recess in the bottom of the hole in the spindle, in order that the cutter may be positively driven.

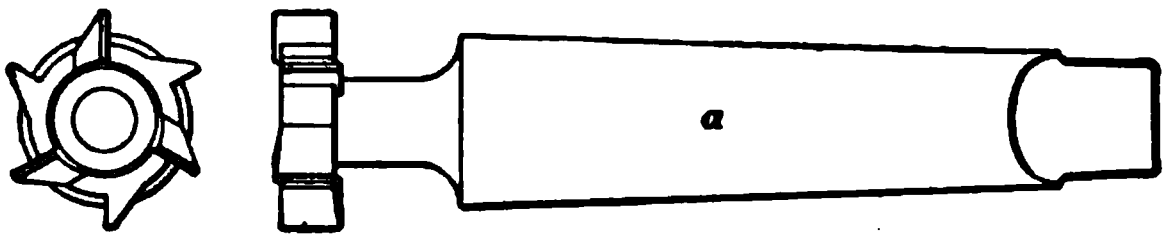

FIG. 11.

All shank cutters must be driven home quite heavily, using a lead hammer for this purpose; if this is not done, the vibrations due to the cutting operation will soon loosen the cutter and, in consequence, it will dig into the work.

ANGULAR MILLING CUTTERS.

56. Classification.—An **angular milling cutter** may be defined as a cutter intended for the finishing of surfaces at an angle other than 90° to the axis of rotation. Angular cutters may be constructed in a great variety of ways and may be solid, or have inserted teeth, or inserted blades. They may be attached to the spindle by clamping them to an arbor, by screwing them to a shank, or by screwing them to the spindle. They may also be made solid and with a shank that is either tapered to fit the spindle or that is cylindrical; in the latter case, the shank is held in a chuck. Angular cutters may be divided into two general classes, which are *single-angle* and *double-angle* cutters.

57. Single-Angle Cutters.—A single-angle cutter is one in which one cutting face is at an inclination other than a right angle to the axis of rotation. Such cutters are known according to the angle included between the inclined face and a plane perpendicular to the axis, as 30° cutters, 45° cutters, etc. Angular cutters of the single-angle class are largely used for cutting the teeth of milling cutters, counterbores, hollow mills, and similar work having straight cutting edges.

58. A single-angle 60° cutter is shown in Fig. 12. As shown in the illustration, it has teeth cut on its side, as well as on the angular face. Such a cutter can operate on two surfaces at the same time; that is, it can cut on a surface perpendicular to the axis of rotation and also on a surface at an inclination to it. Single-angle cutters intended only for finishing a surface at an inclination to the axis are made without teeth on the side; such a cutter is considerably cheaper than the one shown in Fig. 12.

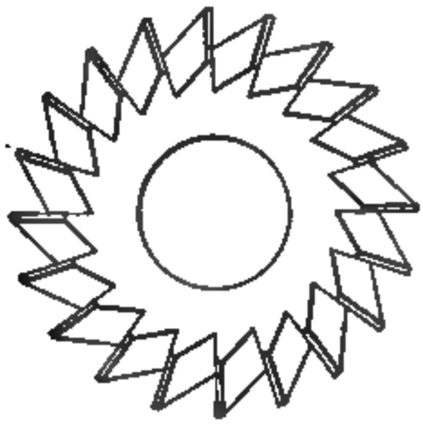

FIG. 12.

59. Double-Angle Cutters.—A double-angle cutter has two cutting faces each at an angle other than 90° with the axis. When both faces make the *same* angle with the axis, the cutter is designated by giving the angle included between the two cutting faces. For instance, if the angle is 60°, the cutter would be called a "60° double-angle cutter."

60. When the two cutting faces do not make the same angle with the axis, as, for instance, in the cutter shown in Fig. 13, the cutter is designated by giving the angle included between each face and a plane perpendicular to the axis, as the angles *a* and *b* in the figure. For instance, if the angle *a* is 12° and the angle *b* 48°, the cutter would be designated as a "12° and 48° double-angle cutter."

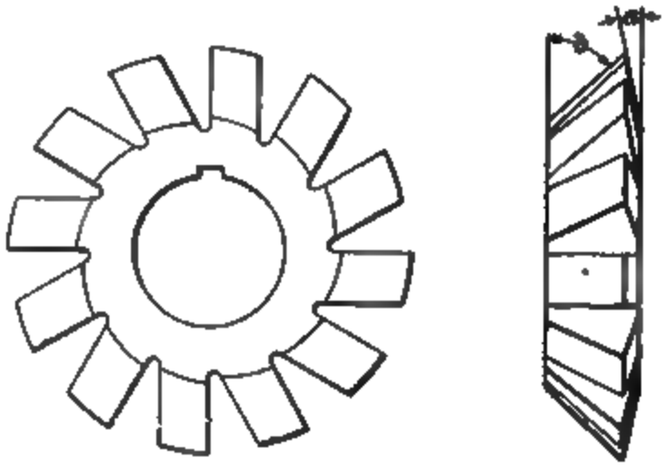

FIG. 13.

Double-angle cutters are most commonly used for fluting taps, reamers, milling cutters with helical teeth, and similar work where it is important that the two surfaces operated on at the same time be finished equally well.

61. It must not be inferred that a surface at an angle to another one cannot be finished except with an angular cutter. In many cases, the work may be chucked in such a manner that a plain milling cutter or a side milling cutter may be used, and in other cases, the axis of rotation of the cutter is adjustable, which allows a plain cutter or side mill to be used for angular cuts.

END MILLING CUTTERS.

62. Stem Mills.—In its true sense, an end milling cutter is one in which the cutting is done by the teeth on its end. In practice, however, the term is usually applied to shank cutters, often called **stem mills,** which have teeth on the periphery as well as on the end, as, for instance, the cutter shown in Fig. 14. By examining the cutter illustrated, it will be seen that it is a combination of a plain milling cutter and a side milling cutter, and can be used for

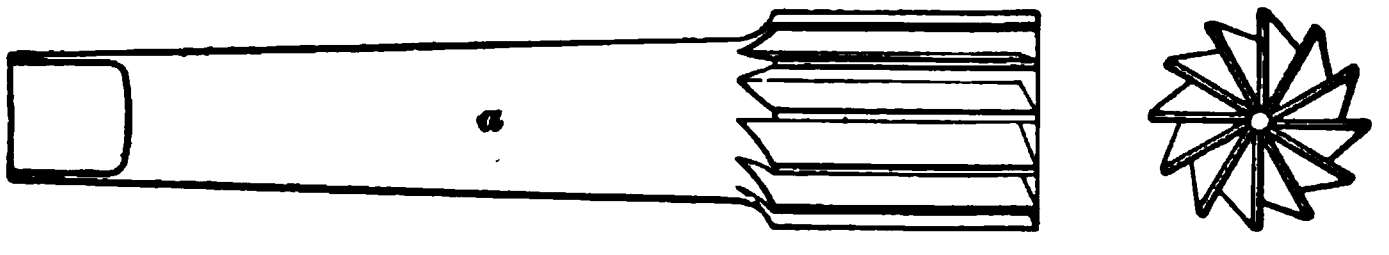

FIG. 14.

milling surfaces that are parallel, and also for surfaces perpendicular, to the axis of the cutter. When the work is fed to the cutter in a direction parallel to the axis of the latter, the teeth on the end will do the cutting, and the cutter will act as a true end mill. In most cases, however, the work is fed in a direction perpendicular to the axis of the cutter, and the cutter will operate in the same manner as a side mill. The larger sizes of end mills are made as shell mills; that is, they are in the form of a shell that is fastened to an arbor.

Smaller sizes are made with a taper shank *a*, as shown in Fig. 14, and are driven into a tapering hole in the milling-machine spindle. The smallest sizes are made with a cylindrical shank, or **stem,** and are held in a self-centering chuck. While the end mill shown in Fig. 14 has straight cutting edges, it is often made with helical edges on the periphery. The teeth on the end are almost invariably radial.

63. Cotter Mill.—Fig. 15 shows a peculiarly shaped mill that is usually considered as an end mill, although it is not very well adapted for cutting with its end. This mill is known as a **cotter mill,** and is in reality a face cutter with two teeth opposite each other. It is particularly adapted

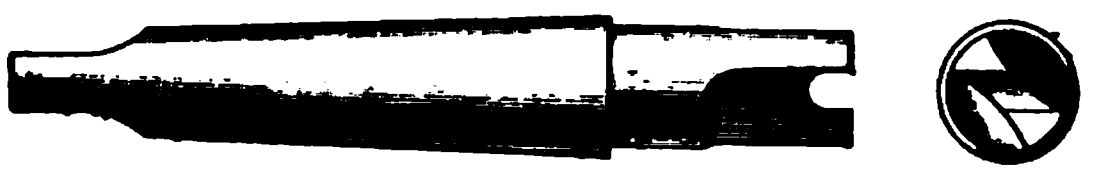

FIG. 15.

for cutting narrow and deep grooves; it cannot be sunk endwise into solid metal to any extent, but a hole must be drilled where the groove is to start. The cutting is done by the edges on the periphery. As there is considerable room for the chips, the cutter will not clog very easily.

FORM MILLING CUTTERS.

64. Classification.—Any milling cutter intended for the milling of surfaces that are not plain surfaces may be called a **form milling cutter.** Such cutters may be divided into two general classes, viz.: *form cutters* and *formed cutters.* Both classes will accomplish the same result; they differ from each other only in their construction.

The name **form cutter** is usually applied to any form milling cutter that has the teeth constructed in the same manner as the ordinary milling cutter. Form cutters can rarely be sharpened without changing their profile to some extent.

Formed cutters are milling cutters that have been made with a forming tool applied in such a manner that the sharpening of the teeth will not change the profile.

Form milling cutters may have any one of an infinite variety of profiles and may be made solid or several cutters may be combined into a gang mill.

65. Fly Cutter.—The simplest form milling cutter is the so-called **fly cutter,** which is shown in its arbor in Fig. 16. The cutter *a* is set into a rectangular slot in the arbor *b*, and is locked by tightening the two setscrews *c*, *c*. The front face is radial; one end of the cutter is filed or turned to the profile it is desired to cut. It is seen that the fly cutter is simply a one-tooth milling cutter. Clearance is given by setting the cutter farther out from the center than the position in which it was turned. The fly cutter has the

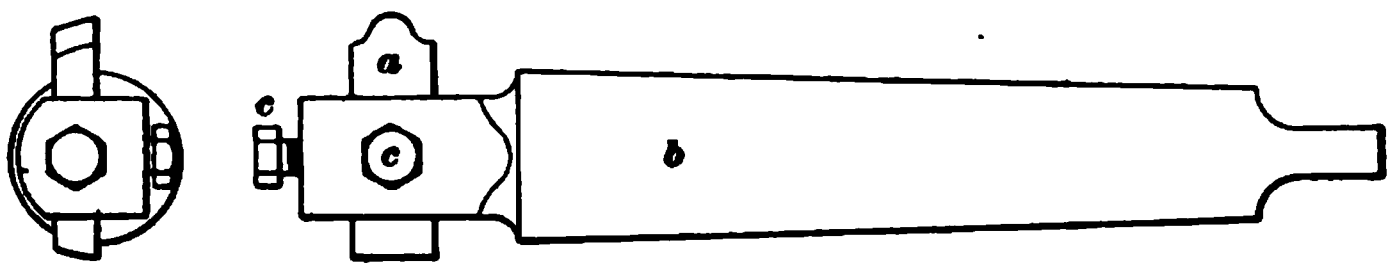

FIG. 16.

advantage of being very cheap in first cost, even when the profile is quite intricate; for this reason it is well adapted for such work as the making of forming tools for screw machines, making a gear with an odd pitch of teeth, and similar work that does not warrant the expense of a regular form cutter. Since the cutter has only one cutting edge, it cannot be expected to last as well or cut as fast as a regular cutter; it will reproduce its own shape very exactly, however, and will mill quite smoothly if kept sharp.

66. Interlocking of Teeth.—Fig. 17 shows a form cutter that is built up of three pieces, thus forming a gang cutter. In order that the cutter will not make a mark where the pieces join, the teeth are made to interlock, as shown at *a*, *a*. By examining the cutter, the similarity of its

teeth to those of the ordinary milling cutter will be noticed. The difficulty of sharpening the teeth without changing the profile of the cutter is apparent.

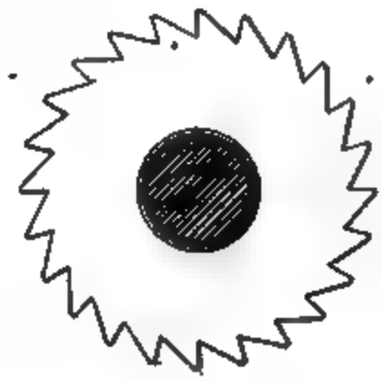

FIG. 17.

67. Gear-Tooth Cutter.—The most familiar formed cutter is the gear milling cutter shown in Fig. 18, which is used for cutting the teeth of gear-wheels. This cutter, as are all formed cutters, is sharpened by grinding the front face of the teeth. If the precaution of grinding the front

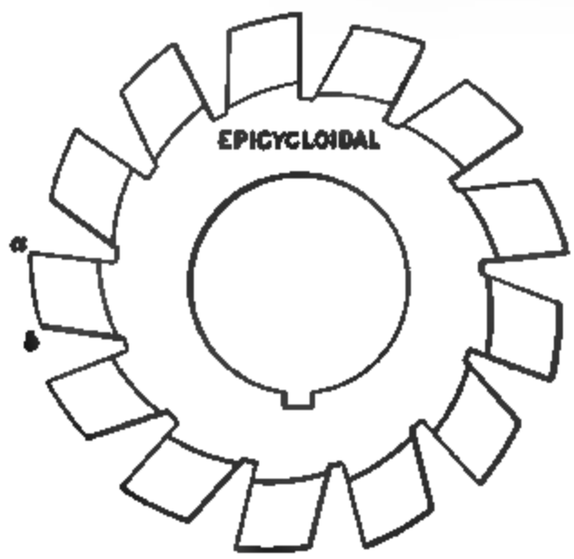

FIG. 18.

faces radially is observed, the profile will not change at all, since the method by which it is made insures that the profile of all sections taken through a tooth in planes passing through the axis is exactly the same. The tooth *a b*, Fig. 18, of a formed cutter may be conceived to be built

up of an infinite number of thin wedge-shaped plates with radial faces, each of which is placed slightly nearer the axis of the cutter than the one in front of it. In this manner, the back of the tooth is made to clear the front, which forms the cutting edge. Sharpening the tooth may be likened to the removal of one or more of the plates of which the real tooth was conceived to be composed, thus leaving plates that have not worn in readiness to cut.

68. Formed Gang Cutters.—Formed cutters may be made for an endless variety of profiles; Fig. 19 will serve as a suggestion of what can be done. In many cases, formed cutters may be combined with ordinary cutters or

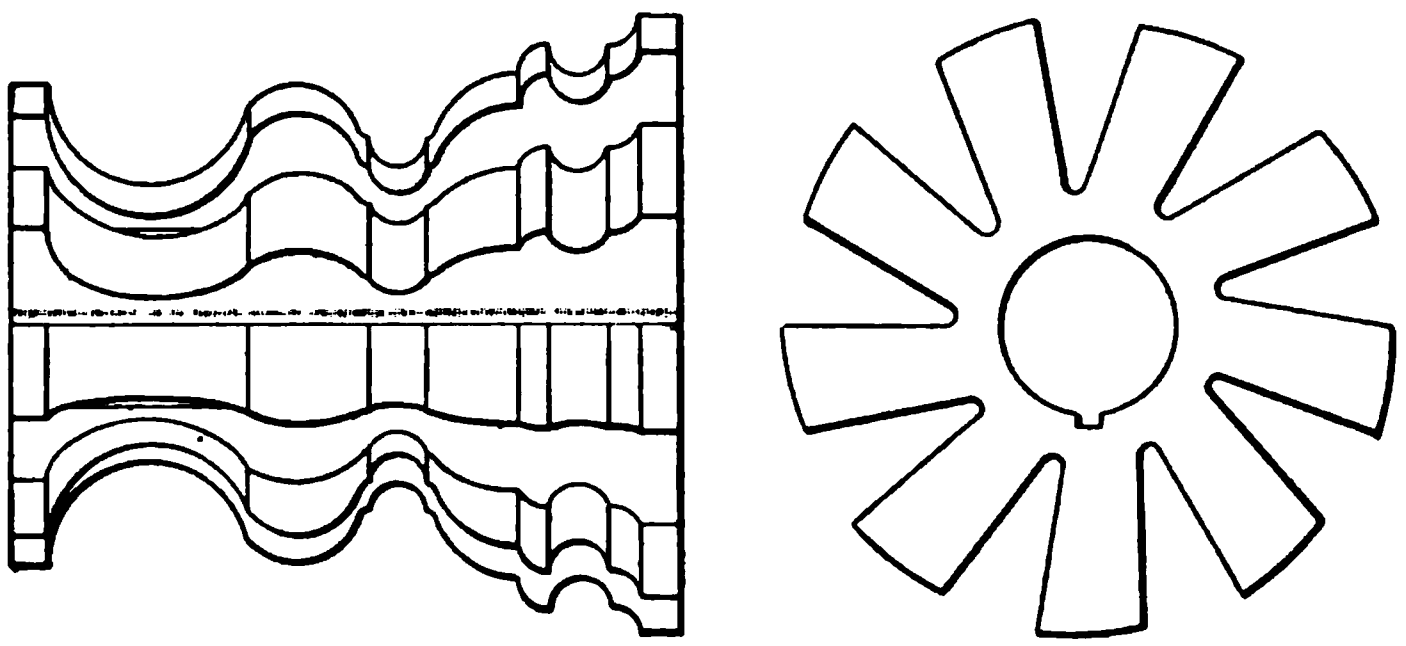

FIG. 19.

with form cutters; the several cutters when assembled together will form a gang mill. Formed cutters cannot be made without a special forming machine or device; for this reason they are usually bought of manufacturers that make a specialty of them.

69. In practice, a vast variety of milling-machine cutters will be found that at first will appear unlike any that have been illustrated here. When they are analyzed, however, they will invariably be found to belong to one of the several classes enumerated; in many cases the distinctive features of several classes may be combined in a cutter.

CARE OF MILLING CUTTERS.

KEEPING CUTTERS SHARP.

70. In order that a milling cutter may work to the best advantage, it is absolutely essential that it be kept *sharp*, and that all cutting edges be at the same distance from the *axis of rotation* of the cutter. It is not sufficient that the cutting edges be at the same distance from the axis of the cutter, for if a true cutter is mounted on an arbor that is eccentric, i. e., runs out of true, the cutting edges will *not* be at the same distance from the axis of rotation. In consequence of this, some edges will have to do more work than others; experience has shown that if this is the case, the cutter can neither be pushed to the full limit of its capacity nor can it produce as smooth work as one ground true in respect to its axis of rotation. This fact is becoming more generally realized, as evidenced by the increasing practice of grinding cutters while in place in the milling machine.

EFFECT OF DULLNESS.

71. Milling cutters cannot be ground true enough by hand to allow the machines to be worked to the best advantage. A cutter-grinding machine is an essential adjunct of the milling machine, and without it the milling machine is at a serious disadvantage. A dull cutter is distinctly a bad cutter; it should never be used in that condition, but should be sharpened as soon as it shows signs of becoming dull. A dull cutter will do poor work, will require more power to drive it, and will wear out faster than one that is kept sharp. The extra power required to drive a dull cutter is transformed by friction into heat; this heat tends to soften the cutting edges and thus tends to make them wear faster. In formed cutters there is, in addition, a wearing of the formed surfaces that will shorten the life of a cutter more than many sharpenings.

72. As an example of what work can be done by a cutter that is kept sharp, the Brown & Sharpe Manufacturing Company state that the worn-out gear-cutter shown in Fig. 20, which is 3½ inches in diameter, has cut 467 cast-iron gears, having a face 3 inches wide, with 64 teeth of 4 diametral pitch. This makes a total length of cut of 7,472 feet. The teeth were cut from the solid blank and finished in one cut. This performance, while good, is by no means exceptional.

FIG. 20.

HOLDING CUTTERS.

ARBORS.

73. Construction of Arbor.—The ideal method of driving the cutter is to make it a part of the spindle, and this is done to some extent in milling machines designed especially for side milling. In milling machines intended for general work, the cutter must be so made that it can be easily removed, which condition precludes making it a part of the spindle.

74. Cutters are most commonly clamped to an **arbor,** which in turn is fitted to the spindle and forced to rotate with it. A common design of an arbor is shown in Fig. 21. It has a taper shank *a*, which fits a corresponding hole bored in the spindle. The rear end of the shank is flattened to form the tang *f*, which enters a corresponding slot at the bottom of the tapered hole in the spindle, and which

is expected to drive the arbor in a positive manner. The part of the arbor that projects from the spindle is made cylindrical; a nut is placed on the end of the arbor for the purpose of clamping the cutter, which is placed between

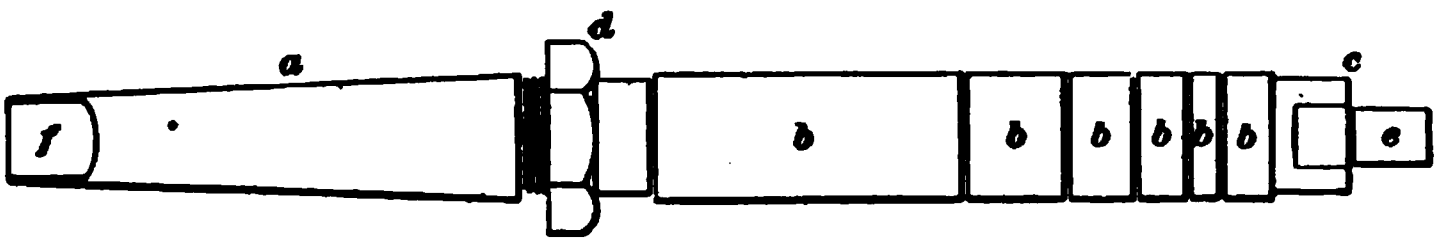

FIG. 21.

removable washers, as *b*, *b*. These washers are made of different lengths in order to accommodate different widths of cutters, and also to allow the cutter to be placed in different positions along the arbor without the necessity of having a very large number of washers.

75. Methods of Removing Arbors.—The particular design of arbor shown is provided with a nut directly in front of the shank. This nut when screwed against the front end of the spindle will cause the arbor to be withdrawn from the spindle. More commonly, however, the arbor is loosened by driving a tapered key behind the shank; in some cases the spindle is made hollow and the arbor is then punched out with a rod.

76. Supporting Arbors.—The front end of the arbor usually has a countersunk center to allow a dead center to be used for supporting it. Occasionally, a cylindrical teat *e*, Fig. 21, is formed at the front end; this teat is fitted to a bushing held in the outboard bearing and serves to support the arbor. When the machine has no outboard bearing, the cutter should invariably be placed just as close to the spindle as circumstances permit, since an arbor is comparatively slender and will spring considerably even under a moderate cut. When no way of steadying the end of the arbor is available, then in cases where the cutter must be placed near the end, the finishing must be done by light cuts in order to keep the spring of the arbor within reasonable limits.

77. Driving the Cutter.—In many cases the cutter is driven simply by the friction between the sides of the washers and the sides of the cutter; this friction is created by screwing up the nut on the end of the arbor. When the cutter slips in spite of repeated tightening, it may often be made to hold by placing washers made from ordinary writing paper between the metallic washers and the cutter. Thin brass or copper washers will also be found useful for this purpose.

For heavy cutting, the cutter should be driven by a key; a good many arbors have a semicircular groove cut along the cylindrical part to take a round key, which may be made by cutting off a piece of drill rod to the right length. A corresponding semicircular keyway is cut in the bore of the cutters. In some cases, the driving is done by a regular rectangular feather; the arbor is then splined.

78. Precautions to be Taken With Arbors.—When the end of the arbor is supported either by a bushing or by a dead center, there is no chance for the arbor to become loose in the spindle, provided the supports are properly adjusted. When the end of the arbor is free, however, it must be driven home in the spindle quite hard, or it will come loose under the vibrations due to the cutting operation. Before inserting the arbor, the hole in the spindle should be thoroughly cleaned of any chips that may have gotten into it, and it should also be free from grease or oil. The shank of the arbor must then be cleaned off just as carefully, and inserted so that the tang enters the corresponding slot in the spindle. It should be driven home by a fair, quick blow with a heavy lead hammer. In nine cases out of ten, the coming loose of the arbor, which is here assumed to have been properly fitted, is due to oil or grease on the shank and in the spindle. Hence, if the arbor persists in coming loose, again clean the shank and spindle thoroughly. In some cases, the shoulders of the tang may strike the bottom of the hole in the spindle; this can easily be discovered by examining the tang. If they do, the arbor

cannot be driven home properly, in which case the tang should be ground off where it *bottoms*. Chips or dirt between the collars may bow the arbor and cause it to run out.

79. Arbors of the form shown in Fig. 21 are made with right-hand and left-hand nuts, and the cutter used on the arbor should always have a direction of rotation to suit the direction of the thread. That is, select a cutter that runs in such a direction that when slipping occurs, the tendency will be to *tighten* the nut. Hence, for a left-hand thread on the arbor, the cutter should be left-handed. If the thread is right-handed, use a cutter that must run right-handed.

80. Shell-Mill Arbor.—Small side mills and end mills are often so made as to be held in a manner similar to that in which a shell reamer is held; the shell-mill arbor shown in Fig. 22 (*a*) is then used. This arbor has a taper shank to fit either the milling-machine spindle or a collet fitted to

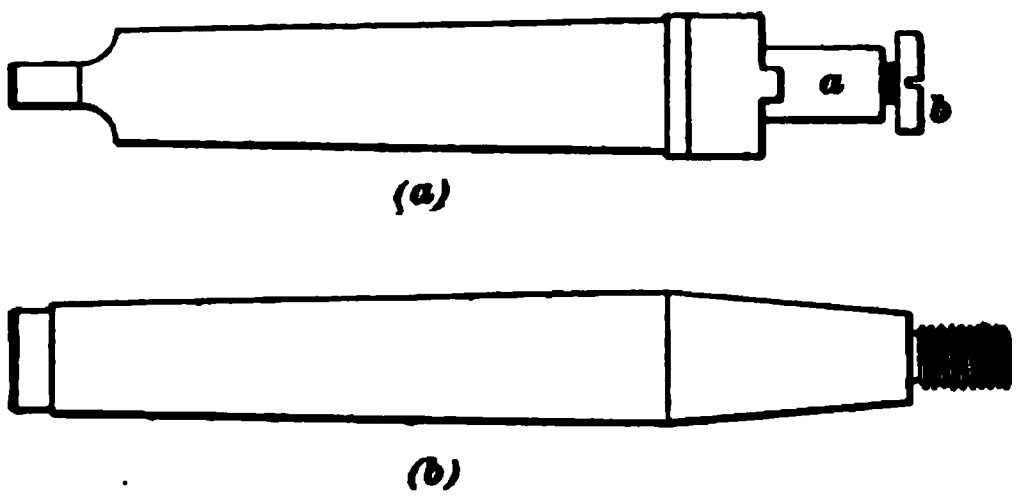

FIG. 22.

the spindle. The shoulder at the end of the cylindrical part *a*, which forms the seat for the cutter, has two projections that enter corresponding slots in the cutter and insure positive driving. The cutter is confined lengthwise by the head of the screw *b*, which enters a recess in the cutter, thus bringing the head below the face of the cutter; this is necessary for end milling and some kinds of side milling.

81. Screw Arbor.—Small cutters are often made with a threaded hole and are screwed to a screw arbor made as shown in Fig. 22 (*b*). The direction of rotation of the

cutter that can be used with a shell-mill arbor and screw arbor is determined by the direction of the thread of the screw *b*, Fig. 22 (*a*), or the screw at the end of the screw arbor. That is, for a left-handed thread use a left-handed cutter; for a right-handed thread use a right-handed cutter.

82. Effect of Vibration.—While it is admitted that in an arbor driving a cutter by positive means, as by a key, or by projections on the shoulder, there is no danger of the nut unscrewing by a slipping of the cutter, experience has shown that the vibrations due to the cutting operation tend to unscrew the nut, or the screw *b*, Fig. 22 (*a*), unless its thread is in accordance with the statement made in Art. **81.** If no cutter having the proper direction of rotation is available, the nut or screw must be screwed home as firmly as circumstances will permit, and the chance of the cutter working loose must be taken.

Shell-mill arbors and screw arbors are liable to become loose for the same reasons as the ordinary arbor; the same precautions should be used that were explained in Art. **78.**

83. Arbor for Use Between Centers.—Fig. 23 shows how a milling arbor may be made if the cutter is to be driven between centers, as occurs when a lathe is temporarily converted into a milling machine. The arbor is

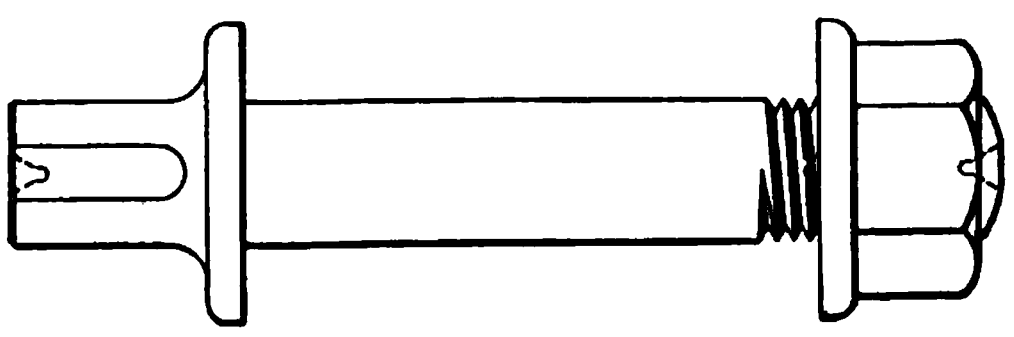

FIG. 23.

driven by a dog, the tail of which engages with the face plate. Such an arbor may occasionally be used for a regular milling machine having an outboard bearing; a live center must then be placed in the milling-machine spindle and suitable arrangements made for driving the arbor.

COLLETS.

84. Plain Collet.—A **collet** is a socket used for bushing down the hole in the milling-machine spindle so that smaller arbors or shanks can be held. Fig. 24 (*a*) shows how such collets are usually made. The outside fits the milling-machine spindle; the inside is bored out true with

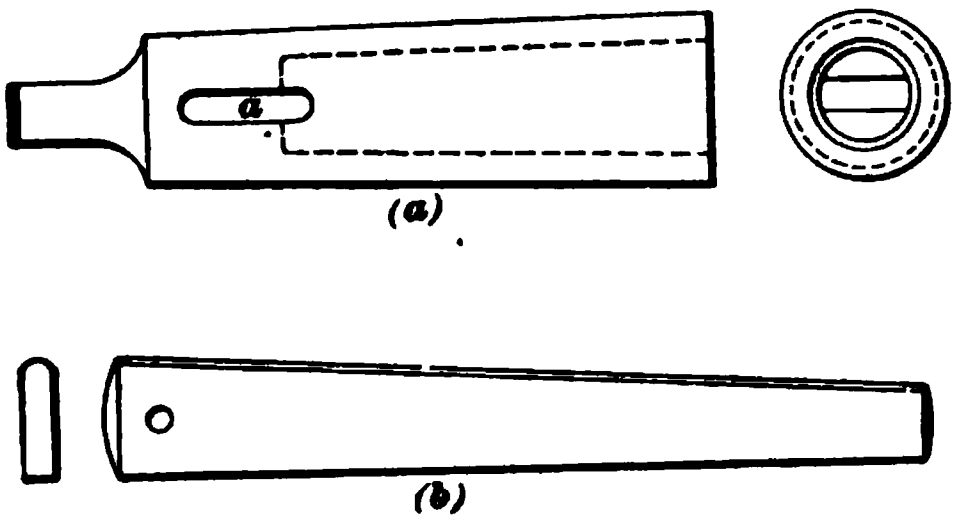

FIG. 24.

the outside, so that an arbor inserted in the collet will run true when the collet is in the machine. The tang of the arbor or of the cutter shank projects into the slot *a*; the arbor can be removed from the collet by driving a taper key into the slot behind the tang.

85. With constant use, a collet will enlarge somewhat inside, so that the shank of the arbor or cutter will finally bottom. A thin piece of writing paper may then be wrapped around the shank; the paper must not be so wide as to lap, however. While this is a makeshift at best, it is one that will often prove very handy. The same thing may be done when the cutter shank or arbor does not bottom in the hole, but has its tang projecting so far into the slot *a* that it will not be possible to get a key in to drive the shank out after it is driven home. The key is usually made as shown in Fig. 24 (*b*); a hole is drilled near the large end so that a chain can be attached to it and to some stationary part of the machine. This insures finding the key when it is wanted.

86. Chuck Collet.—Small cutters are often made with a cylindrical shank, and very small cutters are made from drill rod. Such cutters may be held by means of the **chuck collet** shown in Fig. 25. The front end of the collet is bored out cylindrically, and so that the axis of the cylindrical hole coincides with the axis of the shank *a*. A nut *b* having a plain tapered part is fitted to the front end, which latter has been split into three parts. By reason of the front end being tapered on the outside, the screwing up of the nut *b* will close the split part on the shank of the cutter, thus holding it centrally and firmly.

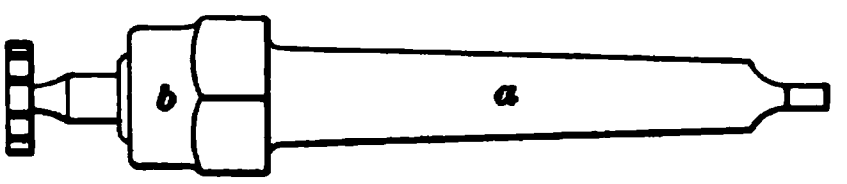

FIG. 25.

87. The chuck collet shown is open to one objection, which is that all cutters to be used with it must have the same diameter of shank. If a chuck collet is intended to take straight shanks of varying diameter, a high grade drill chuck of the Almond or Beach type may be attached to a shank fitting the milling-machine spindle.

CHUCKS AND FACE PLATES.

88. Self-centering lathe chucks may often be fitted to the spindle for holding cutters having larger shanks than the drill chuck will receive. For some work a single-tooth cutter may be mounted in a slot of a face plate fitted to the spindle. Such a construction does not differ essentially from that of a fly cutter, being simply a fly cutter on a larger scale. A cutter attached to a face plate will be found of great service in finishing a surface to a circular profile having a given radius. While this can be done to the best advantage with a regular milling cutter made especially to the required radius, the fact remains that in many cases the expense of making such a cutter is not

warranted by the conditions, and a face-plate cutter will then prove an excellent inexpensive substitute.

89. Fig. 26 shows the general idea of a face-plate cutter; its similarity to the fly cutter will be apparent. Referring to the figure, the face plate *a* is seen to be threaded so as to screw on the spindle. The cutter *c* is adjustable in

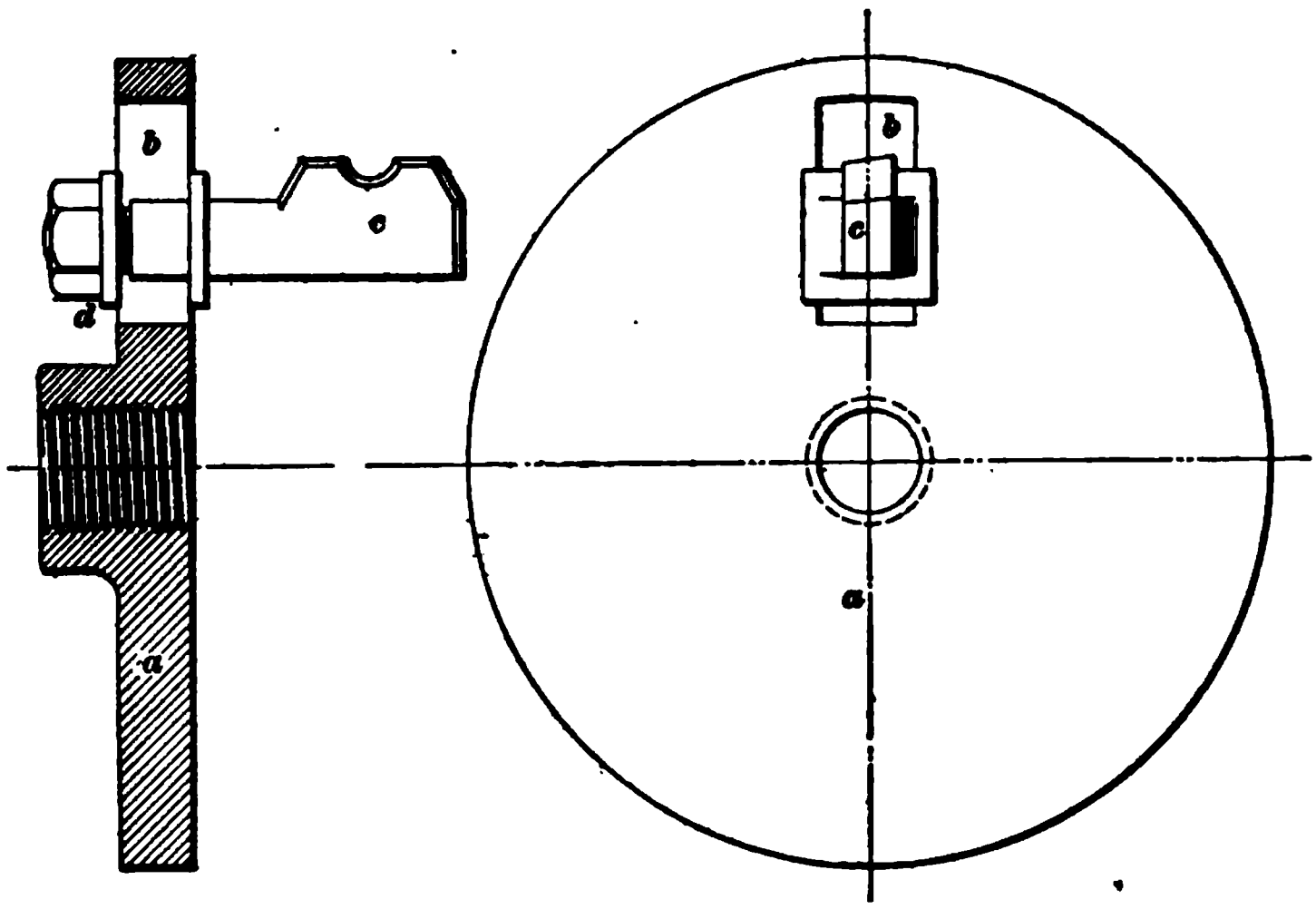

FIG. 26.

the slot *b*, and can be clamped by tightening the nut *d*. The shank of the cutter should have a rectangular cross-section so that the cutter will not turn in the slot.

90. If a circular milling cutter of the right profile, but of smaller diameter, is available, the expense of making a single-tooth cutter can often be saved by clamping the regular cutter to the face plate, passing the clamping bolt through the slot in the face plate. The cutter is then placed with one of its cutting edges in the position occupied by the cutting edge of the fly cutter shown in the illustration, and after adjusting it to the required radius, it is clamped. Any ordinary bolt may be used for clamping. The setting of the cutter so as to mill a given radius is not

a particularly difficult matter. The cutting edge must be set at a distance from the periphery equal to the difference in the required radius and the radius of the face plate. When the cutter projects considerably from the face of the face plate, the blade of a try square may be placed on the cutting edge and the stock held against the face plate; the distance from the edge of the blade to the periphery may then be measured with a steel rule.

When a regular milling cutter is used as a fly cutter, it is advisable to drive a dowel-pin into the face plate in such a position that it will come between two teeth, and thus prevent rotation under the pressure of the cutting operation.

PREPARATION OF STOCK.

91. The term **stock,** when used in connection with a milling operation, refers to the work in its rough condition. The success of the milling operation depends to a large extent on the condition in which the stock reaches the milling machine. If the stock is hard, either in spots or all over, as is the case with unannealed tool steel and often with forgings, or if the stock has a hard skin, as is usually the case with iron castings and steel castings, the hardness will cause the cutter to dull rapidly, which prevents the machine being worked to the best advantage.

92. In some cases, the stock is as soft as it can be rendered; no further preparation is then feasible or necessary. In other cases, the stock can readily be softened and thus be put into a better condition for milling. The softening may consist of a removal of hard scale by pickling and rattling, or uniform softening by annealing, or maybe a combination of these methods.

93. Iron and steel castings, when they leave the mold, usually have a hard, glossy skin, or **scale,** as it is called, in which sand is frequently embedded. This scale, when the size of the casting allows it, can be pretty thoroughly

removed by rattling the castings in a foundry *rattler*, or *tumbler*, as some call it. Castings of a size and shape that prohibit tumbling may have the scale softened so that it will crumble easily by **pickling.** This is done by placing the castings for from 10 to 15 minutes into an acid bath composed of 1 part of sulphuric acid to 25 parts of boiling water. After pickling, the castings must be thoroughly washed in clean boiling water in order to remove all traces of the acid, which would cause them to rust very rapidly. A hard scale is often found on forgings. This may also be removed by rattling or pickling.

94. When castings or forgings are found too hard to mill easily, even after the scale has been removed, they may be annealed by heating them very slowly to a dull-red heat, and allowing them to cool gradually. The annealing will have the further advantage of releasing, to a large extent, the internal stresses that have been set up in forging or casting. This reduces the extent to which the shape of the work will change after machining.

CUTTING SPEEDS AND FEEDS.

CUTTING SPEEDS.

95. Owing to the large variety of work that may be done by milling, no hard and fast rules in regard to proper cutting speed and feed per tooth can be given as applicable to all cases. When much work of the same kind is to be done, it is well to experiment a little, starting in with a feed and speed that judgment indicates to be conservative, and varying both gradually until the maximum production at the minimum expense per piece has been obtained.

96. The cutting speed depends on several factors, one of which is the character of the material to be milled, i. e., its resistance to being severed by the milling cutter. It

may be stated as a general rule that the harder the material the slower the cutting speed must be. Thus, unannealed tool steel calls for a low cutting speed, while soft brass castings can be advantageously milled at a much higher speed. In order to aid the milling-machine operator in judging about where to commence to experiment, the average cutting speeds for different materials are here given.

A peripheral (surface) speed of 15 feet per minute can rarely be exceeded in unannealed tool steel. If well annealed, the speed may be increased to 25 feet per minute. Wrought iron, soft machinery steel, and hard white-iron castings can be successfully machined at a speed of from 30 to 40 feet per minute. Medium-hard iron castings, phosphor bronze, tobin bronze, aluminum bronze, and similar very tough copper alloys may stand a cutting speed of 50 feet per minute, which can be increased to 60 feet for common, soft gray-iron castings, soft steel castings, and malleable-iron castings. Red-brass castings, more commonly but wrongly designated as gun-metal castings, will stand a cutting speed of 80 feet per minute; this can be easily increased to 100 feet for yellow brass.

97. Another factor that enters into the selection of a proper cutting speed is the presence or absence of provision for carrying away the heat generated in the cutting operation. This heat may be carried away by flooding the work and cutter with oil or soda water during the milling operation; when this is done while a sharp cutter is used, the cutting speed may be as much as 50 per cent. in excess of that possible in dry milling.

98. A sharp cutter will easily stand a higher cutting speed than a dull one; in this respect a milling cutter is analogous to a lathe tool. It may be stated that the duller the cutter the more heat will be generated per revolution; hence in order to give a chance for this heat to dissipate into the work and surrounding atmosphere so that the cutting edges will not become overheated, the revolutions per minute must be lowered.

FEEDS.

99. The rate of feed depends on the pitch of the teeth, the provision made for clearing out the chips, the rigidity of the work and machine, the manner in which the work is held, and the degree of finish desired.

When milling cutters were first made, they were constructed with teeth having a very fine pitch. Experience quickly showed that the chips would clog up the spaces between the teeth, packing in so closely that the cutter would refuse to cut at all except when a very fine feed was employed. Such cutters, instead of cutting, really nibbled away little crumbs of metal, as it might be expressed for want of a better term. It became gradually understood that by making the pitch of the teeth coarser, a distinct chip could be taken, whose size, so far as the cutter was concerned, was limited only by the size of the space between the teeth and the provision made for clearing out this space. From this the conclusion may be drawn that, other conditions permitting, the rate of feed per tooth can be greater as the pitch of the teeth is made larger. The rate of feed obviously must never be so large as to break the tooth.

100. The rigidity of the work, that is, its resistance to a change of form under the pressure of the cutting operation, exercises a powerful influence over the rate of feed. Therefore, if the work will spring easily, a fine feed must be employed; when it is very rigid the feed can be increased up to the limit. Likewise, if the work is substantially held, a coarser feed is permissible than when it is lightly held.

As stated in Art. **99,** the permissible feed is influenced largely by the space available between the teeth for the reception of the chip. Evidently, this space can be filled either by a heavy and short chip or a fine and long chip of equal volume. From this the conclusion may be drawn that for a shallow roughing cut the feed may be coarse, and that increasing the depth of the cut requires a decrease of the feed.

101. The degree of finish desired largely influences the choice of feed. As a general rule, it may be stated that for roughing out, a relatively low cutting speed and a heavy feed will be found advantageous, while for finishing, a higher cutting speed and fine feed are needed. The only exception is in the case of side milling with inserted-tooth or inserted-blade cutters. Here a wide, flat-nosed cutting edge can be used, and, consequently, a very wide feed is permissible.

Another point that must be taken into consideration when experimenting for a proper feed and cutting speed for a particular job, is the difficulty of resetting some forms of gang cutters after sharpening so that they will cut exactly the same shape as before. In such cases, it will occasionally prove more economical to use a slower speed and lighter feed in order to make the cutter last longer and thus save the time required for resetting it after it has been sharpened.

102. The peripheral speed (the cutting speed) of a milling cutter can readily be found in feet per minute by multiplying its diameter, in inches, by 3.1416 and by the number of revolutions per minute, and dividing the product by 12. The revolutions per minute can be obtained by using a speed indicator, which is an instrument made for this purpose.

EXAMPLE.—A cutter 3 inches in diameter makes 120 revolutions per minute. What is its cutting speed in feet per minute?

SOLUTION.—Applying the rule given in Art. **102**, we get

$$\frac{3 \times 3.1416 \times 120}{12} = 94.25 \text{ feet. Ans.}$$

103. Tables I and II were calculated by Mr. C. C. Stutz and first published in "Machinery." These tables are very useful for finding the cutting speeds of milling cutters when the diameter of the cutter and the number of revolutions per minute are known. Likewise, if a cutting speed has been selected and the diameter of the cutter is known, the number of revolutions it must make per minute

can be taken directly from the table. These tables are applicable to lathe work as well, by considering the diameter of the work instead of the diameter of the milling cutter.

104. Suppose the diameter of the cutter (or work) is given, and a cutting speed has been selected. To find the corresponding number of revolutions, look in the first line at the top for the nearest diameter. Follow down the column headed by the diameter until a cutting speed nearest to the one selected is found. In the first column at the left will be found the corresponding number of revolutions per minute.

105. When the revolutions per minute and the diameter of the cutter (or work) are known, to find the corresponding cutting speed, look in the first column at the left for the nearest number of revolutions. Follow this line to the right until the column headed by the diameter is reached. In this column and on the same line with the number of revolutions, the corresponding cutting speed will be found.

TABLE 1.

CUTTING SPEEDS IN FEET PER MINUTE.

TABLE II.

CUTTING SPEEDS IN FEET PER MINUTE.

DIAMETER.

Rev. per Min.	1'			
	12	13	14	15
.5	....	....	...	....
.6	..	. ..	.	..
.7	...	....	.. .	....
.8	..	.	. .	....
.9	....	. .	....	. .
1.	.	.	.	. ..
1.2	....		...	....
1.4	. .	...	.	. ..
1.6	....	...	...	. ..
1.8	.	.. .	..	....
2.	. ..	....	...	....
2.25	. .	.	....	....
2.5	. .	....	...	9.81
2.75	....	. .	10.08	10.80
3.	...	10.21	10.99	11.78
3.5	10.5	11.91	12.83	13.74
4.	12.57	13.61	14.10	15.70
4.5	14.14	15.31	16.49	17.67
5.	15.71	17.02	18.33	19.63
5.5	17.28	18.72	20.16	21.60
6.	18.85	20.42	21.99	23.56
6.5	20.42	22.12	23.82	25.52
7	21.94	23.82	25.66	27.49
7.5	23.56	25.53	27.49	29.45
8.	25.13	27.23	29.32	31.41
8.5	26.70	28.93	31.15	33.38
9.	28.28	30.63	32.99	35.34
9.5	29.85	32.33	34.82	37.30
10	31.42	34.03	36.65	39.26
11	34.56	37.44	40.32	43.19
12	37.70	40.84	43.98	47.12
13	40.84	44.24	47.65	51.04
14	43.98	47.65	51.31	54.97
15	47.03	51.05	54.98	58.90
16	50.17	54.45	58.64	62.82
17	53.31	57.86	62.31	66.75
18	56.45	61.26	65.97	70.68
19	59.59	64.85	69.64	74.60
20	62.73	68.27	73.30	78.53

MILLING-MACHINE WORK.

(PART 2.)

OPERATION OF MILLING MACHINES.

LUBRICATION.

1. Purpose of Lubrication.—An ample lubrication of a milling cutter during the cutting operation not only decreases the friction and thus lessens the heating of the work and cutter, but also carries the heat away to an extent depending on the character, volume, and method of application of the lubricant employed.

The carrying away of the heat is probably the chief benefit derived from an ample application of a lubricant, experience having shown that keeping the cutting edges cool largely prevents them from becoming dull. A proper application of the lubricant will also quite effectively prevent the chips from filling up the spaces between the teeth of the cutter, and will consequently permit an increase in the rate of feed.

2. Materials Requiring Lubrication.—Experience has shown that no lubrication is required for milling ordinary gray cast-iron and yellow-brass castings. For milling wrought iron, steel, steel castings, malleable-iron castings, hard cast iron, bronze, copper, and the various tough copper alloys, lubrication of some sort is usually either necessary or advisable.

For notice of copyright, see page immediately following the title page.

LUBRICANTS.

3. The lubricant generally used for milling cutters is either some oil or a mixture of some oil with soda water and other ingredients. While oil alone is probably the best lubricant, it is also the most expensive; for this reason, it is rarely used for any other than small, fine milling, where ample provision may be made for catching most of the surplus oil and the chips. A cheap mixture of oil with other ingredients is usually preferred for cases where the surplus oil cannot readily be saved.

4. Pure lard oil is by many conceded to be the best lubricant for milling cutters, since it has sufficient body to make it adhere well, and, furthermore, it thickens very slowly from age and use. Its only drawback is the comparatively high first cost. Some of the so-called fish oils are considerably cheaper than a good grade of lard oil, and are considered by some to be fair substitutes. If most of the drippings and chips are caught, the oil may be separated by some form of oil separator, of which a number are in the market, in which case a high-priced lard oil will often prove the cheapest in the long run, since its superior lubricating qualities enable more work to be done.

METHODS OF LUBRICATION.

5. Choice of Method.—The choice of a method of applying a lubricant naturally depends on the service in which the machine is engaged. When only a few pieces are to be milled, an expensive lubricating system is scarcely advisable; when the machine is constantly employed on duplicate work, an elaborate lubricating system will usually pay for itself in a short time by reason of the decrease in cost of maintenance of cutters and increase in production.

The different methods of applying a lubricant to a milling cutter are *by a brush*, *by a gravity feed*, and *by a pump*.

6. By Brush.—The simplest method of lubrication consists of applying the lubricant to the cutter with a brush.

This method is well adapted to delicate work where light cuts are taken. The oil supply being intermittent in this case, it must be frequently renewed, the chips at the same time being cleared out from between the teeth of the cutter. In applying the brush, care must always be taken to so apply it that there is no likelihood of the brush being drawn toward the work by the cutter; that is, apply it to the side of the cutter that runs *away* from the work. A stiff, long-handled, bristle brush is preferable for this work; camel's-hair brushes are too soft for an efficient removal of the chips.

7. By Gravity.—In general, a constant lubrication is preferable to an intermittent one. For this purpose a can or a small tank may be placed at some distance above the cutter; a bent drip pipe with a stop-cock in it may be used for conveying the lubricant to the top of the cutter. The rate of flow is then adjusted by turning the stop-cock. Such a tank is furnished with most milling machines; many machines have the table so designed as to catch all the drippings and chips. The lubricant is then drained off into a suitable receptacle, and after being strained or otherwise purified, it may be used again.

8. When no provision has been made for catching the drippings, a suitable drip pan may be placed under the work. Such a drip pan may easily be made from a piece of sheet tin, bent up to form a box. A piece of brass wire gauze having about 60 meshes to the inch may be soldered to a frame placed into the drip pan, so that the gauze is about 1 inch above the bottom of the pan. This will strain the lubricant automatically to a fairly satisfactory extent; as soon as the drip pan is full, the strainer with the chips is lifted off and the strained lubricant poured into the tank. After the lubricant has been used a number of times, it requires straining in some more efficient manner.

9. By Pumping.—A constant stream of lubricant will not only keep the cutter sharp for a greater length of time, but will also wash the chips out of the cutter. This fact

has gradually become so well recognized that it is becoming quite universally the practice to pump the lubricant on the cutter in a constant stream under a light pressure. As a general rule the pump used is a rotary force pump, which is driven directly from some rotating part of the machine.

10. Fig. 1 shows the arrangement adopted by one manufacturer for a machine intended for fairly heavy milling. In the illustration a rotary pump *a* is shown attached

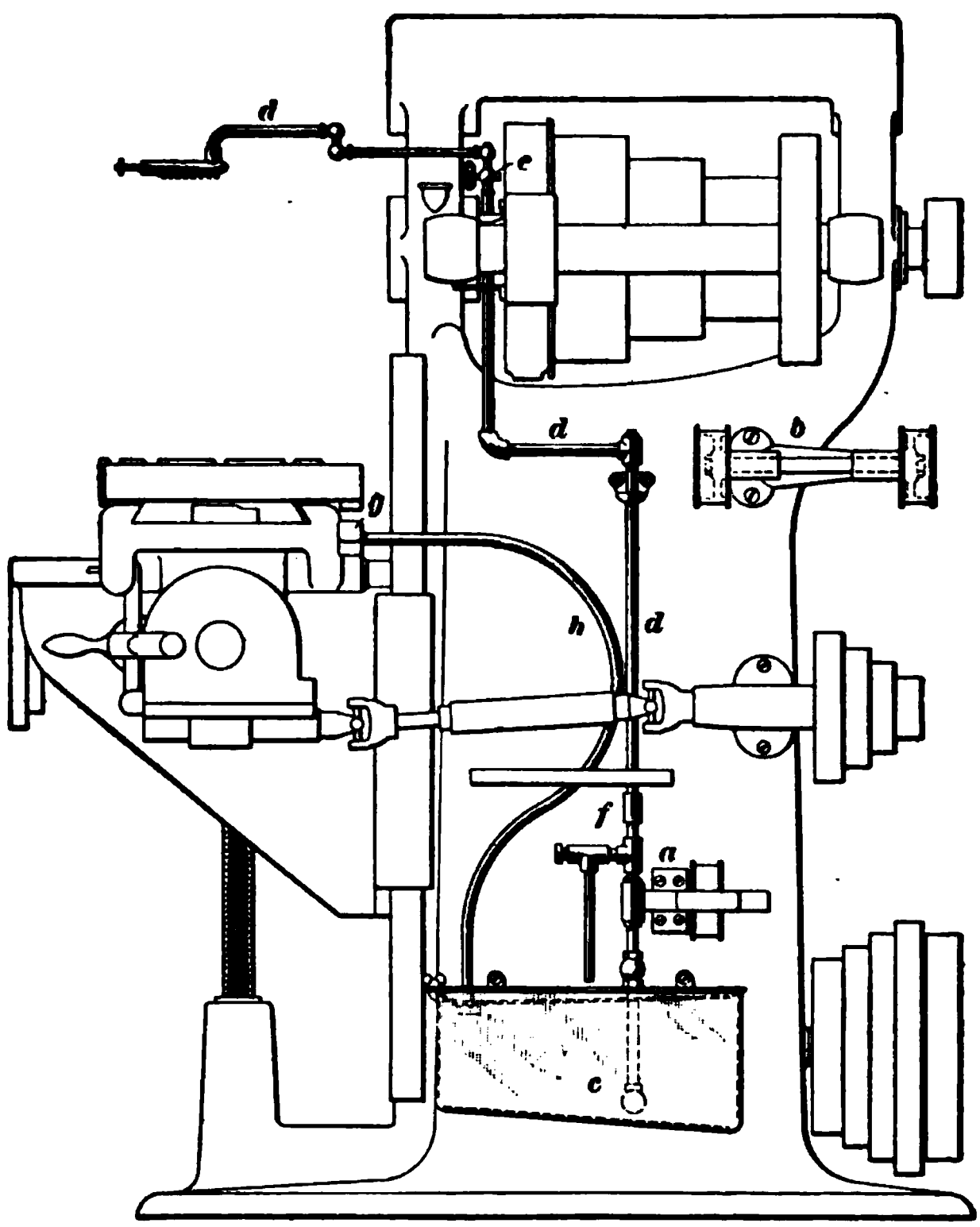

FIG. 1.

to the frame of the machine. This pump is driven by a belt from the countershaft *b*, which is carried by a bracket bolted to the frame. The suction end of the pump connects with the tank *c* holding the lubricant, which is pumped

through the pipe system *d d* and is delivered directly on the cutter. In order to accommodate different sizes and positions of the cutter, the upper part of the piping has swivel joints and, hence, can be arranged to deliver the lubricant where it will be most effective. The quantity of lubricant that is discharged can be regulated by the stop-cock *e*. The pump *a* runs at a constant speed and consequently delivers a constant volume of lubricant. When less than this quantity is used, the rising of the pressure in the pipe system will open the relief valve *f*, and the excess will pass back into the tank. In the machine shown, a gutter extends around the table, from which the lubricant drains into the trough *g*, and then through the flexible tubing *h* back to the tank. It is thus seen that the lubricant is used over and over again; the only lubricant lost is that adhering to the chips, but a large percentage of this can be recovered if a separator is available.

11. When the lubricant is supplied in a constant stream, it is well to discharge it as close to the cutter as circumstances permit, in order to prevent splashing; it should be delivered preferably in such a direction that the issuing stream will tend to wash the chips out of the cutter and away from the cuts.

12. Internally Lubricated Cutter. — The advantages to be derived from a forced system of lubrication so

FIG. 2.

applied as to effectively clear the cutter have led to the design of internally lubricated cutters. Such a cutter, patented by the Newton Machine Tool Works, is shown in

Fig. 2. Referring to the figure, the arbor *a* is seen to have a central hole drilled into it; this hole extends nearly to the plane of the shoulder against which the cutter is clamped. A number of radial holes, as *b*, *b*, are drilled through the arbor, and hence the recess within the cutter *c* is in communication with the central hole of the arbor. A number of holes, as *d*, *d*, are drilled in the clearance spaces through the shell of the cutter. The lubricant is pumped through a tube *e* into the arbor and issues in fine streams through the holes *d*, *d*, thus effectually clearing the cutter of chips and applying the lubricant where it is most needed, that is, directly to the cutting edges. The end of the arbor is tapering, and fits a tapered hole of the stationary bushing *f*, which is placed in the outboard bearing. This construction allows the arbor to revolve, but prevents any escape of the lubricant except through the radial holes in the arbor.

SELECTION OF CUTTER.

CONDITIONS GOVERNING THE CHOICE.

13. The **selection of a cutter** for a job is a matter that depends not only on the nature of the work, but also on the construction of the machine, the attachments to the machine, the rigidity of the work itself, the manner in which it can be or is held, and the cutters that are available. For instance, if a large surface of a rather springy casting is to be finished by milling, it will often be out of the question to use a wide cylindrical plain cutter, because the pressure of the cutting operation, even with a very fine cut, may be sufficient to seriously spring the work. But, if a small end mill is used, it may be possible to make a very satisfactory job of machining the casting.

14. Some machines are so constructed that only side milling cutters can be used, hence the operator has no latitude at all in the choice of a cutter. Other machines have no outboard bearing to support the arbor; it would be a

mistake to select a wide cylindrical plain cutter for finishing a wide plane surface in such a machine, since the spring of the arbor even under a very light cut may be sufficient to condemn the work. In such a case, a side mill or end mill would probably prove satisfactory.

15. When surfaces parallel to the line of motion are to be finished at an angle to each other, it usually becomes a question of attachments, cutters, and type of machine available. For instance, in a plain milling machine it may be possible to do the job only by the use of angular cutters; in a universal milling machine, when the job may be held between centers, it might be done by a cylindrical plain cutter, and so on.

16. When the choice has narrowed down to a certain type of cutter, the question of which kind of the chosen type of cutter will remove the most stock at the least expense often becomes a very pertinent one. Suppose that it has been determined that a cylindrical plain cutter is to be used. Then, if the surface is narrow, a straight-tooth cutter should be selected, and if heavy milling (i. e., the removal of a large amount of stock) is required, a nicked cutter or its equivalent (an inserted-tooth cutter) would be selected.

17. When it is a question of whether a plain mill, a side mill, or an end mill is to be used, it is to be observed that for side milling and end milling less power is usually required. Furthermore, when the cutter must pass over slender or pointed parts of the work, there is less springing and less breaking of the edges with a side cutter or end cutter than with a plain cutter. On the other hand, the plain cutter will usually produce the work in less time, and is the one to use when other circumstances permit it.

18. Considering now the case of grooving, when the groove is straight, it can usually be cut cheapest by plain cutters, slitting cutters, or formed cutters, depending on the profile of the groove. When the groove follows a helical path, it can be cut by an end mill, a form cutter, a

formed cutter, or an angular cutter; when the cross-section of a helical groove is required to be rectangular, a plain milling cutter or slitting cutter cannot be used, but an end mill must be employed instead. When grooves following an irregular path are to be cut, an end mill will almost invariably have to be used, although it may be possible occasionally to use plain mills or formed mills for part of the groove.

From the foregoing statements it will be seen that the selection of a cutter is a matter of judgment, which must be based on practical experience with different milling operations.

DIAMETER OF CUTTER.

19. The **diameter** of the cutter has an appreciable influence over the length of time required to machine a surface. As a general rule, it may be stated that with equal

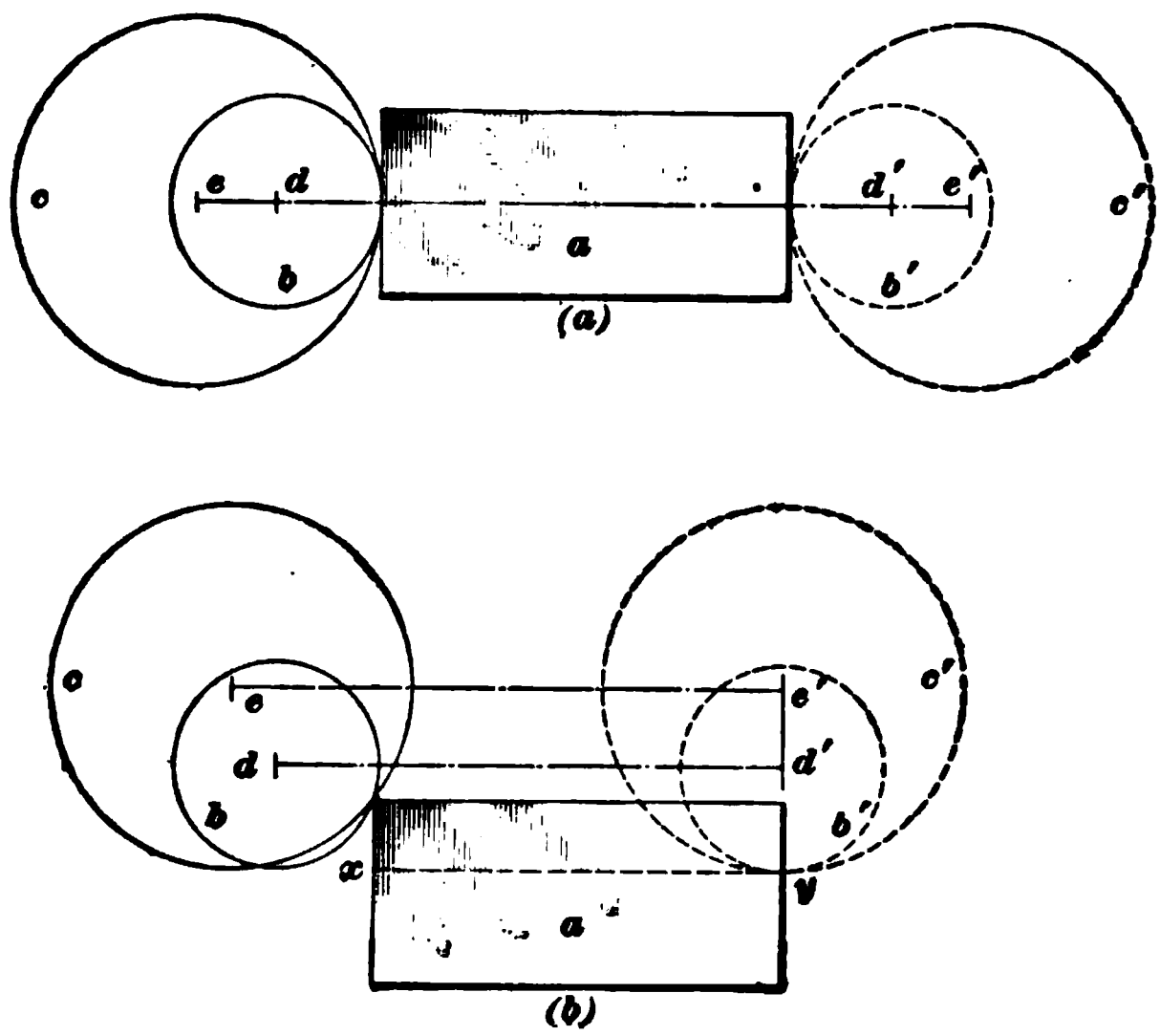

FIG. 8.

feeds per minute, a small cutter will pass over a surface in less time than a large cutter. In order to show the reason

for this statement, Fig. 3 has been drawn; it shows in diagrammatic form the positions occupied by cutters of different diameters when they begin and cease to cut. Referring to Fig. 3 (*a*), let *a* be the surface that is to be machined by an end mill. Let the circle *b* represent the diameter of one of the two cutters that are available, and let *c* be the diameter of the other. Then, at the beginning of the cut the cutters will be in the positions shown, and their axes will be at *d* and *e*. Now, in order to pass clear across the surface *a*, the cutter *b* must advance to *b'*, and its axis will then be at *d'*. It is seen that the length of the path of *b* is equal to the distance *d d'*, while the length of the path of *c* is equal to *e e'*. But, *e e'* is much greater than *d d'*, which shows that a small cutter will travel over a shorter distance than a large cutter in order to pass over the same surface. The same statement applies to plain cutters, angular cutters, formed cutters, etc.

20. Referring to Fig. 3 (*b*), assume that the work *a* is to be milled down to the dotted line *x y*, and that *b* and *c* show the diameter of two plain mills when set to begin cutting. Then, in order to pass across the work, the cutter *b* must travel the distance *d d'*, while the cutter *c* must travel the distance *e e'*, which is greater.

21. A person must not fall into the error of assuming from the foregoing that the mere fact of one cutter being smaller than the other means in itself that the work can be machined quicker in every case by using the smaller cutter, since it is only when circumstances permit equal, or nearly equal, rates of feed per minute that the smaller cutter will have the advantage. Under these conditions, on some classes of work a saving as high as 10 per cent. may be effected in the time cost by the difference of only ½ inch in the diameters of the cutters. It is well to bear in mind that the saving effected by the use of the smaller cutter is proportionally greater for short work than for long work. Referring to Fig. 3 (*a*), the distance saved by the use of the smaller cutter is $e\,d + d'\,e'$. Evidently, this saving for the

given difference in diameters remains constant, no matter what the length of the work, and it follows from this that the ratio between the saving effected and the total distance traveled by the larger cutter becomes less as the total distance becomes greater.

22. The minimum size of cutter that can be used is naturally governed by practical considerations. Thus, in the case of an end mill, it must be sufficiently stiff to stand a fair cut without bending; in the case of a plain mill, the advisability of leaving sufficient stock around the hole of the cutter governs its smallest permissible size. Again, a short cutter can usually be smaller than a very wide cutter, since the stresses to which the cutter is subjected by the cutting operation will, as a general rule, be less severe with a narrow than with a wide cutter.

LIMITATIONS AND ERRORS.

23. The limits within which work can be milled to a given size largely depend on the construction of the machine and the character of the workmanship, also on its condition and the nature of the work. With a high-grade machine in first-class condition, and using *sharp* cutters on work that is rigidly held, many jobs can readily be milled within a very small limit of variation, say $\frac{1}{1000}$ inch. In fact, on many classes of duplicate work done in large quantities, all fitting can be entirely done away with, since it is practicable to mill the work close enough for a fair fit. With a springy machine in poor condition, and dull cutters, such results cannot be obtained, and work done on them will usually call for considerable hand fitting, not only on account of the greater variation in the size but also on account of the poor quality of the surfaces produced under such conditions.

24. It is not possible to state definitely what the limit should be within which work should be milled to a given size. This limit naturally depends on the purpose of the

work; for comparatively rough work, as milling nuts, bolt-heads, the squares on the ends of taps and reamers, etc., a limit of $\frac{4}{1000}$ inch may usually be considered as allowable. Work that is milled only for finish can often vary considerably from its true size; the amount allowable must obviously be determined on the merits of each case. Parts of sewing machines, typewriters, firearms, and similar fine, small work are usually finished within a limit of $\frac{2}{1000}$ inch, although some parts require to be, and can be, finished within a smaller limit.

25. When milling large work, or finishing a rather wide surface with a plain mill, it is not always possible to obtain as close an approach to a plain surface as the planer tool with its single cutting edge will produce. One reason for this is a lack of rigidity of the machine used; another reason may be found in the fact that with a milling cutter, the pressure on the work during the cutting operation is many times greater than in the case of the planer tool, and, hence, there will be more springing of the work. Furthermore, when a plain cutter is beginning to take a chip while the work is fed against the cutter, the pressure is at first in line, or nearly so, with the surface of the work. Now, as the tooth doing the cutting advances upwards, the direction of the pressure changes, and, being upwards, tends to lift the work from its fastenings. This change in the direction of the pressure is naturally most marked in deep cuts, and if the work yields to a sensible extent, will result in an uneven surface.

26. In a planer, shaper, or slotter, however, the direction of the pressure never changes, and since its intensity is much less than with a milling machine, it follows that as far as large plane surfaces are concerned, the machine tools first mentioned can, in general, be better relied on to produce them. As a matter of course, with a very rigid machine especially designed for surface milling, and with work so rigid that deflection will be so small as to be insensible, a very close approach to a plane surface can be

obtained by milling; in general, however, it will be found that the planer has slightly the advantage. For this reason, it is customary in some places to rough out the surfaces of heavy work on some suitable form of a milling machine, and then to transfer the work to a planer, where it is finished by planing. This will, in many cases, be more economical than planing the whole job, since with a properly designed and handled milling machine, the roughing out can usually be done at a fraction of the cost of planing. While it must be conceded that at present the planer has slightly the advantage so far as truth of large surfaces is concerned, it can be confidently predicted that in the course of time, by the advent of more rigid milling machines, its superiority will not only disappear, but be surpassed. There are many heavy milling machines built today that under favorable conditions will produce true plane surfaces as well as the planer.

27. The commercial limits to the field of usefulness of the milling machine are not known, since new fields for it are constantly being found. While it will probably never entirely supersede the planer, shaper, or slotter, it can safely be predicted that it will more and more take their place for a large variety of work as the machine becomes better developed and understood.

HOLDING WORK.

GENERAL PRINCIPLES.

28. The work may be held in the milling machine by attaching it directly to the table, by holding it in a vise, by holding it between centers, or in a chuck or on an arbor attached to the index head, and, finally, by means of special fixtures. No matter in what manner the work is held, there are certain conditions that must be fulfilled in order that the machining can be done successfully. *First*, the

work must be held so rigid that it cannot slip under the pressure of the cutting operation; *second*, it must not be deformed by the clamping; *third*, it must be so supported by suitable means that it will not deflect either under its own weight or the pressure of the cut; *fourth*, it must be lined up properly so that the machining will take place in the required direction.

HOLDING WORK ON TABLE.

29. Holding Devices.—If circumstances permit, the best way of holding work to a table is to bolt it directly to it, using bolts with low heads that will slip into the T slots of the table. When this cannot be done, clamps must be used. Owing to the fact that the pressure due to the cutting operation is usually much larger than is the case in planer work, the work must be held much tighter to prevent its slipping, and, hence, in general, the clamps should be more rigid and the bolts heavier than would be required for the same job on the planer. Furthermore, a positive stop or stops should be used whenever feasible. If the table has holes in it, pins similar to planer pins may be used; in the absence of holes, a bar can usually be bolted directly to the table to form a stop, and the work can then be pushed against it. Considerable ingenuity will often be required to so clamp the work that there is no danger of its slipping, especially in vertical milling machines when the work that is attached to the table is intended to be machined all around its circumference in one setting. In such a case, there will be a tendency to rotate the work, which tendency must be counteracted either by the friction caused by clamping or by stop-pins.

30. The general character of the clamps, pins, screw pins, toe dogs, and similar clamping devices used does not differ in any essential particular from that of the corresponding devices used in planer work. Neither is there any difference as far as their application is concerned, except

that more attention must usually be paid to supporting the work on a milling machine than is required for a planer.

31. Construction of Rotary Planer.—An example of how work may be clamped to a milling-machine table is given in Fig. 4. In this case, the machine used belongs to a type designed especially for producing flat surfaces by the use of a large side milling cutter. Such machines are commonly called **rotary planers.** In the machine shown, the bed *a* has flat ways on top to which the saddle *b* is fitted. The saddle carries the spindle and cutter, which are driven by gearing from the belt pulley *c*. A suitable feed arrangement allows the saddle to be moved along the bed either by

FIG. 4.

hand or automatically; most machines have adjustable tappets by means of which the feed can be stopped at a predetermined point. As far as adjusting the cutter for the proper depth of cut is concerned, practice varies. In some machines, the spindle and cutter are movable axially to a limited extent, while in others, the table can be moved in a direction parallel to that of the spindle. Both designs accomplish the same thing and incidentally show that frequently there are a number of different ways of performing the same operation. In the particular machine shown, the table is moved by means of a feed-screw operated by the handle *d*.

32. Lining the Work.—The work *e* is a large bracket; it is intended to machine the surface toward the bed so as to be at right angles to the surface that rests upon the table. Now, in rotary planers, and also in nearly all milling machines, except those of the vertical type, and in some special machines, the axis of the spindle is parallel to the surface of the table *f*; and since a side cutter produces a surface at right angles to the axis of the spindle, it follows from the construction of the machine that if one surface of the bracket *e* rests upon the table, the other surface will be machined at right angles to it.

33. When it is required that the surface about to be machined is to be at right angles to the surface *e'*, the work must be fastened in the proper position to accomplish this. If the edge of the table that is toward the bed is parallel to the line of motion of the saddle, as is usually the case, a try square may be used for lining up the work. The stock of the square is then placed against the edge of the table and the casting is shifted until its surface *e'* touches the blade of the square throughout its length. In many cases, it will be possible to set work square by placing the stock of the try square against the edge *a'* of the bed, which naturally is parallel to the line of motion of the saddle, since it is a part of the ways on which the saddle slides. Work may be set parallel to the line of motion by the aid of inside calipers applied between *a'* and the work. When this cannot be done, the milling cutter itself may be used for testing the setting by having it first in the position shown and measuring the distance between some tooth and the work. The saddle is then fed along the bed until the tooth selected for testing is near the left-hand edge of the work; its distance from the work is then measured, and if the two measurements agree, the work is correctly set. It will be understood that the cutter must not be in motion during the process of testing.

34. Clamping the Work.—A job of the nature shown in the illustration would most likely be clamped by using

bolts and clamps, as *g*, *g*. These clamps may have one end bent to obviate the use of blocking, or they may be straight, in which case they must be blocked up. With the cutter revolving in the direction of the arrow *x*, the pressure of the cut will tend to shift the work in the direction of the arrow *y*; for this reason, a stop *h* is bolted to the table and against the surface *e'* of the work. The stop is simply a strap having two holes in it; bolts are slipped into a T slot in the table and pass through the holes of the strap, which is clamped by tightening the nuts on the bolts. It will be observed that the strap is held from slipping by friction only; it is wise for this reason to place a piece of manila paper between the table and the strap, since experience has shown that this will greatly increase the resistance to slipping. If the table has holes in it for the reception of pins, it is better to use pins for stops, since they cannot slip.

35. Use of Angle Plate for Plain Milling Machine.—Fig. 5 is an example of how a job may be clamped to the table of a plain milling machine of the pillar type, using an angle plate to hold the work square with the table. In this case, the work *a* is a sliding table for a machine tool; it has a dovetailed bottom that is to be accurately machined so that the bottom surfaces are parallel to the top. A little study will show that with this type of a machine, the milling can be done only with end mills and an angular mill fastened to a shank, if the whole bottom is to be finished in one setting, which is necessary if all surfaces of the bottom are to be correctly machined. This means that the work must be set up on edge, and since it would have but a very small bearing on the milling-machine table, an angle plate *b* can be advantageously used to insure that the bottom will be milled parallel to the top, and also to steady the work. Since the work has T slots in it, bolts can be slipped into these; they are then passed through the slots of the angle plate in order to bolt the work to it. In case the angle plate has no slots that will come opposite the slots in the work, the latter could be attached by bolts and clamps to

the angle plate. The work is held down on the milling-machine table by the clamps *c*, *c*, the rear ends of which rest on packing blocks *d*, *d*. The pressure of the cutting

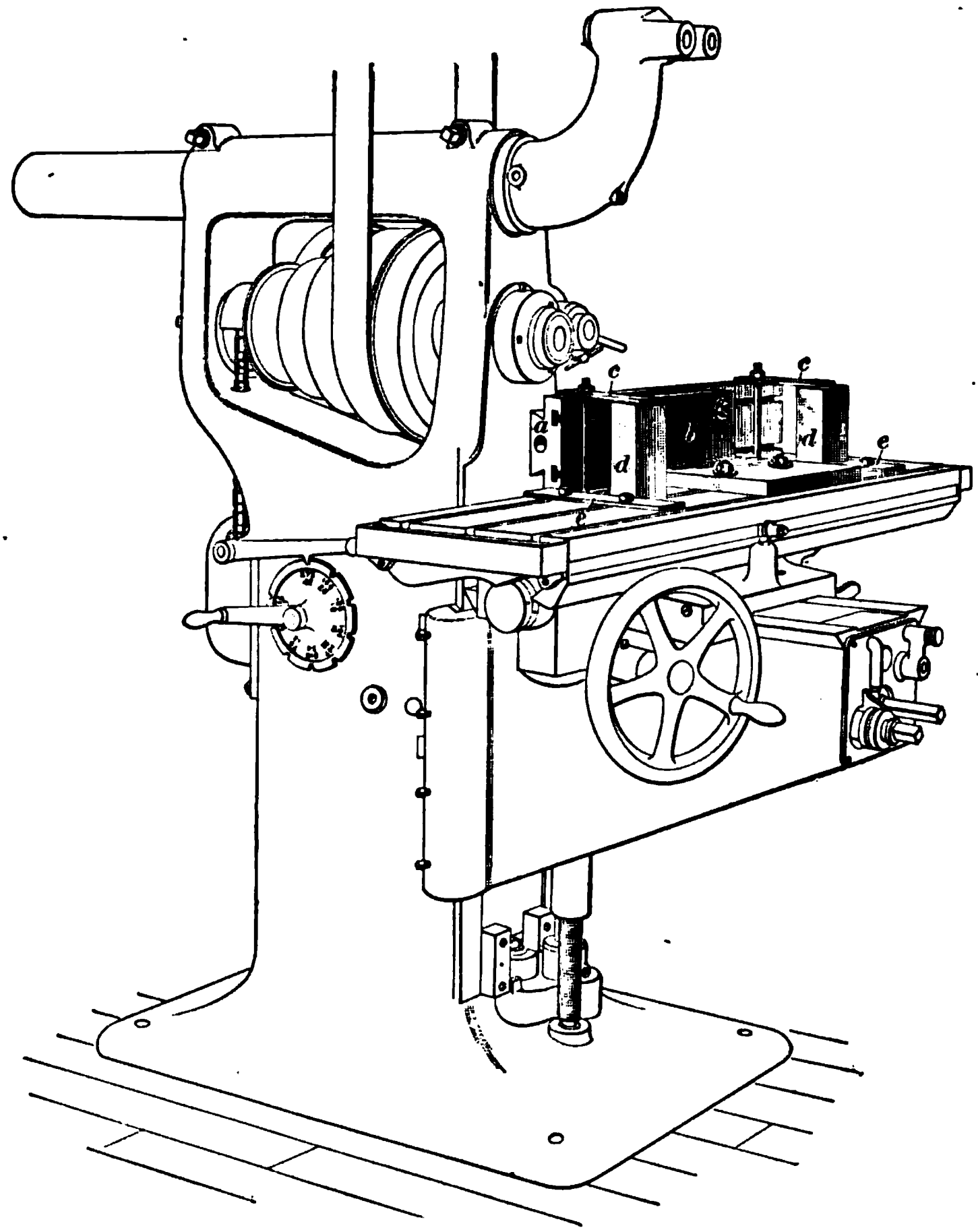

FIG. 5.

operation in this case tends to overturn the work and also to slide it along the milling-machine table; the first tendency is resisted by the angle plate and the second by

the stops *e*, *e*, which are bolted to the table in contact with the ends of the work.

36. Lining the Work.—Lining the work is accomplished, in this case, by a proper lining up of the angle plate. Since the surface of the milling-machine table, in all machines of the type shown, is parallel to the axis of the spindle, the surface of the angle plate that is toward the spindle will be at right angles to the axis, if the plate is bolted directly to the table; consequently, it only remains to line up the plate parallel to the line of motion of the table. This can be done by the aid of some suitable tool with a blunt point that is held in the spindle. Run out the table until the marking point is near one edge of the angle plate, say the right-hand one; then, by means of the cross-feed screw in the knee, move the table toward the marking point until a piece of paper will just be nipped between the marking point and angle plate. Now run the table back until the marking point is near the left-hand edge of the angle plate and see if the paper will be nipped again. If this is not the case, it shows that the angle plate must be shifted; after each shifting, the setting must be tested again in the same manner.

37. Testing the Setting of Work.—In milling machines arranged for plain or angular milling, as in the machine shown in Fig. 5, the setting of work may be tested for parallelism with the surface of the table by means of a surface gauge, which is used exactly as in planer work. When for any reason a surface gauge cannot be employed, a scriber may be clamped between the washers of the milling-machine arbor and used for testing the setting by moving the table under it. It will be understood that the spindle must be stationary during the testing.

38. A piece of work of the nature shown in Fig. 5 could have been set quicker in a vertical milling machine, since in such a machine it could have been clamped directly to the surface of the table, using finger clamps inserted in the T slots of the work for holding it.

39. Holding Work in a Vertical Milling Machine.—Fig. 6 is an example of how work may be clamped to the table *e* of a vertical milling machine when it is required to machine the circumference of the work. In this case, the job is the strap for a steam-engine connecting-rod that is to be milled with a cylindrical end mill *a*. In order

FIG. 6.

that the end of the mill may clear the table, the work *c* is placed on two parallel blocks *b*, *b*, which raise its bottom above the table. Short clamps *d*, *d* are placed on top of the strap over the clamping bolts, which have previously been inserted in the T slots of the table. The outside of

the strap can easily be finished by milling without changing the setting. After the outside is finished, clamps may be applied from the outside before the inside clamps are removed; when these outside clamps have been tightened, the inside clamps *d*, *d* are removed. By proceeding in this manner, the setting of the work will not be changed and the inside of the strap will be left clear for milling.

The straight surfaces of the strap are finished by using the regular feeds; the curved end must, however, be finished by working both feeds simultaneously by hand, cutting to a line previously drawn on the top surface of the strap, which line shows the edges of the work when finished.

40. When a job is held to the table in such a manner that it can be machined all around its circumference, it will usually be a rather difficult matter to provide positive stops that will prevent shifting, and the friction created in clamping must be relied on. It may be stated as a general rule, that whenever it is possible to use positive stops, it is advisable to do so. When friction alone prevents slipping, lighter cuts and lighter feeds must be used, and special care is required in starting the cut.

41. Construction of a Vertical Milling Machine. The vertical milling machine shown in Fig. 6 is one of the many designs in the market. The table *e* is arranged to be fed in two horizontal directions at right angles to each other; its level is fixed. The spindle *f* is adjustable in a vertical direction, and a good support close to the cutter is provided by making the headstock *g* adjustable. The table is provided with an automatic feed in both directions; the feed-shaft *h* is driven by belting it to a pulley on the spindle *f* and carries a small friction wheel that is in contact with the feed-disk *i* and rotates it by friction. The friction wheel on the feed-shaft is fitted in such a manner that it can be moved along the shaft, and, consequently, its position in regard to the center of the disk *i* may be varied. Since the rate at which the feed-disk revolves depends directly on the distance of the friction wheel from the center of the disk, it

follows that, by moving the friction wheel to different positions, the rate of feed is varied, and by shifting it past the center of the feed-disk, the feed is reversed.

42. Some vertical milling machines have a removable bottom bearing for the end of the spindle; this corresponds to the outboard bearing of the horizontal milling machine and serves the same purpose. The vertical milling machine cannot be said to be able to do work that cannot be done on the horizontal type of machine; it is more convenient, however, for work that requires to be finished with end mills, since the work is in plain sight. The job shown in Fig. 6 might have been done in the machine shown in Fig. 5 by strapping it to an angle plate; it would not have been in as plain sight, however. While the vertical milling machine shown is a *plain* machine, it is also built as a *universal* machine.

43. The peculiar advantage of the vertical machine for some work, as far as having the cut in plain sight is concerned, has led to the design of special attachments for converting a horizontal machine temporarily into a vertical spindle machine. Such attachments are supplied by all the makers of milling machines on regular orders, and are a convenient makeshift for some work, as, for example, the job shown in Fig. 7. This piece of work requires to have its top surface and all the surfaces of the recess finished by milling. If a vertical spindle machine is available, it should be chosen for doing the job; in the absence of one, a vertical milling attachment may be used on a horizontal machine. When no such attachment is available for a horizontal machine, the work must be fastened to an angle plate.

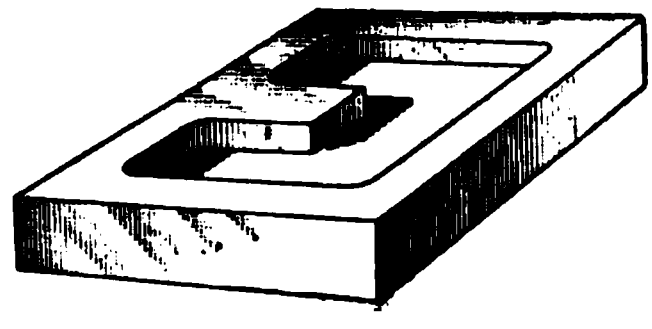

FIG. 7.

44. Lining the Work.—When it is required that the top surface of a job be finished parallel to the surface of the

milling-machine table, its setting in most cases is most conveniently tested with a surface gauge. When the sides of work are to be lined up parallel with either direction of motion of the table, the setting may be tested with a pointer clamped to the spindle, traversing the work along the pointer.

In some cases a large try square may be used; in that case, the blade may be applied to the work while the stock is placed against one of the edges of the table, which are usually made exactly parallel to the line of motion for this very purpose.

45. A Double-Headed Machine.—Fig. 8 is an example showing how work may be held on the table of a machine that resembles a planer in some respects. This

FIG. 8.

particular machine is of the multispindle type, having two independently adjustable spindles *a* and *b*, which, however, can be used for driving an arbor *c* from both ends, as is done

in this case. The work *d* is a side rod for a locomotive, which is to be milled out between the ends to an I section. The cut that is taken is quite heavy, being about $4\frac{1}{2}$ inches wide, $1\frac{3}{16}$ inches deep, and feeding at the rate of 2 inches per minute. In consequence of this, the pressure of the cutting operation that tends to slide the work along the table is quite heavy. In this case, movement of the work is prevented by letting it butt against an angle plate *e*, which is bolted to the table at the rear, and which, in turn, is prevented from shifting by struts that are placed between it and the end of the table. Owing to the view taken, these struts cannot be seen. The work is held down on the table by bolts and clamps placed at each end; the clamp *f* at the front end can be plainly seen in the illustration. Jacks *g*, *g*, each of which has two setscrews, are bolted to the table and are used for adjusting and confining the work sidewise. A double-headed machine, like the one shown, is well adapted for finishing two surfaces parallel to each other in one passage of the work past the cutters.

46. Clamping Work for Grooving.—Fig. 9 (*a*) shows how cylindrical work may be held on the table of a horizontal milling machine when a slot or groove is to be milled in it in line with the axis of the work. A milling-machine strip *a*, which has a tongue *a'* at the bottom, is bolted to the table with the tongue in one of the T slots. The surface *a''* of the strip is machined parallel to the line of motion of the table, hence, any work placed against it is parallel to the line of motion. Persons familiar with planer work will recognize the milling-machine strip as the device known as a *planer strip*, which is constructed in the same manner and serves the same purpose.

Let *b* be a shaft in which a keyway (shown in dotted lines at the top) is to be cut throughout its whole length. Then, evidently, the clamps must be clear of the cutter and, hence, must be placed about in the position shown. When the clamp is tightened on the work, the pressure will be exerted along a line as *c d*, so that the shaft will be held to

the table and against the milling-machine strip at the same time. In consequence of the direction in which the pressure acts, the clamp tends to slip in the direction of the arrow x; if the clamp used is a **U** clamp, it will simply slide off. From this it follows that a clamp with a hole to fit the

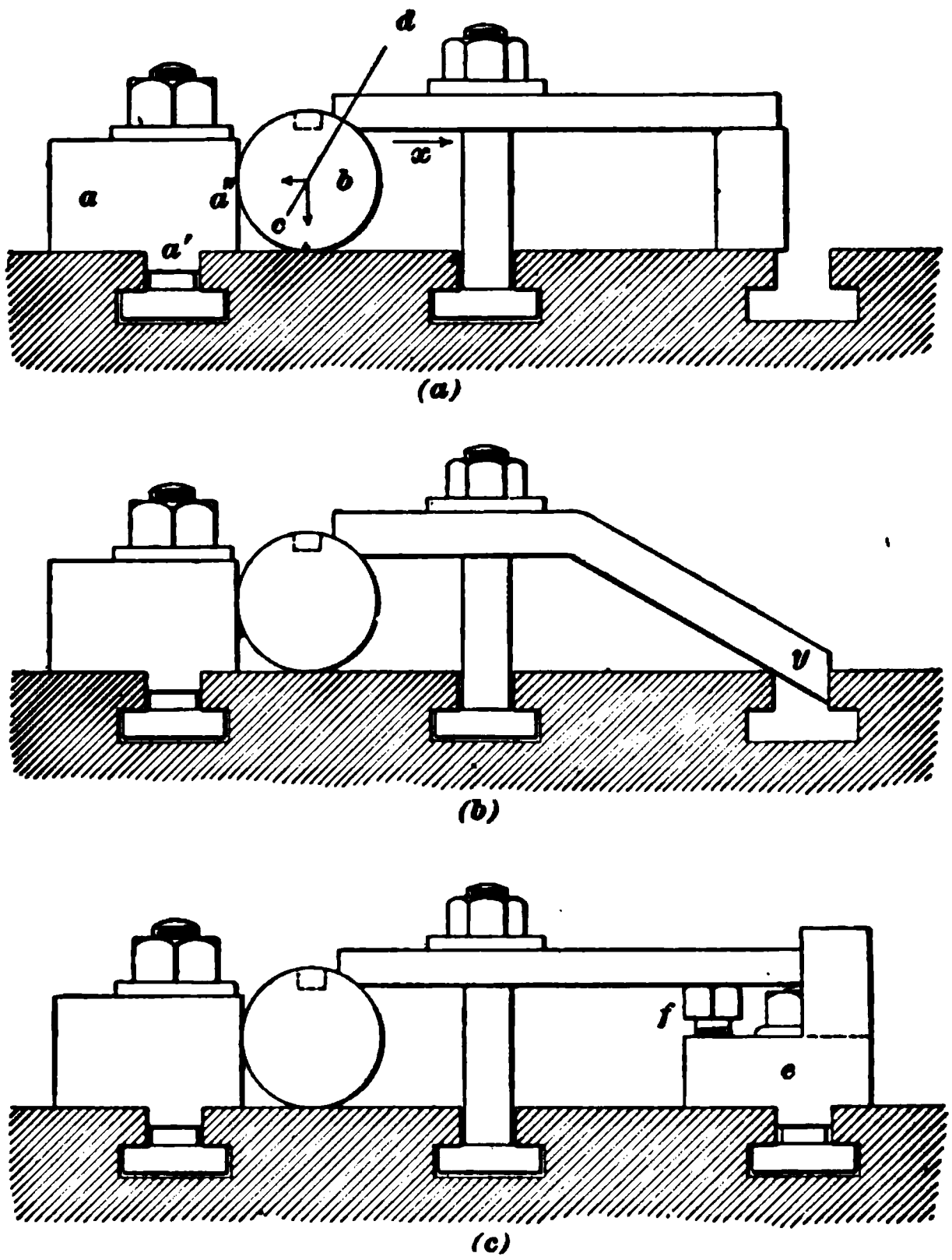

FIG. 9.

clamping bolt must be used. With such a clamp, the slipping is resisted only by the resistance of the clamping bolt to bending; if this bolt is short and stiff, it will usually be sufficient, but if it is rather long, as must be the case when the diameter of the work is large, it will bend.

47. Fig. 9 (*b*) shows how the clamp may be constructed to prevent it from slipping back. The clamp is bent and made of such a length that its rear end *y* will catch the edge of a **T** slot. Fig. 9 (*c*) shows a way of accomplishing the same thing by the use of a special packing block *e*, which has a projection on it to prevent the clamp from moving, and is bolted to the table. The block may be adjusted for different heights of work by turning the setscrew *f*; the rear end of the clamp rests on the head of this setscrew.

48. Adjustable Packing Block.—Fig. 10 is a suggestion of how a shaft that is to be splined may be held for milling with an end mill in a horizontal machine, or with a slotting cutter in a vertical machine. The shaft *b* is placed in one of the **T** slots of the table, the edges of which, being parallel to the line of motion, will line the shaft properly. The packing block *a* is adjustable for height, being made in

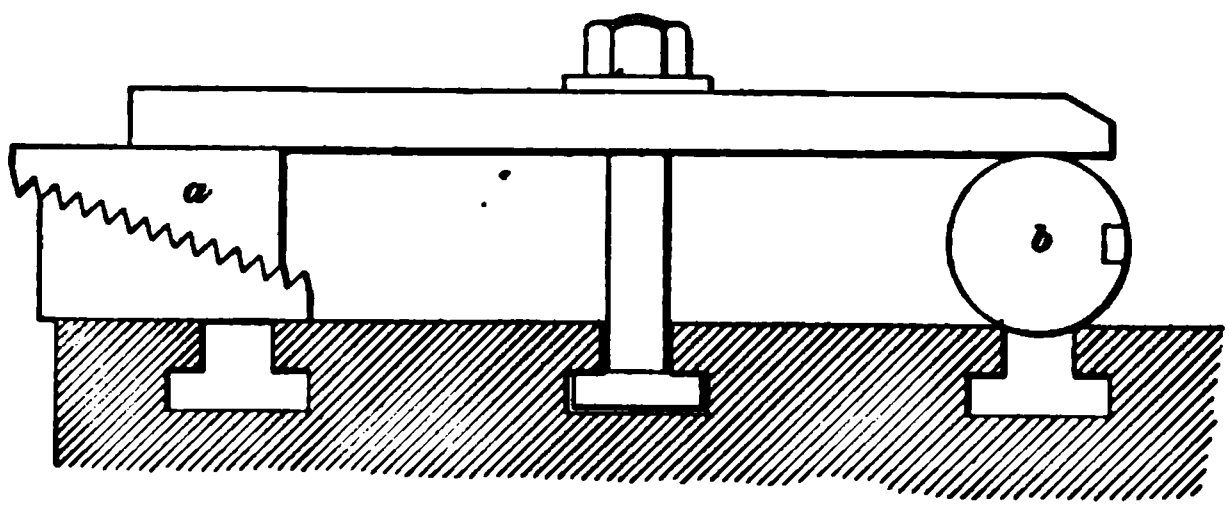

FIG. 10.

two parts that are duplicates of each other, and with saw teeth of about $\frac{1}{8}$- to $\frac{1}{4}$-inch pitch on their inclined sides. This style of packing block is very little known at present; it will be found one of the most useful articles for the milling machine, planer, drill press, etc., when much work is to be held by clamps. When work is held in the manner shown in Fig. 10, there is no tendency for the clamp to slip off in clamping, hence, **U** clamps may be used to advantage.

HOLDING WORK IN THE VISE.

49. Purpose of the Vise.—The vise used in milling-machine work is intended for holding small work having two parallel surfaces, and can only be used for other work by substituting special jaws for the regular ones. Milling-machine vises are made in various ways by the different makers; when the machine is used only for plain milling, the vise is usually made so that it can be placed on the

FIG. 11.

machine either with its jaws in line or at right angles to the direction of motion of the table, but not at any other angle. Such a vise is called a **plain vise,** and is most frequently used with plain milling machines, as, for instance, the so-called *Lincoln* type of machine shown in Fig. 11, which is intended especially for vise milling on duplicate work done in large quantities.

50. Construction of the Lincoln Miller.—The distinguishing feature of the **Lincoln** type of machine is a

vertically adjustable horizontal spindle *b* and a corresponding outboard bearing *d*. The table *a* is movable both in line with, and at right angles to, the spindle *b*; the plain vise *c* is rigidly bolted to the table (with its jaws parallel to the axis of the spindle in this case). The Lincoln type of machine is especially adapted for short cuts on work that can be held in a vise, or in any fixture that is the equivalent of a vise, and is capable, with proper handling, of doing very accurate work of the class it is intended for, since the design allows a very compact, rigid, and comparatively inexpensive machine. Machines of this design are largely used in typewriter, sewing-machine, and armory work.

51. Swivel Vise.—For general work, milling-machine vises are usually constructed with a swivel base, and are then called **swivel vises.** One design of such a vise is shown in Fig. 12 (*a*). It has a movable jaw *a* and a fixed jaw *b*; the jaw *a* can be set up by the screw *c* and crank handle *d*. The base is circular and graduated into degrees; it can be swiveled around on the subbase *e* and clamped to it in any position. This subbase is bolted to the milling-machine table; it usually has tongues that fit a T slot of the table and insure that a zero mark on the subbase is in line with one, and at right angles to the other, direction of motion of the table. The

(a)

(b)

FIG. 12.

graduation on the base of the vise, as a general rule, is so placed that when its zero coincides with the zero mark of the subbase, the jaws will be in line with the spindle. Consequently, the reading of the graduation indicates the angle included between the vise jaws and the axis of the spindle.

52. In a regular milling-machine vise, the vertical surface of the jaws is always exactly at right angles to the surface of the table; consequently, if any work is held between the jaws, its top surface will be milled square with the sides in contact with the vise jaws when a cut is taken in a direction across the jaws, and the measurement is made in the direction of the cut.

53. The milling-machine vise is used in the same manner as in planer work, and the same appliances and methods are employed for lining up the work and holding it fairly against the fixed jaw. It must always be remembered, however, that the pressure of the cutting operation is much greater in milling-machine work; for this reason, the vise must be clamped very solidly to the bed, and in case a cut is taken parallel to the vise jaws, the work must be held very tight.

54. Universal Vise.—The milling-machine vise shown in Fig. 12 (*a*) can only be swiveled in a horizontal plane. Toolmakers, however, often have occasion to take cuts where a vise adjustable in a vertical plane would be not only very convenient, but would also allow the work to be held in a better manner than is possible if only a swivel vise is at hand. Such a vise is shown in Fig. 12 (*b*); it is known as a **universal** vise. The universal vise shown consists of three parts, which are the base *a*, the knee *b b*, and the vise *c*. The knee is made in two parts, which are hinged together; the lower part of the knee can swivel on the base and can be clamped thereto. The vise itself swivels on the upper part of the knee. The knee can be opened sufficiently to bring the vise vertical, and can be securely braced in any position by the bracing levers *d*, *d*, which are joined by a clamping bolt. This vise can be swung to almost any

position, and, consequently, its range of usefulness is greatly extended over that of the swivel-base vise.

55. False Jaws.—In all milling-machine vises, the jaws are faced with removable false steel jaws, as *f*, *f*, Fig. 12, which makes it an easy matter to substitute special jaws to hold special forms of work. Fig. 13 shows such a pair of special jaws, with the work *a* between them; it will be suggestive of other ways in which such jaws may be made. The false jaws *b*, *b* are fastened to the jaws of the vise by fillister-headed screws that fit the tapped holes *c*, *c*. These special jaws not only serve to hold work of a special form, but also support it close to the cut. Thus, in Fig. 13, the exposed top surface of the work is to be finished by a formed cutter; reference to the illustration shows the top of the false jaws to have been made to conform to the profile of the work, but clearing it slightly. The rigid support of the work prevents any springing and allows a wide cut to be taken with very little, if any, chattering.

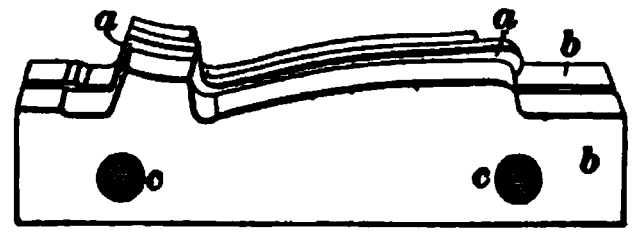

FIG. 13.

56. Setting the Vise.—There are two cases that arise in practice in setting a vise, which are: setting it at a given angle to the axis of the spindle, and setting it at a given angle to the line of motion of the table. In plain horizontal milling machines, the two cases do not differ in the least, since the construction of the machine insures that when the vise is set in respect to the axis of the spindle, it is also set correct for the line of motion of the table. In vertical milling machines, and also in universal milling machines, when the table is swung from its zero position, that is, when its line of motion is not at right angles to the axis of the spindle, the vise must be lined up with the line of motion.

57. Plain milling-machine vises as a general rule have two slots at right angles to each other cut in the bottom; tongues that fit a **T** slot of the table are fastened in these

slots and insure that the vise jaws are at right angles to, or in line with, the line of motion of the table. In horizontal machines in which the table cannot be swiveled, as in plain milling machines, and also in universal machines *when the table is set at zero*, the tongues insure that the vise jaws are either at right angles or parallel to the axis of the spindle, depending on the position of the vise.

58. Graduated swivel-base vises usually have the zero mark on the base so placed that when it coincides with the zero of the graduation, the jaws will be at right angles to the line of motion of the table. Hence, to set the jaws in line with the line of motion, make the 90° mark coincide with the zero mark.

59. There are various designs of swivel-base vises in use that have no graduations. In horizontal machines where the table cannot be swiveled, and in universal machines when the table is at zero, the vise may be lined so that its jaws are parallel to the axis of the spindle (at right angles to the direction of motion of the table) by

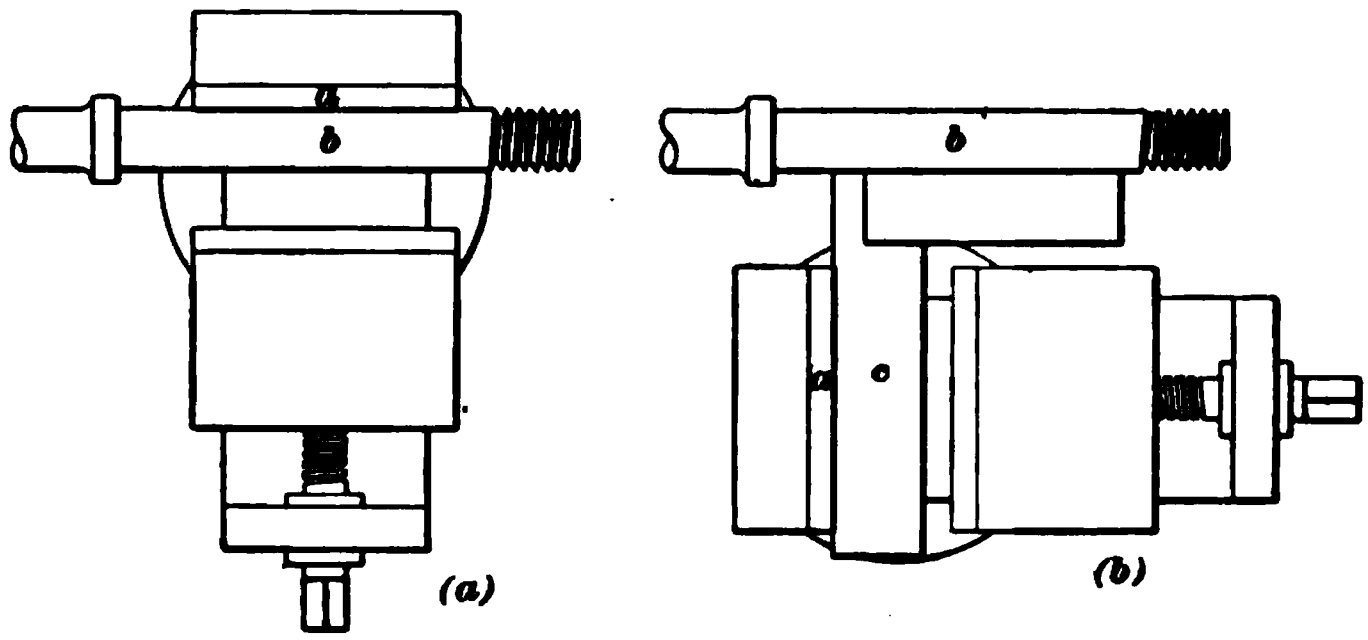

FIG. 14.

placing the fixed jaw *a* against the arbor *b*, as shown in Fig. 14 (*a*). To place the jaws at right angles to the axis of the spindle, apply a try square *c* to the fixed jaw *a* and the arbor *b*, as shown in Fig. 14 (*b*). To set the jaws at a given angle other than a right angle, apply a bevel protractor to the arbor and fixed jaw.

60. So far it has been supposed that the arbor runs exactly true. If this is not the case, the vise jaws must be set in a slightly different manner. Run back the table until one of the corners of the fixed jaw, as *b*, touches the arbor, as shown in Fig. 15 (*a*). Measure the amount of opening between the corner *a* of the fixed jaw and the arbor. Now give the spindle half a turn and move the table until the corner *a* is in contact with the arbor. Measure the amount of space between the corner *b* and the arbor;

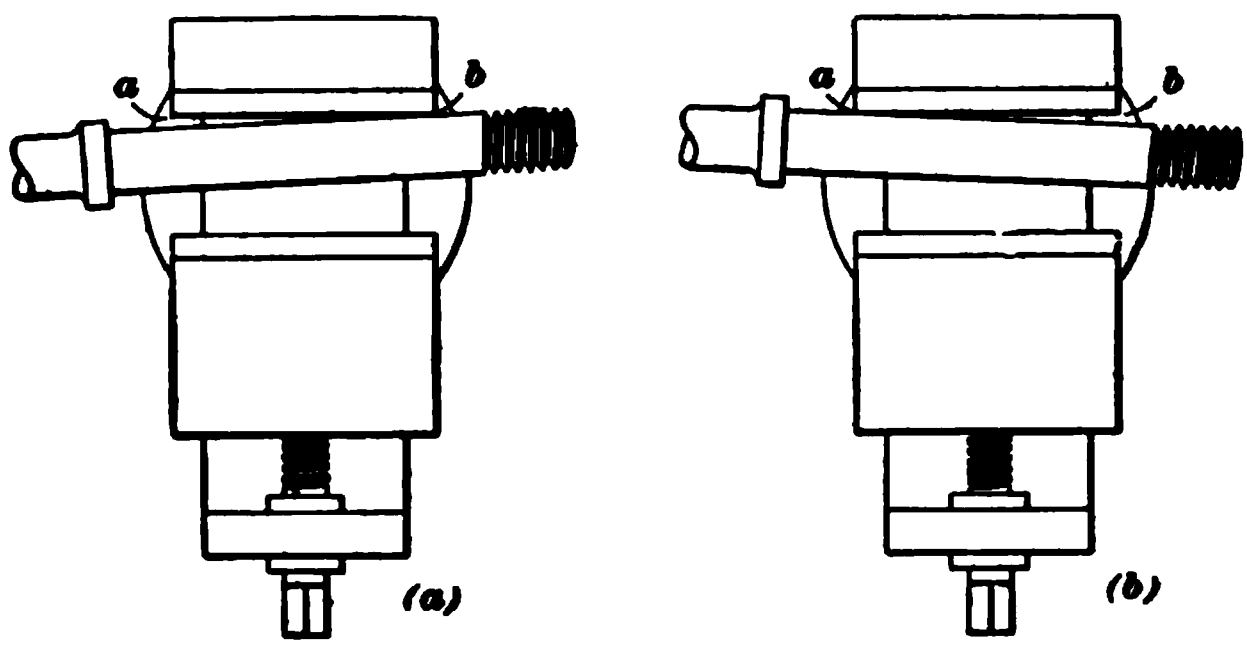

FIG. 15.

if this agrees with the first measurement, the vise is correctly set; otherwise, it must be shifted until the measurements do agree. The same operation may be used for setting the vise jaws square to the axis of the spindle, or at an angle.

It has here been supposed that the arbor is bent directly at the shoulder. When this is not the case, as, for instance, when the arbor has one or more short kinks in it, the method of testing the setting that has just been explained, should not be relied on. The proper thing to do is to procure a true-running arbor.

61. A swivel-base vise without a graduation, or a graduated-base vise that is to be tested for the correction of its zero mark, may be set with its jaws parallel to the line of motion of a vertical milling-machine table as follows: put an arbor in the spindle and move the table until the arbor *a*, Fig. 16 (*a*), is near one corner of the fixed jaw *b*. Put a

parallel strip of metal *c* between the arbor and the vise jaw, and by means of the cross-feed, move the vise toward the arbor until the feeling piece *c* just touches the arbor and the fixed jaw. Remove the feeling piece and then move the table in the direction of its line of motion, which is shown

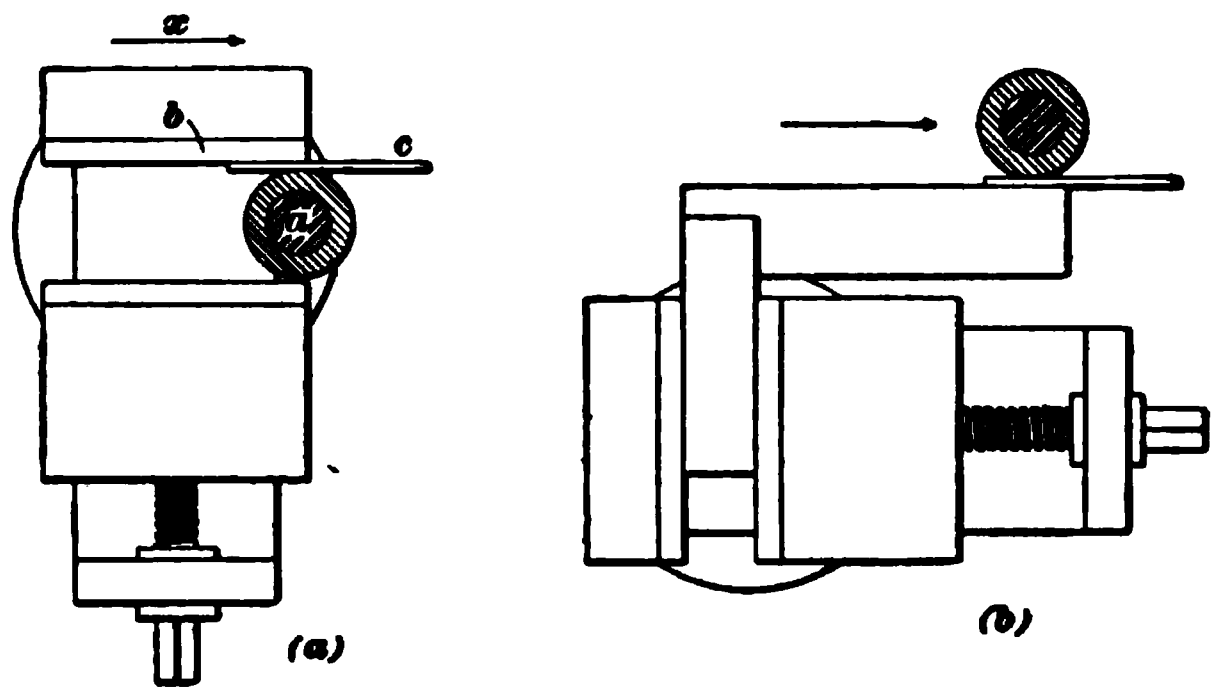

FIG. 16.

by the arrow *x*, until the arbor is near the opposite corner of the fixed jaw. Insert the feeling piece again and observe if it is in contact with the fixed jaw and arbor. If this is not the case, or when the feeling piece will not go in, the vise must be shifted and the testing repeated.

62. To set the vise jaws square to the line of motion, clamp a try square between the jaws and test along the blade, as shown in Fig. 16 (*b*). To set the vise to an angle when the base is not graduated, instead of the try square, use a bevel protractor set to the correct angle.

The method of setting a vise explained in connection with Fig. 16 may also be used for horizontal milling machines, clamping a heavy bent piece of wire to the arbor and using its point for testing.

63. Holding Round Work.—The regular milling-machine vise is not well adapted for holding round work, owing to the fact that the jaws are in contact with such work only along one line. Hence, if the vise is tightened on the work, the jaws will mar it along the lines of contact.

If the vise is used for holding round work, the marring may be lessened, and, at the same time, the work may be held more firmly by placing strips of soft sheet copper or sheet brass between the jaws and the work.

64. When much round work is to be done in the vise, it will be found advisable to make a V-shaped false jaw, as is shown in Fig. 17, which will cause the work to be held along three lines of contact, as *a*, *b*, and *c*, and prevent it from tipping upwards or downwards when a cut is taken over its top surface. Strips of sheet brass may be placed between the jaws and the work to prevent marring.

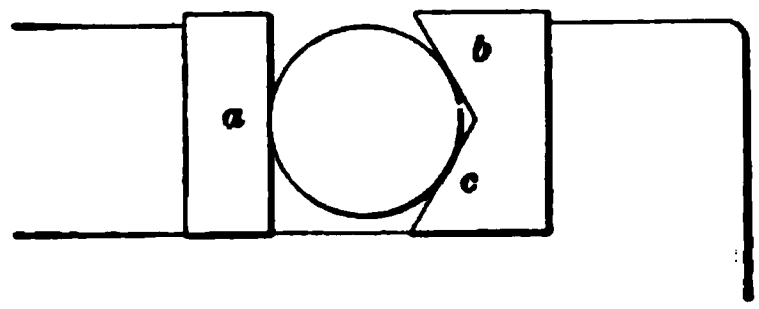

FIG. 17.

65. Split Vise Chuck.—When a large quantity of cylindrical work (all pieces having the same diameter) is

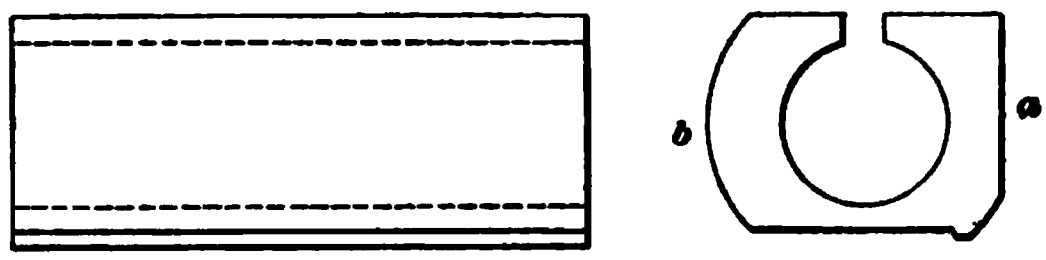

FIG. 18.

to have milling done on it after the cylindrical surface is nicely finished, the **split vise chuck** shown in Fig. 18 may be used. This is made from a rectangular piece of steel; it has a hole bored through it to fit the work and is split on top throughout the whole length. In use, the flat surface *a* is placed against the fixed jaw and the curved surface *b* against the movable jaw; the vise is then tightened somewhat and the chuck holding the work is seated fair on the bottom of the fixed jaw by tapping it lightly with a soft hammer. When this

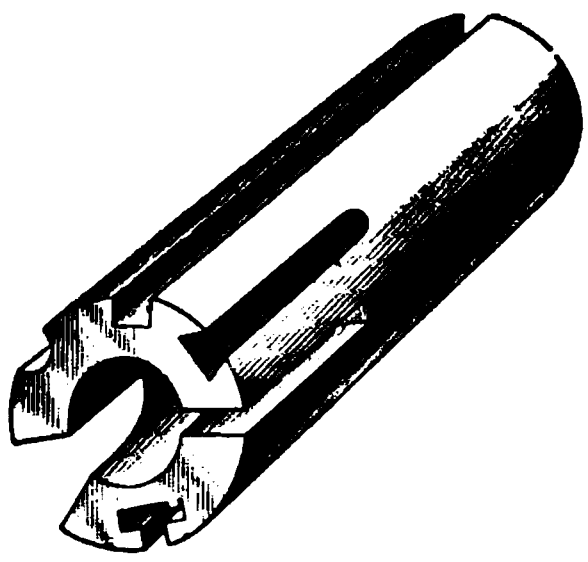
FIG. 19.

has been done, the vise is tightened again. The curved surface *b* allows a slight variation in diameter of the work, since it allows the chuck to easily adjust itself. At the same time, it insures a fair bearing of the flat surface against the fixed jaw. Fig. 19 is given as a suggestion of what work may be done on a cylindrical job held in a split vise chuck.

66. A Special Vise.—Plain milling machines are often used entirely for making simple cuts on cylindrical work; in such a case, a special vise may be used, as, for instance, the one shown in Fig. 20. In this vise, which may be made vertical, as, for instance, the one shown, when the character of the work makes it a more convenient design, the movable jaw *a* is flat and the fixed jaw *b* is V-shaped; hence, the work *c* will be automatically lined up and firmly held. The resemblance of the vise jaws to the special jaws shown in Fig. 17 should be noted.

FIG. 20.

HOLDING WORK WITH INDEX CENTERS.

67. Types.—Index centers are made in two types to suit different classes of work, which are known respectively as *plain* and *universal index centers.* Each manufacturer naturally has designs of his own for each type; they all embody the same general features, however, which are: a live spindle that can be rotated at will through a definite part of a revolution, and a tailstock carrying the dead center. The distance between the two centers is made adjustable to accommodate different lengths of work.

68. Plain Index Centers.—Fig. 21 shows one design of a set of plain index centers, which consists of an **index**

head *a* and a **tailstock** *b*. In this particular case, the tailstock forms part of the bedplate *b'*, and the index head is movable along this bedplate. In many designs, however, the index head and tailstock are not placed on a bed, but are clamped directly to the table of the milling machine; in that case they usually have tongues on the bottom that fit a T slot of the table and insure the proper alinement of the index centers. The headstock *a* carries the live spindle to which an index plate *c* is fitted. The back of the index plate has several concentric rows of holes, which are spaced equidistant in each separate row; an index pin *d* is inserted

FIG. 21.

in a movable bracket *e* in such a manner that its pointed end may be made to engage with any row of holes. The holes in the index plate are used for obtaining divisions of the circle, that is, to indicate when the spindle has been revolved a given number of degrees. The divisions obtainable depend on the number of holes in the different rows; they are the quotients obtained by dividing the number of holes in each row by all the whole numbers by which it is divisible. In each case, the divisor shows how many holes the index plate must be moved for each division.

The spindle is placed in line with the dead center, and cannot be moved in a vertical plane. It carries a live center and a face plate that takes the tail of the dog used for confining the work; a setscrew *f* confines the tail of the dog. The dead center has a limited range of adjustment in line

with the axis to allow work to be placed and removed from between the centers without having to move the index head.

Some designs of a plain index head allow a universal lathe chuck to be screwed to the live spindle; this greatly increases the range of usefulness. Practically all designs allow the live center to be removed; an arbor or a collet may then be inserted for holding the work.

69. Universal Index Head. — Fig. 22 shows one construction of a universal index head. The chief point of difference from the plain index head is that the index-head spindle is movable in a vertical plane, and can be swung, according to construction, through an arc of from 110° to 200°. In the design shown, the head *a*, which carries the spindle, is mounted in a circular guide of the frame *b*, and may be rigidly clamped to it in any position within its range of movement. The head *a* is graduated into degrees, and a zero mark placed on the frame indicates, by its coincidence with a graduation mark, how many degrees the axis of the spindle deviates from its horizontal position. The tailstock *f* is bolted to the table, and is made movable in order to accommodate different lengths of work.

FIG. 22.

70. In this particular design, the spindle carries an index plate *c* with holes in it, which may be used for rapid indexing for the most commonly used divisions of the circle. A worm-wheel, which is inside of the head, is fastened to the live spindle; a worm, keyed to a shaft, meshes with this wheel. This shaft carries an index pin *d*, which can be made to engage with any of the concentric rows of holes of the index plate *e*, which is fastened to the head. The spindle is rotated by turning the worm-shaft by means of the index pin, which, when withdrawn from the plate, forms the handle of a crank.

Universal index heads are often constructed in such manner that the feed-screw of the table and the worm-shaft may be connected by suitable gearing; the spindle of the index head will then revolve at the same time that the table moves in a straight line, and the combination of these two movements will allow helixes and spirals to be cut. Such a universal index head is given the name of **spiral index head.**

71. Work Done Between Centers.—The work that is most commonly done between centers is the fluting of taps and reamers; the milling of the spaces of milling cutters; the cutting of small gear-wheels and sprocket wheels; the milling of squares on the end of cylindrical tools; the cutting of short keyways, and similar work.

72. Confining the Work.—Work held between the centers is caused to rotate with the spindle by a dog; to prevent any rocking of the work the tail of the dog must be confined by a setscrew, which is always fitted to the face plate or driver. When the tail cannot be confined with the setscrew, a wooden wedge may be driven in between the tail and the driver. Ordinary lathe dogs are not particularly well adapted for milling-machine work, since their tails will rarely come opposite the setscrew in the driver. A regular clamp dog will be found to be more satisfactory in all respects than the lathe dog, since not only will it not

mar the work as much, but it will also allow the tail to be brought opposite the setscrew on all kinds of work within its range.

73. Lining the Centers.—The construction of plain index centers insures that they are always in line. Universal milling-machine centers, however, require lining up in a vertical plane when a cut is to be taken parallel to the axis of the work. Their construction insures that a line joining the live center and the tailstock center will always lie in a vertical plane parallel to the line of motion; hence, no lining up sidewise is ever required, if their tongues are placed in a T slot of the table.

74. There are two cases that may arise in practice, which require a slightly different method of procedure to line the centers up to the same height. When the tailstock center is not movable in a vertical plane, as in the case of the tailstocks shown in Figs. 21 and 22, proceed as follows: Set the index head as closely as possible by the zero mark on the frame and the zero of the graduation on the head. Then place some piece of metal, as *a* in Fig. 23, one end of which has been turned to run true, between the centers, with the turned end toward the tailstock. Now adjust the pointer *p* of a surface gauge to just touch a feeling strip of paper placed on top of the turned end. Next, turn the piece *a* end for end, set up the tailstock center, and placing the feeling strip on *a* again, notice if the pointer will touch it. If it does not touch, it shows that the spindle has been depressed too much and requires raising; conversely, if the pointer will not pass over the piece, the spindle is too high.

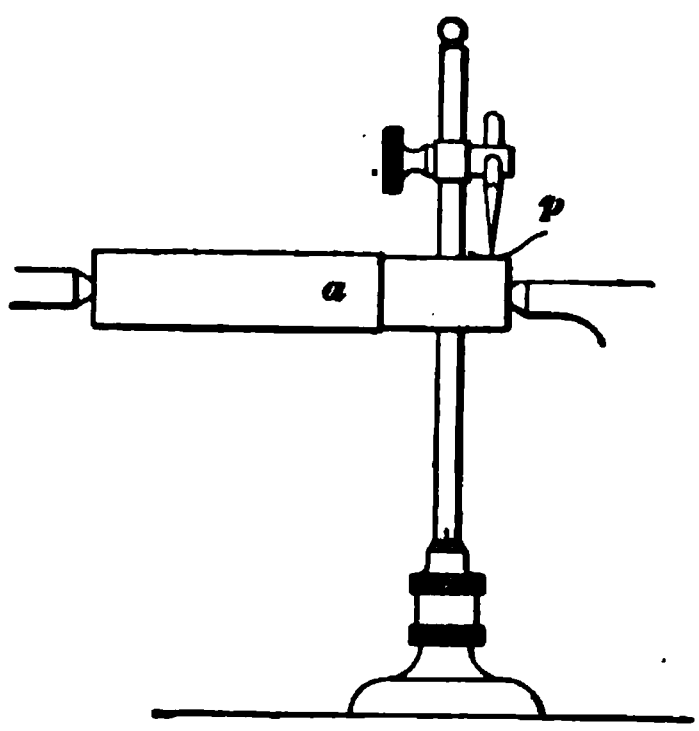

FIG. 23.

75. When the tailstock is so arranged that the dead center is movable in a vertical plane, set the index head to zero as accurately as possible. Now place a true-running milling-machine arbor in the index-head spindle (practically all modern milling machines have the same taper hole in the spindle and index-head spindle, and, hence, the arbor intended for cutters may be used) and adjust the pointer *p* of a surface gauge to just touch its top near the shoulder, as shown in Fig. 24. Shift the surface gauge to the end of the arbor; if the pointer just touches the top again, the index-head spindle is set parallel to the line of motion of the table. To adjust the tailstock center, use a piece as explained in connection with Fig. 23, placing its turned end toward the index head at first. Raise or depress the tailstock center until the pointer of the surface gauge shows it to be of the same height as the live center. When the centers are in line, the cut will be parallel to the axis of the work, no matter what kind of a cutter is used.

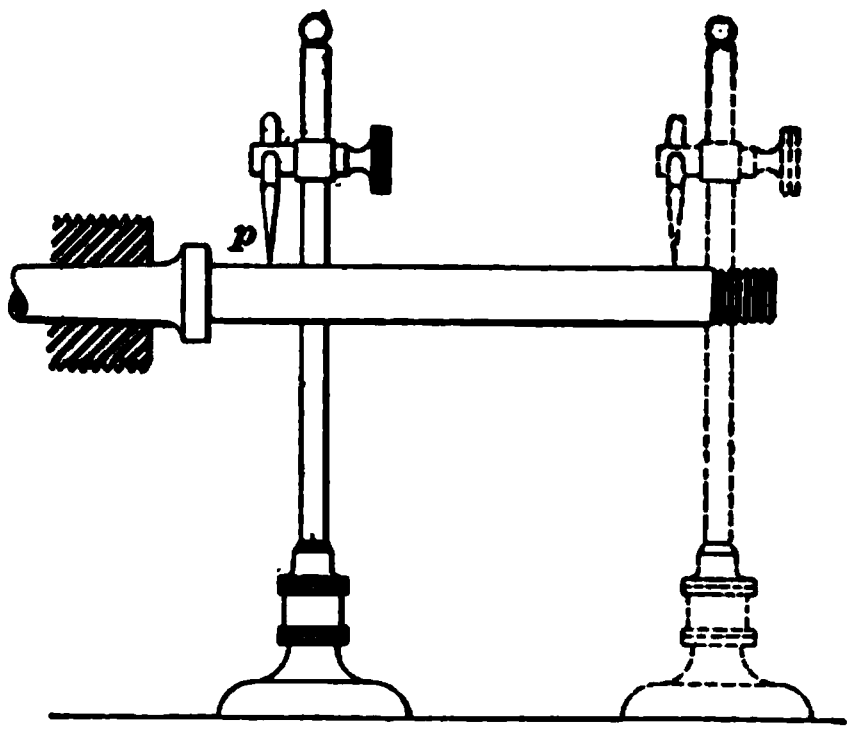

FIG. 24.

TAPER WORK BETWEEN CENTERS.

76. Cases Arising in Practice.—When cuts are to be taken at an inclination to the axis of work held between milling-machine centers, that is, when tapering work is to be milled, the work may be set to the required inclination in various ways depending on the construction of the milling-machine centers available.

The cases that may arise in practice are as follows: (*a*) Neither the index-head spindle nor the tailstock is

adjustable in a vertical plane, as is the case with the plain centers shown in Fig. 21. (*b*) The tailstock is adjustable in a vertical plane. (*c*) The index-head spindle may be swung in a vertical plane. (*d*) The index-head spindle may be swung in a vertical plane and the tailstock is adjustable vertically in the same plane. (*e*) The index-head spindle and the tailstock may be swung simultaneously in a vertical plane around the center of rotation of the index head.

77. Non-Adjustable Index Head and Tailstock. Taking up case (*a*), there are two ways in which tapers may be milled, depending on the kind of machine and milling cutter available. Using a horizontal machine and a plain cutter, the axis of the work *a*, Fig. 25 (*a*), may be brought to the required inclination to the line of motion *x y*, by packing up under one end of the bed *b'*, Fig. 21. This preserves the true alinement of the centers; that is, the axis of the index-head spindle coincides with the axis of the dead center irrespective of the inclination of the axis of the index-head spindle to the line of motion. When this is the case, the work will always revolve in perfect unison with the spindle; that is, the angular movements of the spindle and work will always be alike, in consequence of which, it is possible to divide tapering work into even divisions. There is no axial movement of the tail of the dog during the revolution of the work, and there is no cramping and springing.

78. When plain centers are used for a vertical milling machine and an end milling cutter is employed, the adjustment is identical with the one just described. When a plain cutter is to be used in a vertical milling machine, or an end mill in a horizontal machine, the centers must be shifted sidewise; that is, they must be moved in a horizontal plane until the horizontal angle between the axis of the work and the line of motion of the table is equal to the desired angle. When the bed of the centers has tongues fitting a **T** slot of the table, it will be necessary to interpose parallel bars between the table and the bottom of the bed.

79. Raising the Tailstock.—Case (*b*) usually occurs with plain centers that are fastened directly to the table, and when using a face cutter in a horizontal milling machine, or an end mill in a vertical machine. The axis of

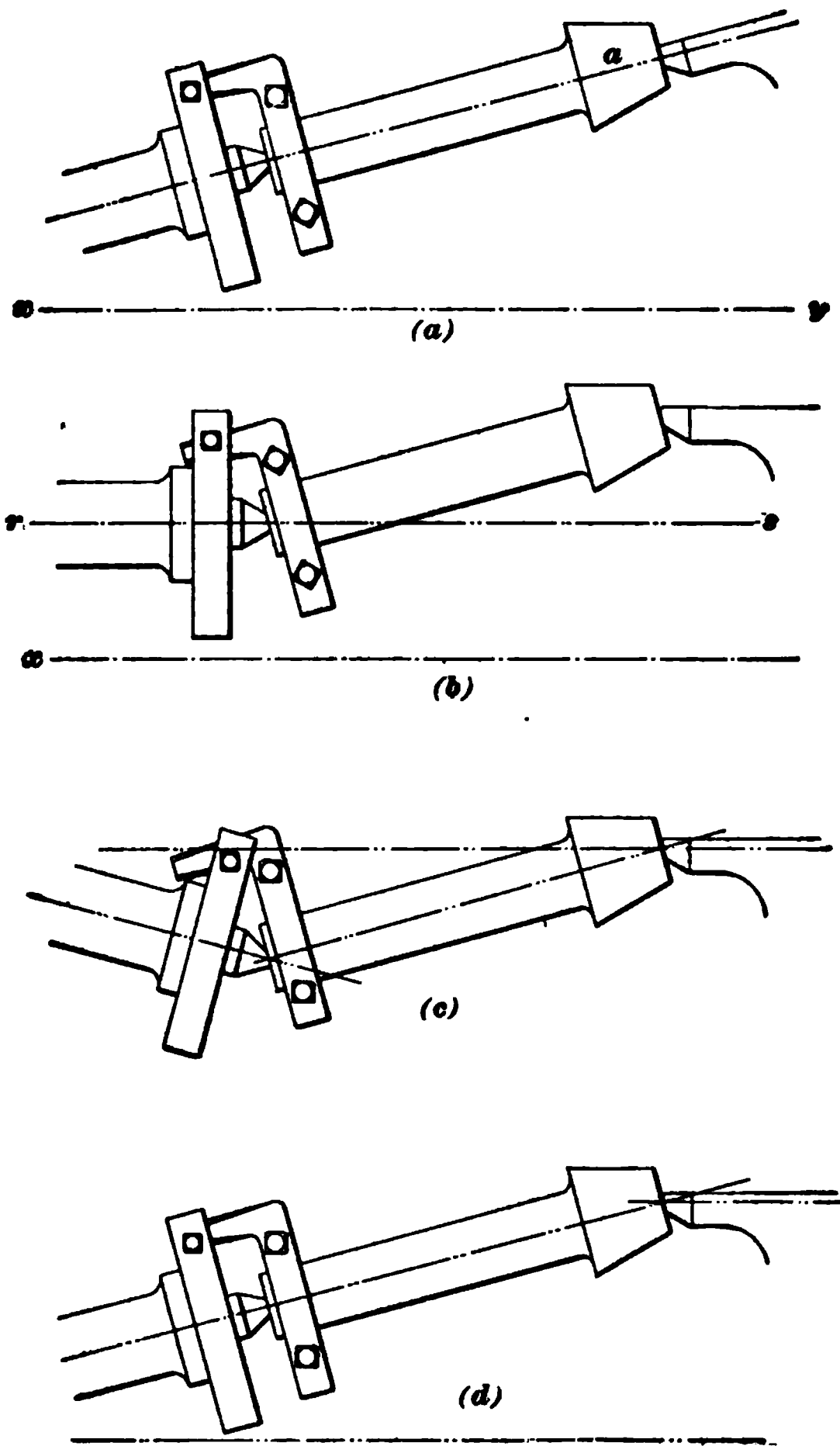

FIG. 25.

the work is then often given the required inclination by blocking up either the index head or the tailstock with suitable packing blocks. The position of the centers in that

case is shown in Fig. 25 (*b*). Now, in packing up with parallel packing blocks, the axis of rotation *r s* of the spindle remains parallel to the line of motion *x y* of the table, but the axes of the work and spindle are at an inclination to each other. This condition is equivalent to that existing in lathe work when taper turning is done with the tailstock center set over, and the same trouble is experienced as in lathe work; that is, the angular movements of the spindle and work are not equal. In other words, with the centers out of line, it is not possible to obtain even divisions of the work with even indexing. The trouble is intensified by the fact that the tail of the dog in milling-machine work requires to be confined with a setscrew. If the different positions of the tail during one revolution of the work be observed carefully, it will be seen that it not only slips to and fro in the slot of the driver, but it also has a rocking motion at the same time. Now, if the spindle is revolved while the setscrew is set against the tail, the latter will be cramped, and either must bend or the work must spring. For this reason, whenever work held between centers that are not in line with each other is revolved, the setscrew should be loosened before revolving the index-head spindle and tightened again on the completion of the movement. While this will prevent springing of the work, it will *not* insure even divisions.

80. When plain centers or universal centers intended to be fastened directly to the table are to be used in a horizontal machine for taper work where the cutting is to be done by an end mill, or by a plain mill in a vertical machine, the centers must be shifted sidewise; i. e., in a horizontal plane, until the line joining them makes the required horizontal angle to the line of motion of the table. For this purpose, raising blocks, if available, may be used; in the absence of such blocks, the centers may be blocked up on parallel bars. In order to obtain even divisions, place the tailstock center so that it coincides with the axis of the index-head spindle. Instead of fastening the centers separately to the table, it will be found much better to have them attached to a

temporary bed, which insures their always being in line, and swivel the bed upon the table.

81. Adjustable Index Head.—Case (*c*) occurs with some designs of universal index centers, where the tailstock is not adjustable in a vertical plane, and when the work is done with a face cutter in a horizontal machine, or an end mill in a vertical machine. The index head is then raised or depressed to suit the taper. All that can be said for this method is that it still further aggravates the evils of unequal spacing and cramping of the dog. Comparing equal tapers, case (*c*) will give errors slightly more than double those due to case (*b*). Whenever the nature of the work allows it at all, it is best to place the work between the centers so that the index-head spindle is raised above a horizontal plane; the tailstock can then usually be blocked up by packing blocks or parallel bars until the axis of rotation of the index-head spindle coincides with the dead center, as shown in Fig. 25 (*d*). When this is done, even divisions will be obtained and there is no cramping of the dog or springing of the work. The only objection to the use of a parallel packing block, or parallel bars, for raising the tailstock is that the dead center will not have a fair bearing in the countersink of the work. When conditions permit, a tapering packing block may be made in order to overcome this trouble.

82. Adjustable Index Head and Tailstock.—When the tailstock center is adjustable in a vertical plane independently of the live center, which is case (*d*), the tailstock center may be raised until it coincides with the axis of rotation of the spindle. Even divisions may then be obtained.

83. Taper Attachment.—Case (*e*) involves a special construction of the index centers ; Fig. 26 shows the design that has been adopted by the Brown & Sharpe Manufacturing Company for this purpose. In this device, the live center *a*, which fits the tapering hole of the index-head spindle, has a large cylindrical collar in front that closely fits a bored

hole in an arm of the bed *b*. The tailstock *c* is mounted on this bed in such a manner that it can be moved along to accommodate different lengths of work; the construction of the bed insures that the dead center is always in line with the axis of rotation of the live center. In use, the live center is driven home in the index-head spindle; the index head is then raised until the required inclination has

FIG. 26.

been reached and the free end of the bed, which swings with the index head, is tied to the table by clamping it to the bracket *d*. This bracket has previously been bolted to the table. The device shown insures that the axis of rotation of the live center always coincides with the dead center, and, consequently, even divisions may be obtained.

84. Precautions to be Observed.—The precautions to be observed in milling taper work between centers when even divisions are to be obtained may be summed up as follows: *the axis of rotation of the spindle and the axis of rotation of the work must coincide.* When this condition is not attainable, it is impossible to obtain even divisions. When the angle of inclination is small, the errors of division will be very small; they will rapidly increase, however, for any increase of the inclination.

85. It is to be noted that with a constant difference of elevation between the centers, the angle of inclination of the axis of the work to the line of motion of the table in cases (*b*), (*c*), and (*d*) will vary for different lengths of work, and, hence, the tailstock center must be moved up or down for different lengths of work if the angle of inclination

is to be kept constant. In cases where the two centers are attached to a separate bed that preserves their alinement, and where the bed is then inclined or swiveled, as in case (*a*) or (*e*), for instance, the angle of inclination to the line of motion is not affected by the distance between the centers; i. e., by the length of the work. In case (*c*), it is to be further noted that no attention must be paid to the graduation marks of the index head ; these do not show the angle of inclination between the axis of the work and the line of motion of the table. In case (*d*), however, the graduations will correctly indicate the angle of inclination, but only when the tailstock center has been raised enough to make the axes of rotation of the index-head spindle and work coincide. As far as case (*e*) is concerned, the construction insures that the graduation marks correctly indicate the inclination.

86. Milling-Machine Dog.—In Art. **79** it was mentioned that the tail of the dog will cramp badly when taper work is done with the centers set out of line. The dog shown in Fig. 27 (*a*) overcomes this trouble entirely; it requires a pair of special driving jaws to be attached to the regular driver or face plate. Referring to the figure, it

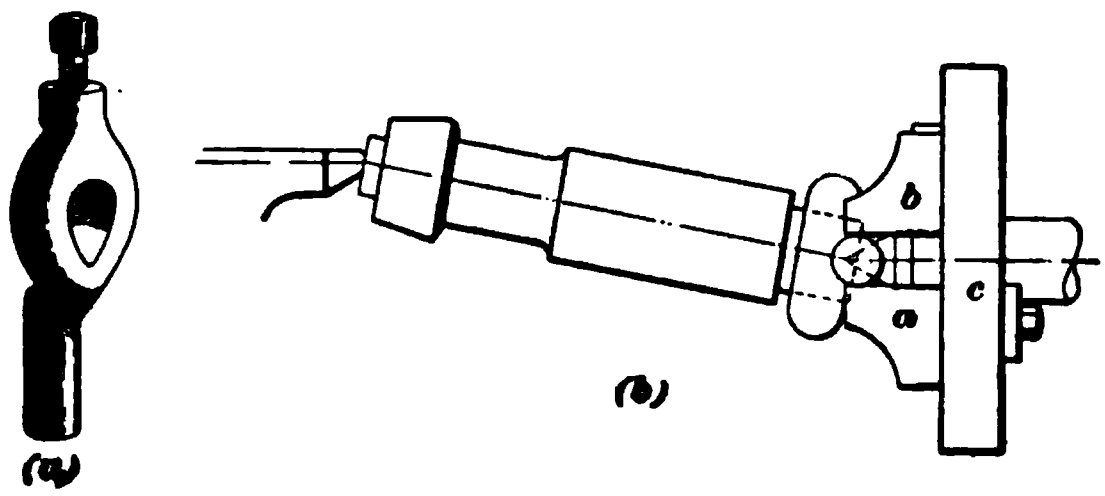

FIG. 27.

is seen that the dog has an offset cylindrical tail that is placed between the special jaws *a* and *b*, as shown in Fig. 27 (*b*). The jaw *a* is bolted to the face plate *c* and carries a small slide to which the movable jaw *b* is clamped. In use, the dog is placed on the work so that the axis of the tail is about flush with the end of the work. The tail is

now placed in contact with the fixed jaw *a*, and the movable jaw *b* is pushed against it and locked. Owing to the construction, the dog can rock freely during the revolution of the work and there is a complete absence of cramping or bending of the work. This kind of dog produces less error in dividing work than the bent-tail dog; it will not, however, as is commonly claimed, allow even divisions to be made while the centers are out of line.

87. Lining the Centers for Taper Work.—As previously stated, when even divisions are to be produced on work done between centers, it is absolutely necessary that the centers be in line; that is, the axes of rotation of the work and of the index-head spindle must coincide. The shifting of the centers to bring them into alinement is a matter that naturally depends on their construction and the conditions of each case, and no general direction that could be given would be of the same value as the exercise of a little judgment. Their correct alinement may be tested in various ways; one of the simplest and most accurate methods is here given, which has the advantage that it requires no special tools whatsoever, is rapid, and does not call for the exercise of any special skill.

88. Place the work *a*, Fig. 28, between the centers with a clamp dog mounted on it. Revolve it until the tail of the dog is on top and in the vertical plane passing through the axis of the work. Now adjust the dog until the end of the tail will just touch a feeling piece *b* placed between it and the driver *c*. This feeling piece may be a strip of tin, paper, brass, etc. Remove the feeling piece and give the index-head spindle one-half turn, thus bringing the spot on the driver that was opposite the end of the tail to the bottom. Revolve the work one-half

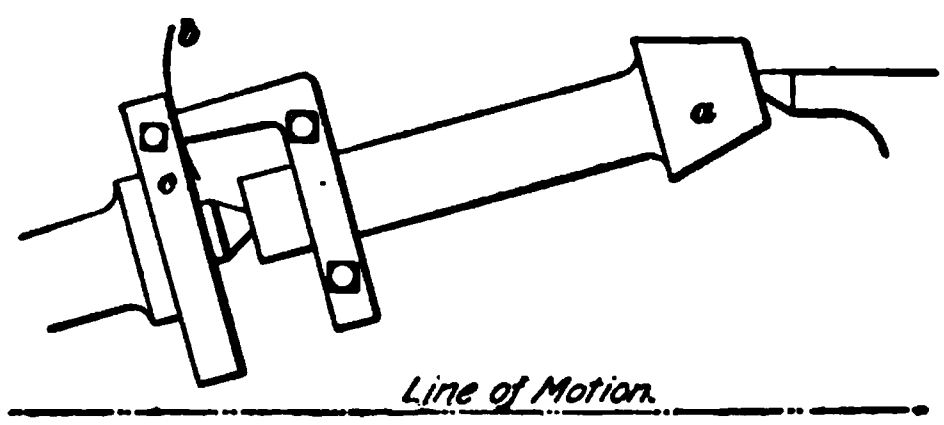

FIG. 28.

revolution and observe if the feeling piece will go between the driver and the dog. If it does not do so, the tailstock center is too low; if it enters freer than it did in the first position, the tailstock center is too high, and if it just goes in with the same degree of tightness that it did in the first position, the centers are in line in a vertical direction. To test their alinement sidewise, place the driver and dog into their two horizontal positions and apply the feeling piece in each position. If for any reason the work itself cannot be used, a mandrel of the same length as the work may be employed instead. In that case, the size of the centers in the mandrel must be the same as that of the centers of the work.

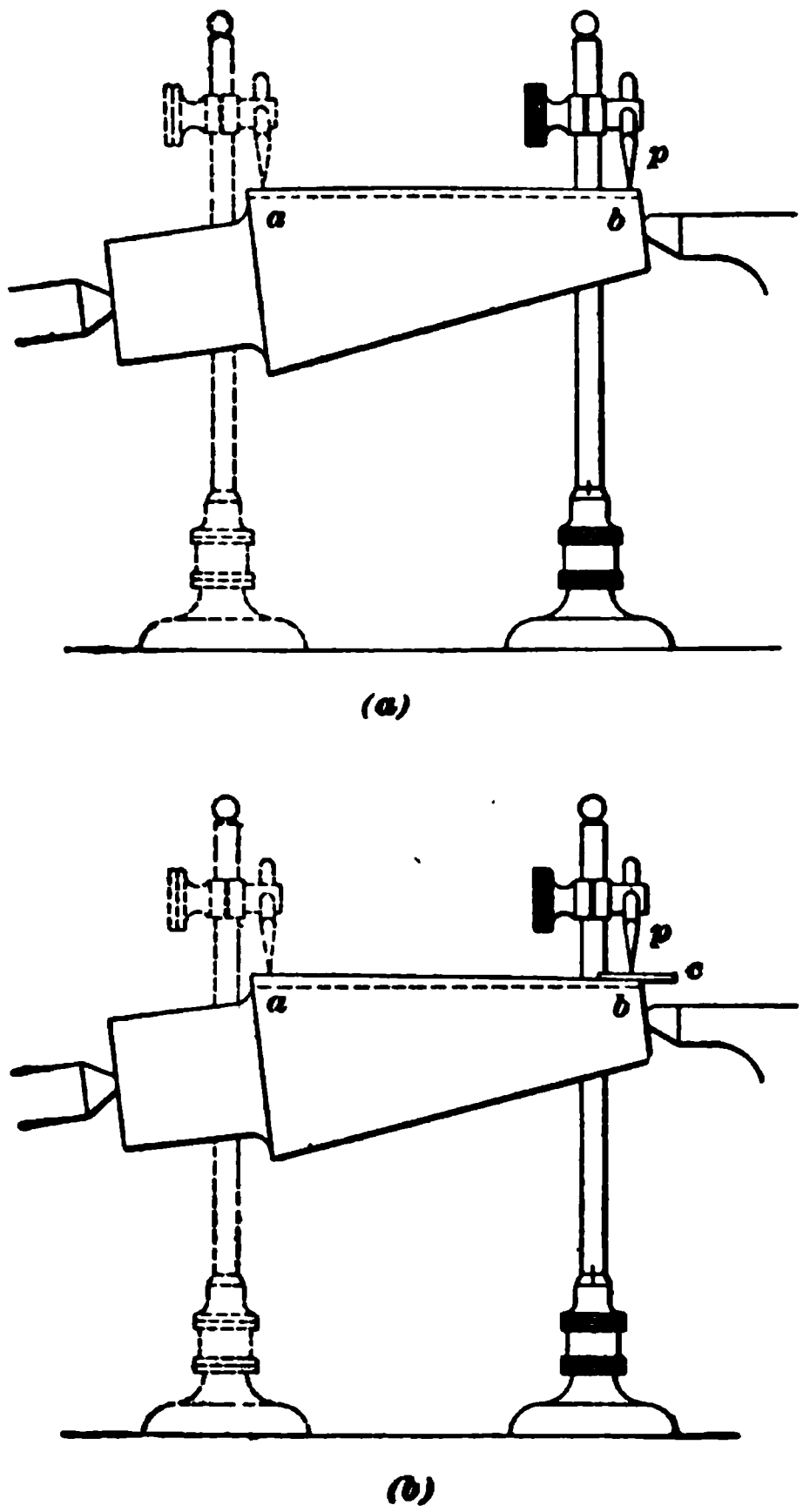

FIG. 29.

89. Setting Taper Work.— The cases that arise in practice in milling taper work between centers require the cut to be taken either parallel to the surface of the work or at an inclination to it. When setting the centers so that the cut, the depth of which is represented by the dotted line *a b* in Fig. 29 (*a*), will be parallel to the surface of the

work, a surface gauge may be employed for testing when using a horizontal milling machine and a plain cutter, or a vertical milling machine and an end mill.

90. The work having been placed between the centers, these are adjusted by eye until the top of the work appears about parallel to the surface of the milling-machine table. The pointer *p*, Fig. 29 (*a*), of a surface gauge is then adjusted to just touch the work at one end ; the gauge is now shifted to the other end, into the position shown in dotted lines, and it is noted if the pointer is again in contact with the work. If it does not touch, it shows that the work must be raised at the left end, or the right end must be depressed. After shifting, the testing is repeated until the surface gauge shows the work to be parallel to the line of motion.

91. When the cut is to be deeper on one end than at the other, as indicated by the dotted line *a b* in Fig. 29 (*b*), the setting may be tested by a surface gauge and an auxiliary test piece *c*. This test piece should be a very narrow strip of metal whose height is made equal to the difference in the depth of the cut at the two ends. Place the block on top of the work, holding it parallel to the table and set the pointer *p* of a surface gauge to touch it. Then shift the surface gauge to the other end and note whether the pointer touches the work. If it does touch, the work is correctly set; otherwise, it must be shifted and the testing repeated.

92. When using a plain cutter in a vertical machine, or an end mill in a horizontal machine, the surface gauge cannot be readily used for lining the work. In these cases, a pointer may be clamped to the spindle, or one of the cutting edges of the cutter itself may be used for testing the setting, traversing the work past the selected testing point by moving the table. In the case of a plain mill used in a horizontal machine, or an end mill used in a vertical machine, the setting may be tested by the cutter; but, as a general rule, it is more convenient to use a surface gauge in the manner explained.

93. On some classes of work, as, for instance, when a bevel gear is to be cut between centers, the angle that the cut makes with the axis of the work is given. With a universal head, raise the index head until the graduations indicate the given angle; now place the work between the centers and raise the tailstock until it is in line, testing by means of the method described in Art. **88.** When a special attachment like that shown in Fig. 26 is used, the testing is superfluous; all that is required is to set the index head to the given angle.

94. When the centers are to be set sidewise to a given angle, as occurs when using them in a horizontal machine

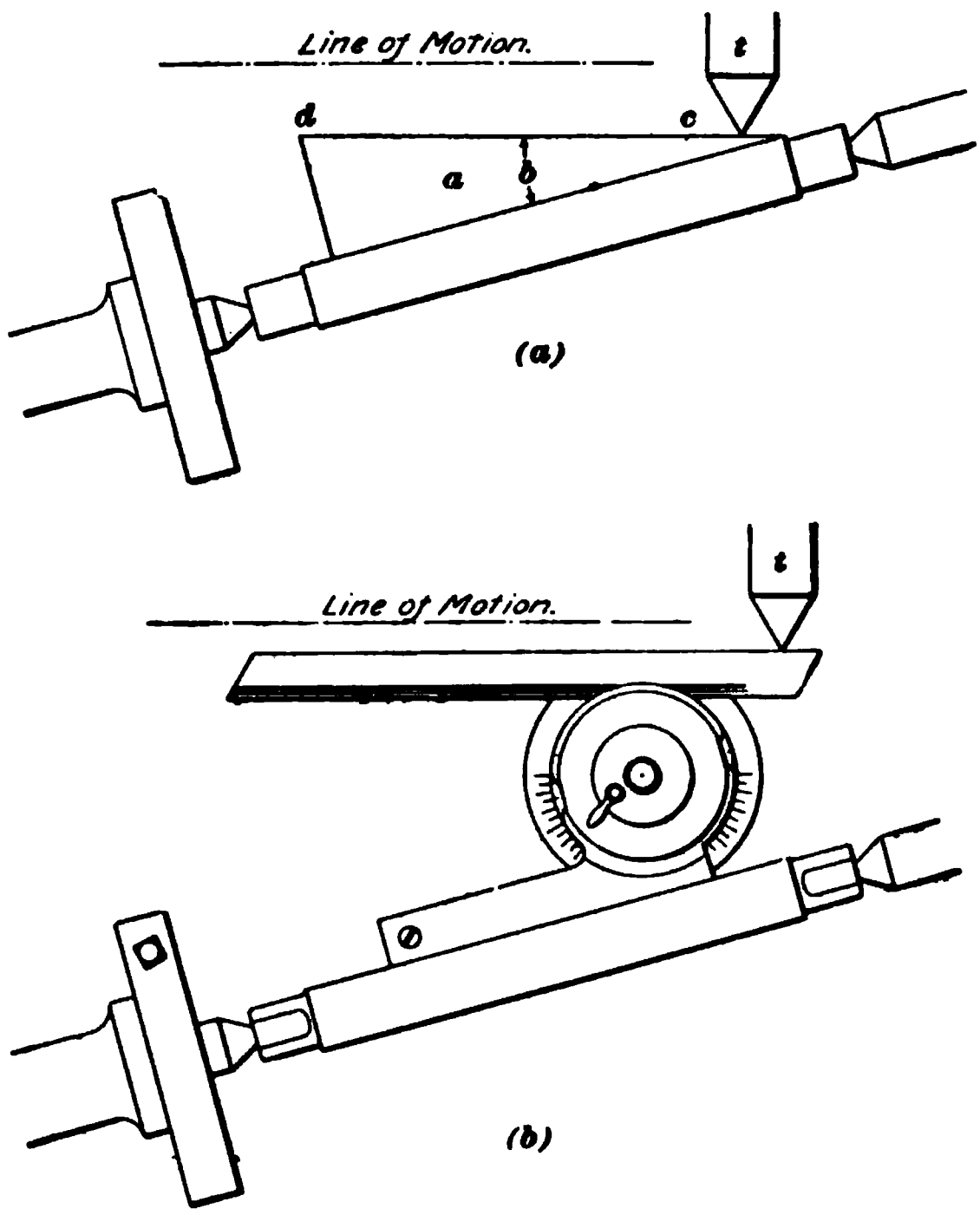

FIG. 80.

with an end mill, or a vertical machine with a plain mill, there are usually no graduations available by which to set

the centers. Various expedients may then be adopted. For instance, a piece of tin, as *a*, Fig. 30 (*a*), may be cut so that the angle *b* equals the given angle. This is then placed against a cylindrical mandrel held between the centers, which are now shifted until a traversing of the table past the stationary testing point *t* shows the side *c d* of the triangle *a* to be parallel to the line of motion of the table. The testing point may be a piece of wire clamped to the spindle.

95. When a bevel protractor of the type shown in Fig. 30 (*b*) is available, it may be set to the required angle and placed against a cylindrical mandrel held between the centers. Their setting may then be tested by traversing the table, and, hence, the blade of the bevel protractor, past a stationary testing point *t*.

96. When the two centers are mounted upon a bed, this bed will usually have some vertical surface that is parallel to a vertical plane passing through the centers. In that case the bevel protractor or the tin triangle may be applied to that surface, instead of to the mandrel, observing the necessary precaution of holding the instrument used parallel to the surface of the milling-machine table.

MILLING-MACHINE WORK.

(PART 3.)

USE OF MILLING MACHINE.

HOLDING AND STEADYING WORK.

HOLDING WORK IN A CHUCK.

1. Milling-Machine Chuck.—As a general rule, the chuck used in milling-machine work is a self-centering lathe chuck that is fitted to a face plate screwed to the index-head spindle. For holding small cylindrical work, a high-grade self-centering drill chuck of the Almond or Beach type may be fitted to a shank that fits the hole of the index-head spindle. Regular independent-jaw lathe chucks may be used for the index-head spindle; these have the advantage that work held in them can be trued up until its axis coincides with the axis of rotation of the spindle. It is rarely advisable, however, to fit an independent-jaw chuck to the index head unless the milling-machine spindle is threaded the same as the index-head spindle; the chuck can then be screwed to the milling-machine spindle and the work there trued up easily. After truing, the chuck is transferred to the index head. It is a very tedious job to true work in a chuck while on the index-head spindle, except in those machines which are provided with means for disengaging the worm and worm-wheel.

2. Self-centering drill chucks, if of a high grade and carefully fitted, can be relied on to hold work within their

For notice of copyright, see page immediately following the title page.

capacity very true; they will also stay true for a long time if used with a reasonable amount of care. Self-centering lathe chucks, even though made with the greatest of care, will rarely hold work so that its axis coincides with the axis of rotation; in spite of careful use, they will soon wear still further out of true. For this reason, it is not advisable to use a self-centering lathe chuck for work that requires cuts to be very true in respect to its axis; when this is considered essential, the work should be trued up in some other manner, as, for instance, by clamping it to a true-running arbor or similar device.

3. Examples of Chuck Work.—There is a great variety of work that can advantageously be done with the piece held in a chuck, among which may be mentioned the milling of squares on the ends of taps and reamers, the cutting of axial grooves on work too long to go between the centers but small enough to pass through the index-head spindle, milling out the spaces of spring dies and hollow mills, and similar work. A few examples are here given, which will act as suggestions as to the class of work and the kind of cuts for which the chuck is adapted.

4. Grooving Work Held in Chuck.—Fig. 1 is a front view, looking in the direction of the line of motion of the table, of one style of an index head, which carries the three-jawed chuck *a*, in which the work *b* is held. A straight groove having a rectangular cross-section is to be milled in the work to take a feather; in other words, the work, which may be assumed to be a shaft, is to be splined for a part of its length. When the groove is to terminate in the manner shown in Fig. 2 (*a*), an end mill *c* would have to be used, as

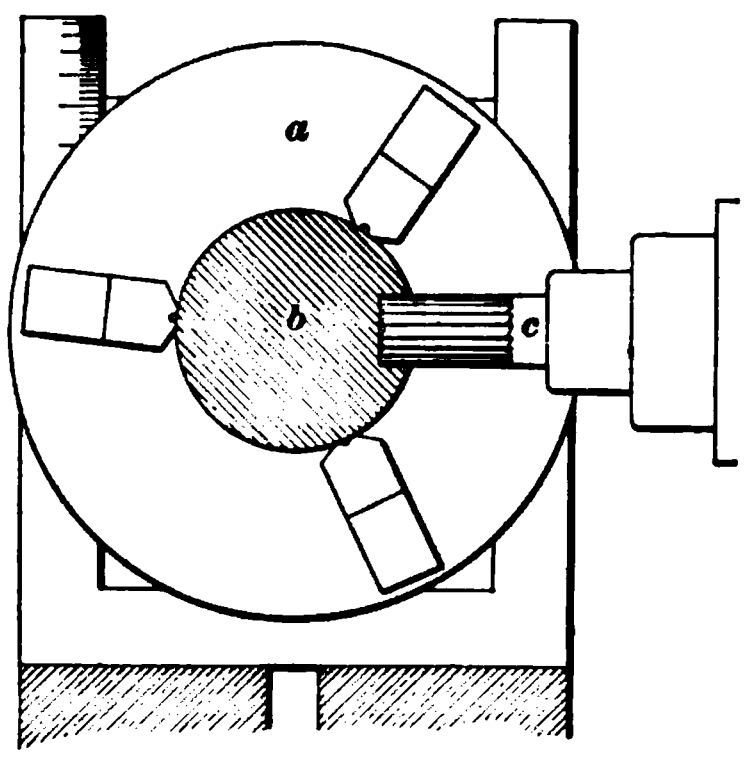

FIG. 1.

shown in Fig. 1. When such a groove is to begin at some distance from the end, a hole slightly smaller than the finished width of the groove should be drilled where the groove is to start; this hole should have the same depth as the groove, and will make it easier to sink the end mill into the metal. Some workmen prefer to drill a hole where the groove is to terminate, but there is no particular advantage to be derived from this practice. If it is done, it is recommended to drill this hole considerably smaller than the width of the groove, in order to allow the end mill to finish the groove nicely.

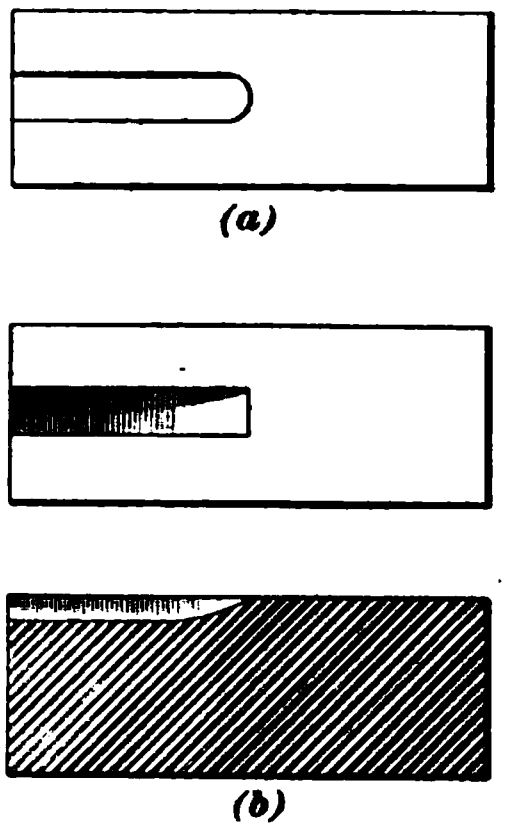

FIG. 2.

5. When the character of the work demands that the groove terminate in the manner shown in the top view and longitudinal section in Fig. 2 (*b*), a plain cutter must be selected. In that case (for a horizontal milling machine), the cut would be taken on top of the work, as shown in Fig. 3. When a groove like that shown in Fig. 2 (*b*) does not begin at the end, it can be easily cut by dropping the cutter into the work; no hole need be drilled and no chipping out is required, as the plain cutter will easily clear itself of chips.

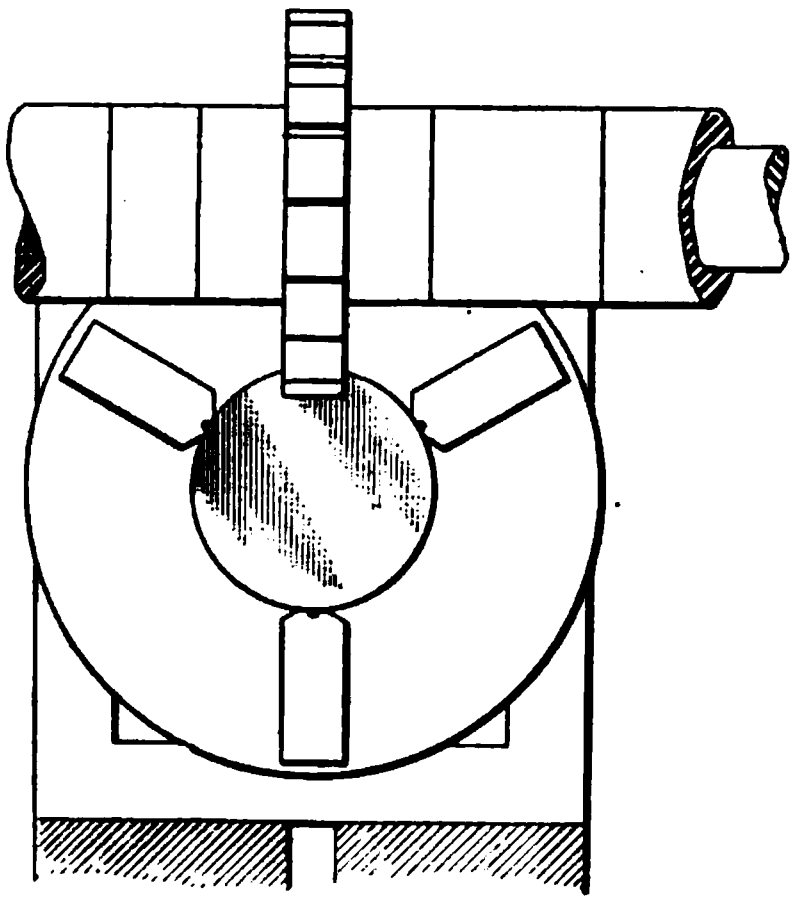
FIG. 3.

6. Milling Polygons.—When milling a square, or any other polygon, on the end of round work held in the chuck, the way in which the cut is to terminate will determine the

kind of cutter to be used and the direction of the feed. For instance, when a horizontal machine and a plain cutter are used, with a direction of feed as indicated by the arrow x in Fig. 4 (*a*), the cut must be taken over the top of the work, and will terminate in a curved shoulder having a radius of curvature equal to the radius of the cutter. For some work, this may be a decided advantage, as, for instance, when milling a punch, since this way of terminating the cut will leave the punch very strong and greatly reduce its liability to crack in hardening; for other work, again, it may be a decided disadvantage. Thus, assume that the square at the end of a tap was cut in the manner illustrated in Fig. 4 (*a*). Then, the tap wrench will jam on the curved shoulders and become difficult to remove. In this case, it is better to terminate each flat with a shoulder; this may be done by using an end mill or a side mill, feeding in the direction of the arrow x in Fig. 4 (*b*).

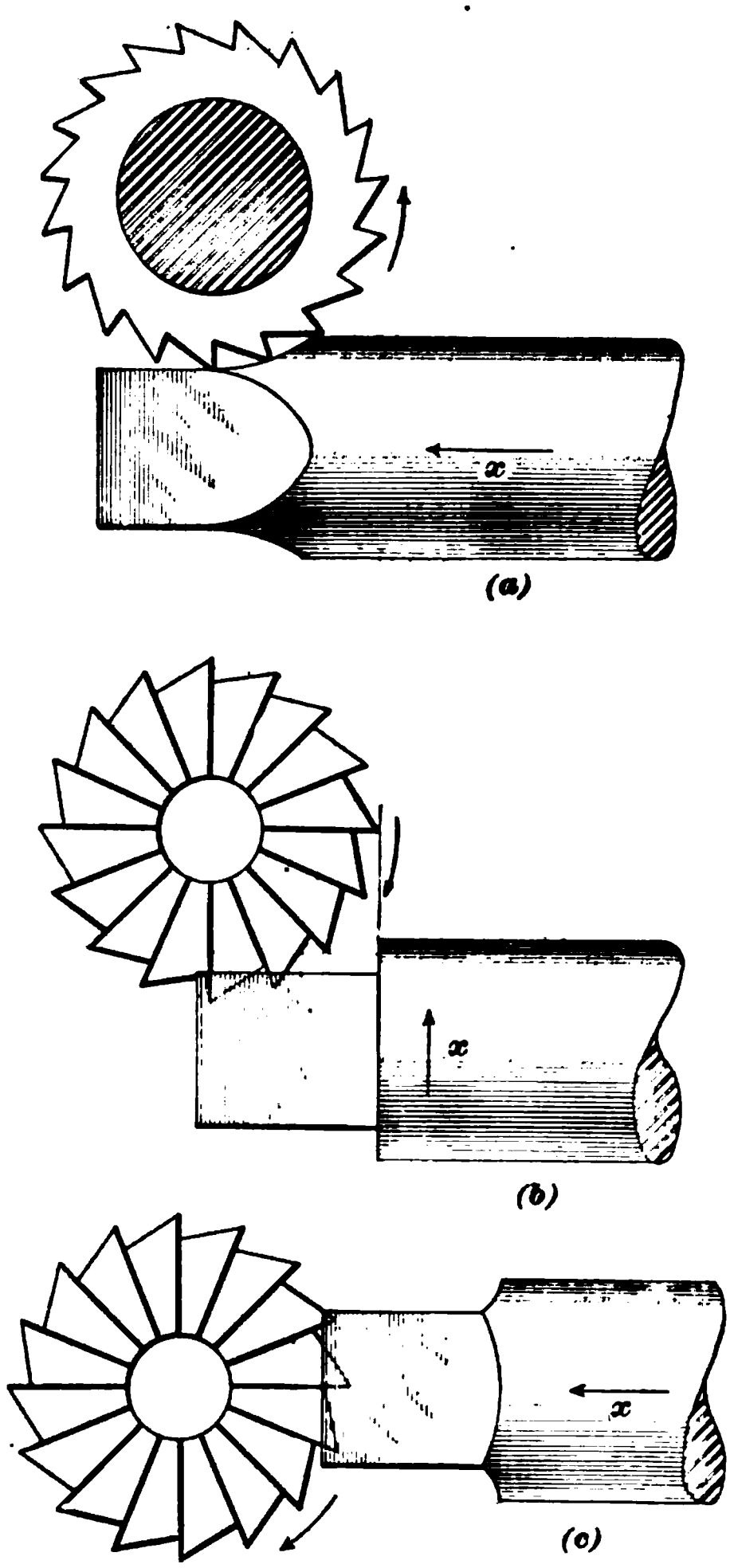

FIG. 4.

7. When conditions permit a cut to terminate in a shoulder curved as shown in Fig. 4 (*c*), the milling may be done with an end mill, a side mill, or a pair of side mills used as straddle mills, feeding in the direction of the arrow *x*. In that case, the axis of the work should intersect the axis of rotation of the cutter. Comparing squares and cutters of equal size, it will be found that a square made as in Fig. 4 (*c*) can be finished in a fraction of the time that is required for finishing it in the manner shown in Fig. 4 (*b*). The reason is to be found in the difference in the distances the cutter has to travel in order to complete the cut; the distance to be traveled by the cutter is least when milling as shown in Fig. 4 (*c*).

8. **Circular Chuck Work.**—Fig. 5 is a suggestion of what may be done in the way of circular milling, using in this case a horizontal machine and an end mill. The work is shown to an enlarged scale in Fig. 5 (*a*); it is required to finish the curved surface *a*, and also the rest of the face. This may be done by holding the stem *b* of the work in the chuck and using an end mill, as shown in Fig. 5 (*b*). For finishing the curved surface, the axes of rotation of the cutter and of the work should not intersect, but the axis of the cutter should be below the axis of the work a distance at least equal to the radius of the central hole in which the

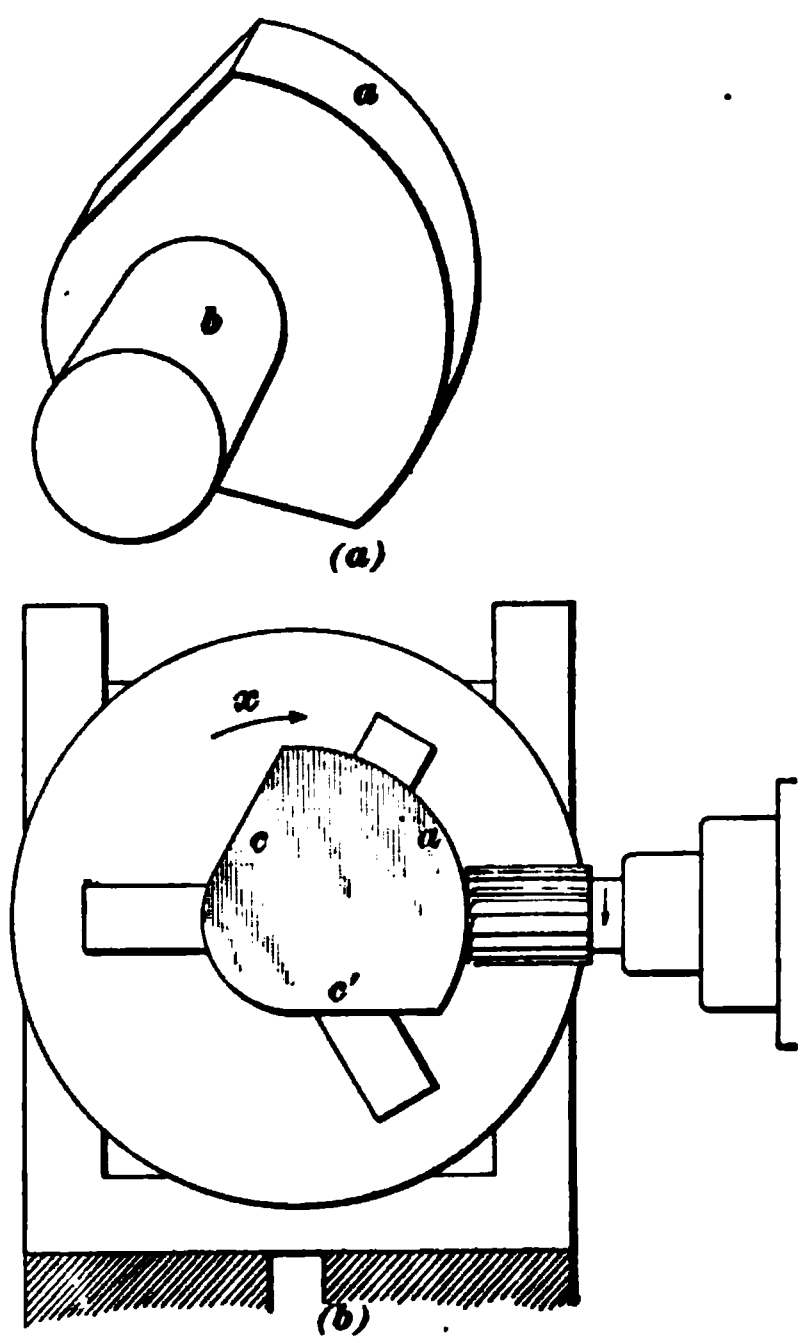

FIG. 5.

teeth of an end mill terminate. When cutting the curved surface *a* of the work, the feeding is done by rotating the index-head spindle in the direction of the arrow *x*. As soon as the cutter has passed clear over the curved surface, the knee of the milling machine is raised; the work is then rotated until the face *c* is vertical.

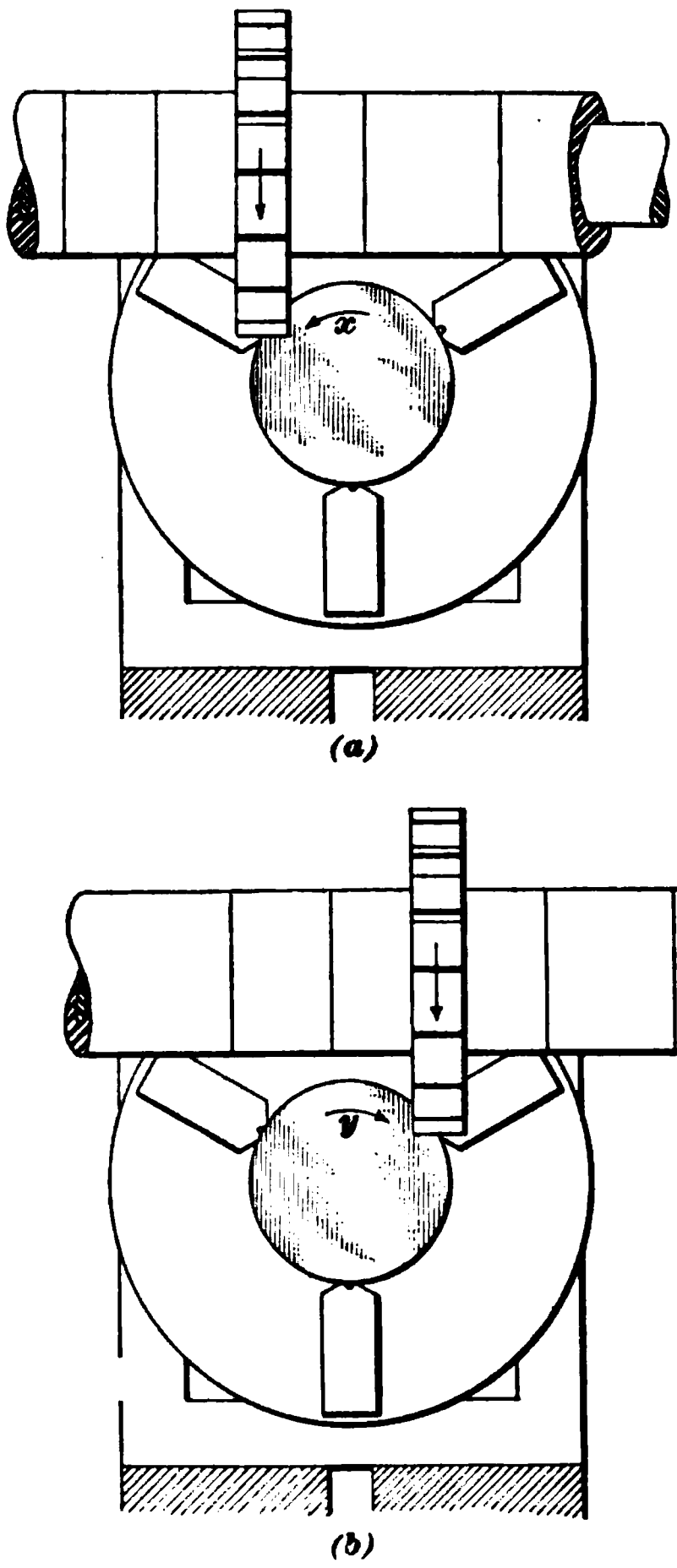

FIG. 6.

By means of the cross-feed screw, the table is fed toward the cutter until the required depth of cut is reached; the feeding is then done by lowering the knee until the curved part of the work is reached. The index-head spindle is now slowly rotated in the direction of the arrow *x* until the side *c'* comes vertical; the knee is then fed upwards until the cutter has passed over *c'*, which completes the milling of the work.

The method of finishing the piece shown in Fig. 5 (*a*) that has just been explained is not given as the only way in which this job can be done, nor is it claimed to be the best way. It is given merely for the purpose of suggesting

to the operator the character of work that may be done in this manner.

9. Precautions.—When cuts are to be taken at one side of the center on work held in the chuck, it should always be the aim to select the cutter or arrange the machine so that the pressure of the cut will not unscrew the chuck from the spindle.

Suppose a cut is taken as shown in Fig. 6 (*a*), and that the chuck is screwed on with a right-hand thread. Then, the pressure of the cut will tend to rotate the chuck in the direction of the arrow *x*, that is, left-handed; this will unscrew the chuck. For making the cut, the cutter should occupy the position shown in Fig. 6 (*b*); the pressure of the cut will then tend to rotate the chuck in the direction of the arrow *y*, and thus tend to screw it home more firmly.

10. It is not always possible to select the cutter or arrange the machine so that the pressure of the cut will not tend to unscrew the chuck. A good example of this is the hollow mill shown in Fig. 7, which is extensively used in turret-lathe and screw-machine work. Such mills, as a general rule, cut right-handed, the term *right-handed* being

FIG. 7.

applied to this mill in accordance with the practice existing in regard to milling cutters. It can readily be seen that in milling out a hollow mill in order to form the cutting edges, the cut must be taken to the left of the center, or as in Fig. 6 (*a*). Now, if the chuck is screwed on with a right-handed thread, there is a tendency to unscrew the chuck,

which is quite pronounced on account of the width and depth of the cut. For this reason, special care is required to jam the chuck firmly against the shoulder on the index-head spindle, when the thread is right-handed, and great care must also be exercised when taking the cut. It sometimes is possible to block the chuck by putting a jack under one of the jaws, and this should be done whenever circumstances permit. When a chuck that is fitted to the index-head spindle by a shank is available, and is of sufficient size, it should be used in preference to a screwed chuck.

11. Angular Cuts.—Cuts may be made at an angle to the axis of work held in the chuck by inclining the universal head, as shown in Fig. 8. A great variety of work can thus be done, as, for instance, milling the teeth on the end of end mills, or the teeth on the sides of solid side mills, milling bevel gears, etc. Some varieties of work can advantageously be held in the chuck, while others can be done more readily and accurately by using some other holding device, as an arbor, for instance.

FIG. 8.

12. In order that the chuck jaws may not cut into the surface of finished work, strips of soft copper, brass, or sheet tin may be placed between the jaws and the work. When using the chuck, the work should project as little as circumstances permit, both in order to get a fair bearing of the jaws and also to reduce the spring of the work during the cutting operation.

ARBORS FOR INDEX-HEAD USE.

13. Milling-Machine Arbor.—Arbors that are to be used in the index head may be made in many different ways to suit the nature of the job. For holding saw blanks, face

cutters, solid side cutters, and other similar cutting tools for the milling machine while milling the teeth in them, a regular milling-machine arbor can often be used to advantage.

On many jobs, such an arbor cannot be used very readily on account of its being in the way of the milling cutter; in such a case, some other design of arbor must be adopted. In designing such a special arbor, the nature of the job will largely determine its shape, and will usually narrow the choice down to a very limited range of designs. Several special designs are here given as suggestions of what may be done.

14. Expanding Arbors.—Fig. 9 (*a*) is one design of a special arbor intended for holding work with a central hole

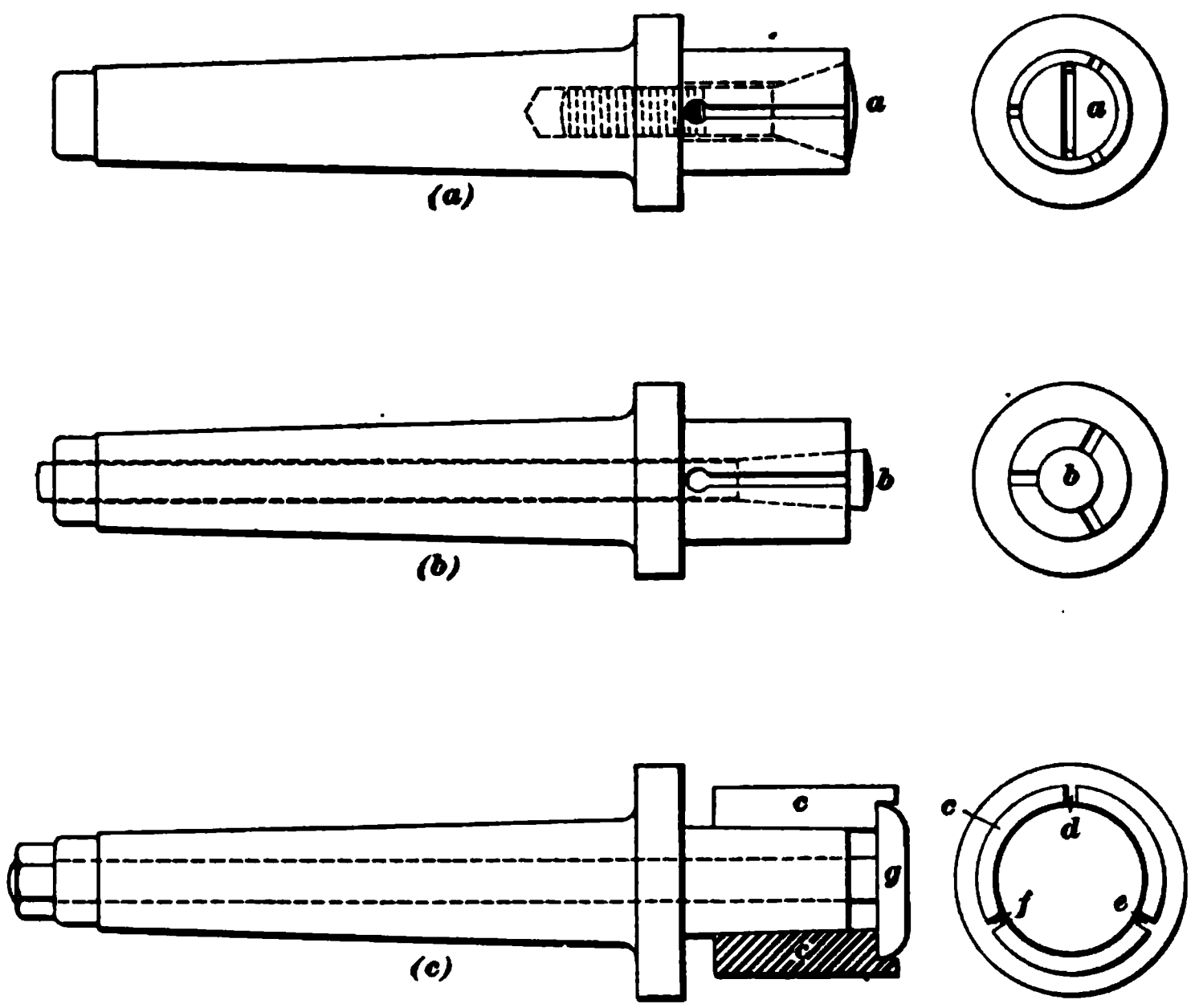

FIG. 9.

in such a manner as to allow it to be milled on the side; as, for instance, a small side milling cutter, or a bevel gear.

The front end of the arbor is split into three or more parts by slots terminating in holes close to the shoulder. A screw with a tapering head will expand the split end so as to hold the work, which is slipped on the arbor before the screw is tightened. The split end of the arbor must be a fair fit in the hole of the work before expanding. The arbor shown will hold the work central, and is cheap in first cost. Its disadvantages are that it can be used for only one size of hole, and that it will not hold the work as firmly as some other designs.

15. Fig. 9 (*b*) shows a design intended to overcome one of the disadvantages of the arbor just shown. The end is split into three or more parts and is made to fit the hole of the work; a central hole is drilled clear through the arbor and is reamed out tapering at the front end. A taper pin *b* is fitted to it, and is driven in to expand the arbor. To loosen the work, the pin is driven out. This may be done with a rod and hammer; the rod may be dispensed with if the taper pin is made with a long, straight shank extending beyond the end of the index-head spindle, as is shown in the illustration. If the split end before expanding is a fair fit in the hole of the work, it will hold the latter central and also very firmly, since a greater pressure, and hence more friction, can be created by driving the taper pin home than it is possible to obtain by tightening a conical-headed screw with a screwdriver. This design is perhaps slightly more expensive than the previous one, but it is to be preferred because it holds the work more firmly. It retains the disadvantage of being adapted for but one size of hole.

16. Bushed Expanding Arbor.—A design that can easily be adapted to various sizes of holes at a comparatively slight expense is shown in Fig. 9 (*c*). Here the front end of the arbor is tapered slightly, so that the included angle is, say, from 2° to 3°. A bushing *c* is bored to fit the tapered end of the arbor, and is turned outside to fit the hole of the work. It is split by an axial slot *d*; in order to allow it to expand easily, several slots, as *e* and *f*, may be cut around its

circumference. The bushing may be expanded by a bolt *g* extending clear through the arbor and having a nut at the rear end, or it may be locked by simply driving it home. In order to adapt the arbor to a different size of hole, a new bushing is the only thing required. The arbor shown must be removed from the index-head spindle to change the work, since the work can only be removed from the arbor by driving it off. A nut may be placed back of the bushing so that the work can be forced off without removing the arbor.

17. Chuck Arbor.—Fig. 10 is a design of arbor that would, perhaps, more properly be called a chuck, since it is used to hold work with a cylindrical part. The front end of the arbor is bored out to fit the work closely; its outside is turned tapering and threaded at the rear. It is split into three or more parts (four in this case) and has a sleeve nut *a* fitted to it. This sleeve nut has holes, as *b*, *b*, drilled

FIG. 10.

in it to take the pin of a spanner wrench. The work, as, for instance, the bevel-gear blank *c*, is placed in the arbor and the nut *a* is screwed home with a spanner wrench; this causes the split end to hold the work centrally and grip it quite firmly. In order to hold the work securely, it is necessary that the cylindrical part of the work is a fair fit in the hole of the arbor.

The arbor shown can be adapted to a limited range of sizes by fitting concentric split bushings to it; it cannot be expected in that case to grip the work as firmly as it does when no adapting bushing is used.

HOLDING WORK ON FACE PLATE.

18. Use of Face Plate.—For many jobs, it is possible to use a face plate for holding the work. When the index-head spindle is threaded, the face plate can be screwed to it; when this is not the case, it may be fitted to a shank fitting the hole of the index-head spindle. If this is done, it is not advisable to use a thread for uniting the shank and face plate on account of the danger of unscrewing the face plate, unless a round key is sunk half into the shank and half into the face plate. When a face plate is screwed to the index-head spindle, the same precaution must be taken as in case of a chuck fastened by screwing; that is, whenever circumstances permit, the cut should be taken in such a manner that there will be no tendency to unscrew the face plate.

19. Work is fastened to a face plate and is trued up in the same manner as in lathe work; it must always be remembered, however, that the pressure of the cut is much greater than in lathe work, and hence the clamping must be done very carefully. If circumstances permit, stop-pins may be inserted in the face plate to prevent slipping of the work, or stops may be bolted to it.

20. Lining the Face Plate.—Most of the face-plate work done in a milling machine requires the plane of the face plate to be at right angles to the axis of rotation of the milling-machine spindle. The setting may then be tested in the following manner: Place the index-head spindle about in line with the milling-machine spindle, as is shown in Fig. 11. No particular degree of accuracy is required for this; it will be good enough for the purpose if this is done as nearly as can be judged by the eye. Fasten a bent piece of wire, as *a*, to the milling-machine spindle in any convenient manner; by moving the table, bring the pointed end in contact with the face plate, or, if desired, with a feeling piece *b* placed against the face plate. Revolve the milling-machine spindle one-half of a revolution, thus bringing the point of the wire into the position shown in dotted

lines, and test the distance between the end of the wire and the face plate. If it is greater than in the first position, the index-head spindle requires shifting in the direction of the arrow x; if it is less, the shifting must be done in the direction of the arrow y. Test next in two positions at right

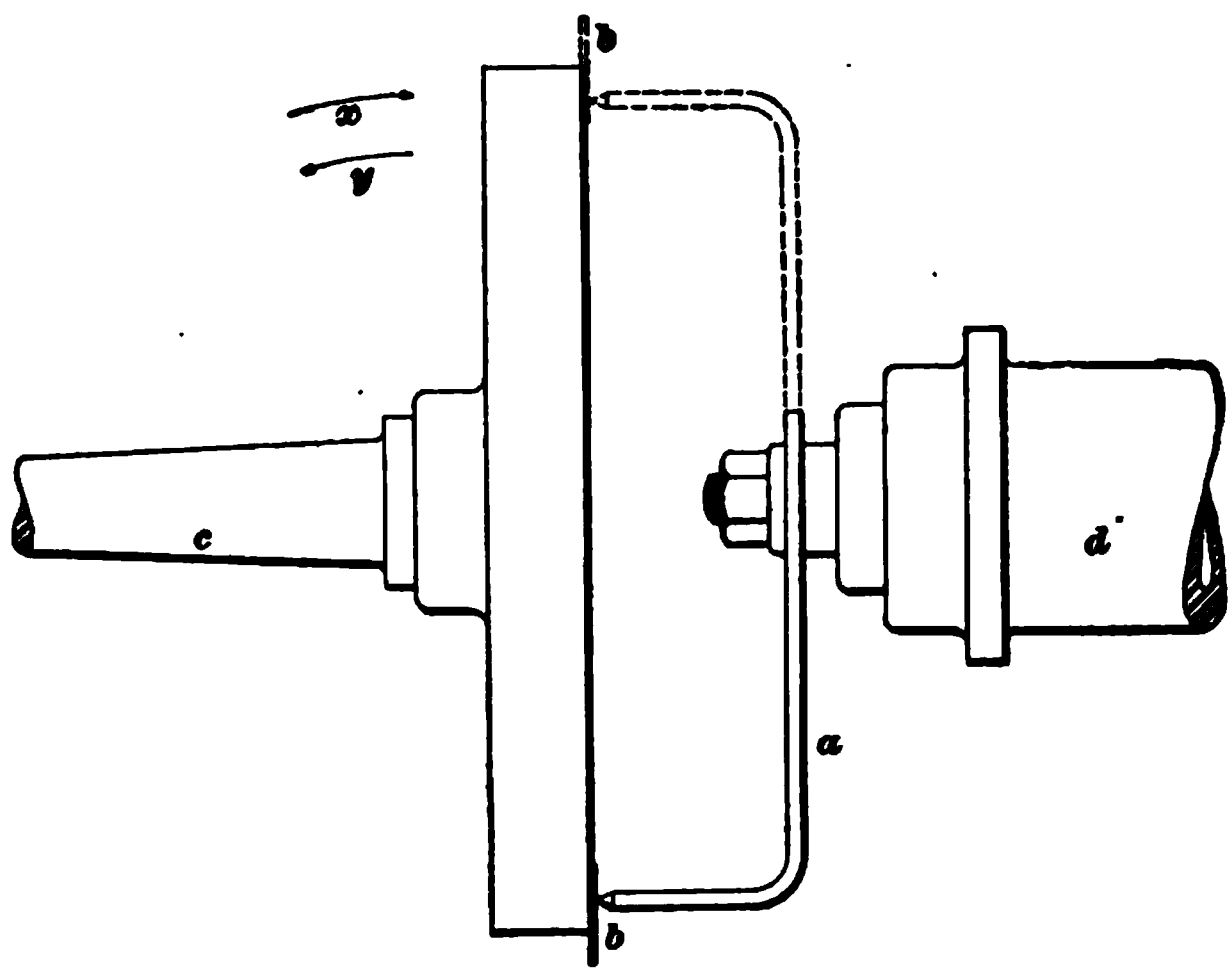

FIG. 11.

angles to those shown in the illustration, and shift the index-head spindle until the end of the wire remains at a constant distance from the face plate during a complete revolution of the milling-machine spindle. The wire used for testing should be quite stiff, say about $\frac{1}{4}$ inch in diameter.

21. Example of Face-Plate Work.—Fig. 12 is an example of circular milling that may be done with the work clamped to the face plate. Here the two slots a and b are circular; the slot a has its center of curvature at a' and the slot b at b', while the center of the work is at c. In order to mill the slots, the work must be set so that for the slot a, the point a' will coincide with the axis of rotation of the index-head spindle; for the slot b, the point b'

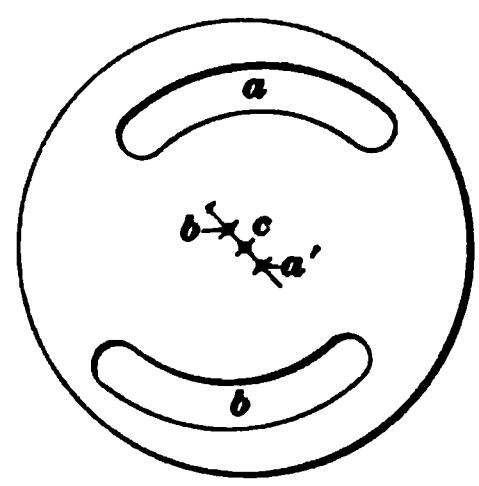

FIG. 12.

must coincide with the axis just mentioned. Fine center-punch marks may be made at these points; the work can then be trued up either with the face plate mounted on the milling-machine spindle or temporarily mounted in any suitable lathe that is available. The slots should be milled with an end mill; the feeding is then done by rotating the index-head spindle, and, hence, the face plate.

HOLDING WORK IN JIGS.

22. Purpose of Jigs.—When a great number of equal pieces are to be finished by milling, and especially when their form is such that they cannot be readily held in the vise or on the table in a simple and efficient manner, they can often be held to advantage in special holding devices called **milling jigs.**

A properly constructed milling jig should serve simultaneously for two different purposes in order to warrant the expense of constructing it. In the first place, it must hold the work securely without distorting it, leaving the surfaces to be machined exposed to the cutter; in the second place, the act of clamping must automatically aline the work properly for the subsequent cutting operation.

Milling jigs may be constructed in a great variety of ways to suit the nature of the work, and no specific rules can be given as to how they can best be constructed. A number of actual examples are here given; these examples will serve as suggestions of what may be done.

23. Splining Jig.—Fig. 13 shows a jig designed for holding shafts for key-seating or splining, plain cutters being used for the purpose; it is intended for milling two shafts simultaneously, as a general rule, but, as will become apparent when its construction is studied, it can be used for machining one shaft at a time. Referring to the illustration, a false table *a* is bolted to the milling-machine table. This false table has two parallel V grooves milled in it throughout its length; these grooves are parallel to the line

of motion of the milling-machine table. The shafts *b*, *b*, which are to be splined or key-seated, are laid into these grooves and are clamped by means of the clamps *c*, *c*, and *d*. It is thus seen that each shaft is held by two clamps at each clamping point. Owing to the way in which the clamps must be applied in order to be clear of the milling cutters *e*, *e*, one clamp would fail to insure a rigid holding of the

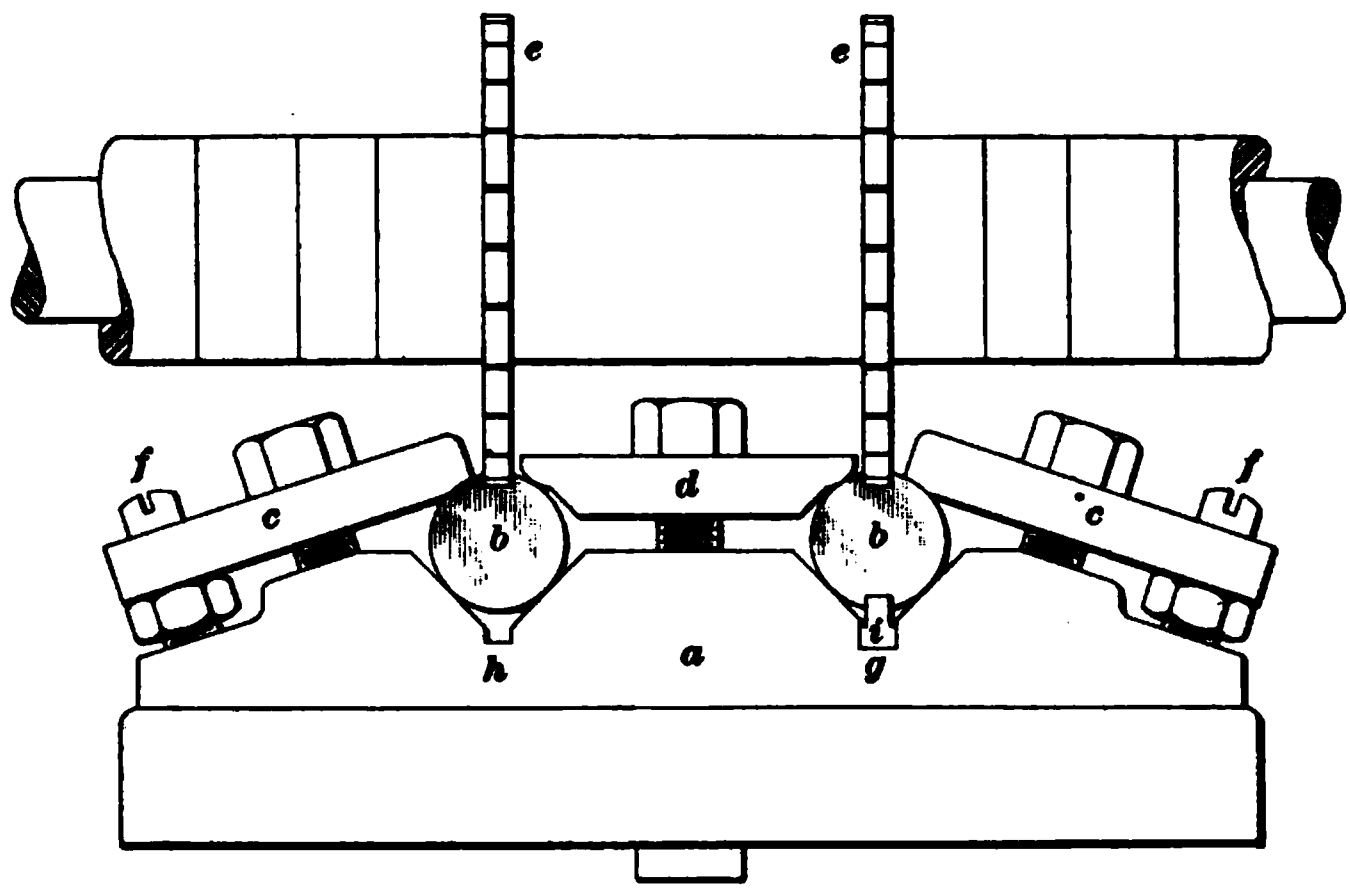

FIG. 13.

work, since it would not press the work with an equal pressure against both sides of the V groove. This inequality of pressure is corrected by applying a second clamp opposite the first. The jig is adapted for different sizes of shafts by making the blocking for the clamps *c*, *c* adjustable for height. The blocking consists of studs *f*, *f* with nuts screwed on them; the clamps *c*, *c* have clearance holes in them for the studs to pass through, and rest on the nuts, which are screwed up or down to suit different diameters of work.

24. The design shown is so constructed that shafts may be automatically lined up so as to have two keyways, or splines, cut diametrically opposite each other; the design can readily be modified to cut the keyways at any predetermined

angle with each other. For the purpose of insuring a correct location of the second keyway, a rectangular groove, as *g* or *h*, is cut in the false table; a block *i*, with a tongue that fits the key seat, or spline, previously cut, is placed into the groove and the work is then placed on top with the key seat, or spline, engaging the tongue of the block.

25. Special Jig.—Fig. 14 (*a*) shows a machine part that is to have a dovetailed groove *a* cut into the bottom in line with the axis of the two holes bored through the standards *b*, *b*. Owing to the shape of the work, it is rather difficult to hold it properly for machining, and it will become a

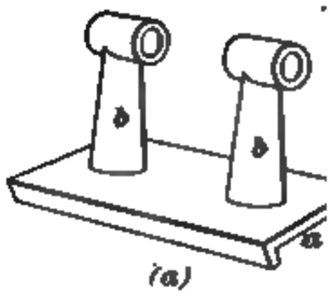

FIG. 14.

rather expensive job if a number of such castings are to be finished. The work may, however, be securely held, quickly set, and automatically lined up by the use of the jig shown in Fig. 14 (*b*).

This jig consists of a body *c* that is bolted to the milling-machine table. It has three brackets with V grooves milled in the top of them in line with the line of motion of the table. A cylindrical mandrel is passed through the holes in the standards of the work; this mandrel is then laid into the V grooves and clamped by means of the bolts and clamps shown. The free end of the work is lined up for height by means of the jack-screws *d* and *e*, and is finally confined by the clamp *f*.

26. Gib Jig.—Fig. 15 shows a jig designed for holding gibs to allow the angle on the edges to be finished with an end mill. The jig consists of a body *a*, which is bolted to

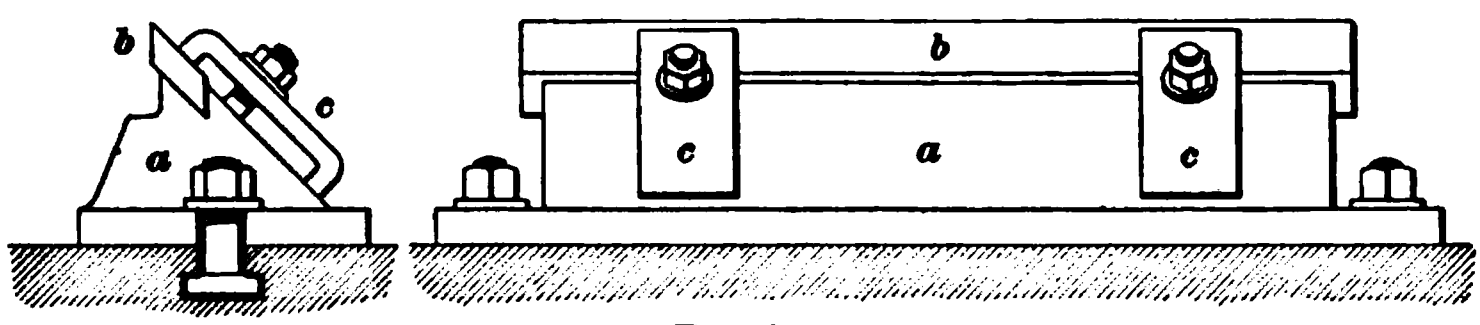

FIG. 15.

the table. The upper edge of the body is recessed to hold the gib *b* at the proper angle; two clamps *c*, *c* are used for holding the gib to the jig.

27. Multiple Jigs.—A number of pieces may occasionally be held at once in a jig in order to have some simple

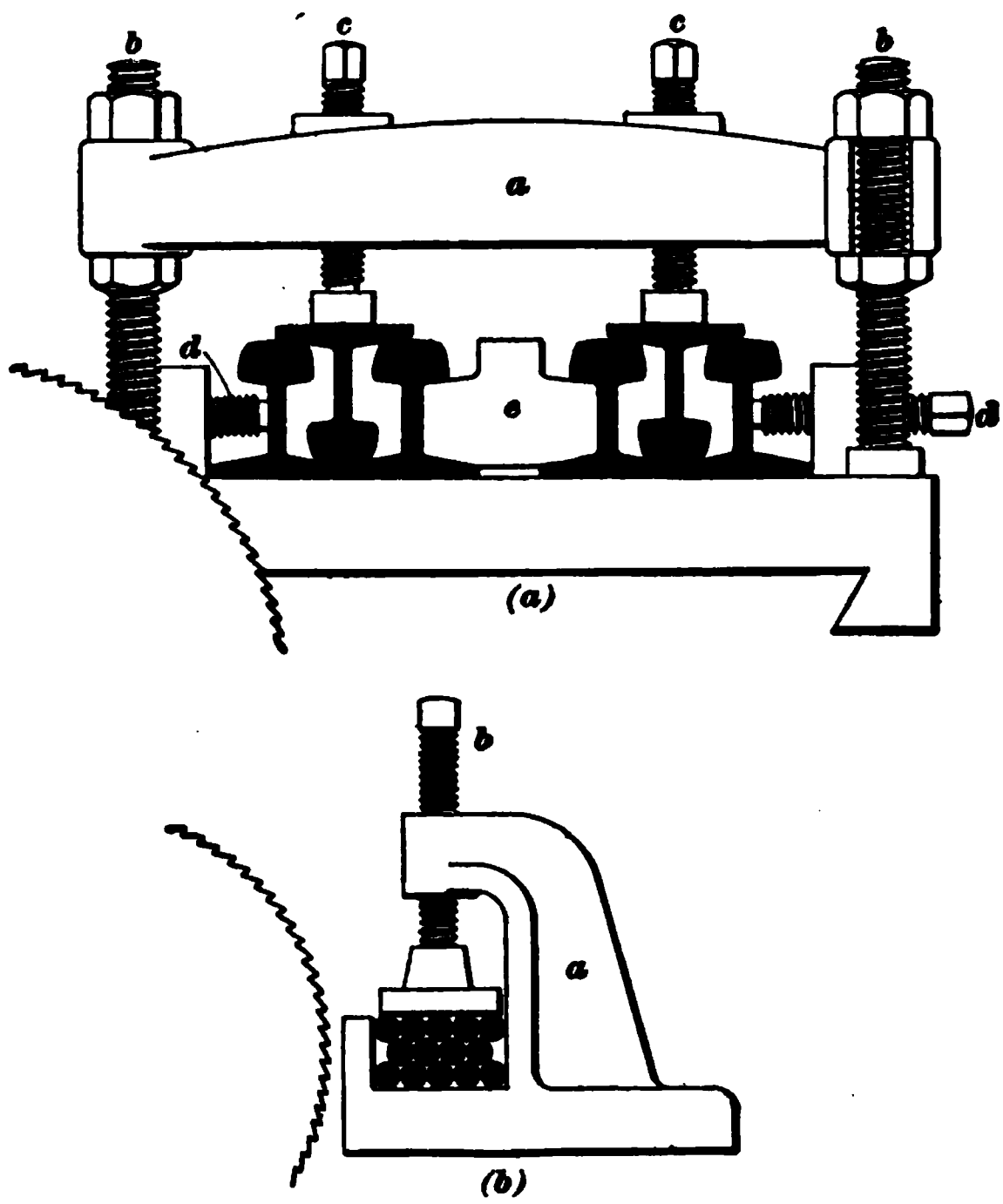

FIG. 16.

milling operation performed on them, as, for instance, the

squaring up of the ends of rails, as shown in Fig. 16 (*a*), or the squaring up of the ends of round work, as shown in Fig. 16 (*b*). In the first case, a yoke *a* is bolted to the table of the milling machine by means of the studs *b*, *b*. This yoke carries the setscrews *c*, *c*. The rails are confined sidewise by the setscrews *d*, *d*, which push each set of rails against the central packing-block *e*.

28. In Fig. 16 (*b*), a bracket *a* is bolted to the table of a milling machine; the bottom of the bracket has a rectangular opening in which the rods are placed and then confined by tightening the setscrew *b*. The act of tightening the setscrew causes the round rods to spread so that the outer ones come in contact with the sides of the opening; since each rod is in contact with at least two others, they will all be held firmly.

USE OF THE STEADY REST.

29. Purpose and Application.—As implied by the name, the **steady rest** used in milling-machine work is used for supporting slender work against the pressure of the cutting operation. Steady rests may be made in quite a

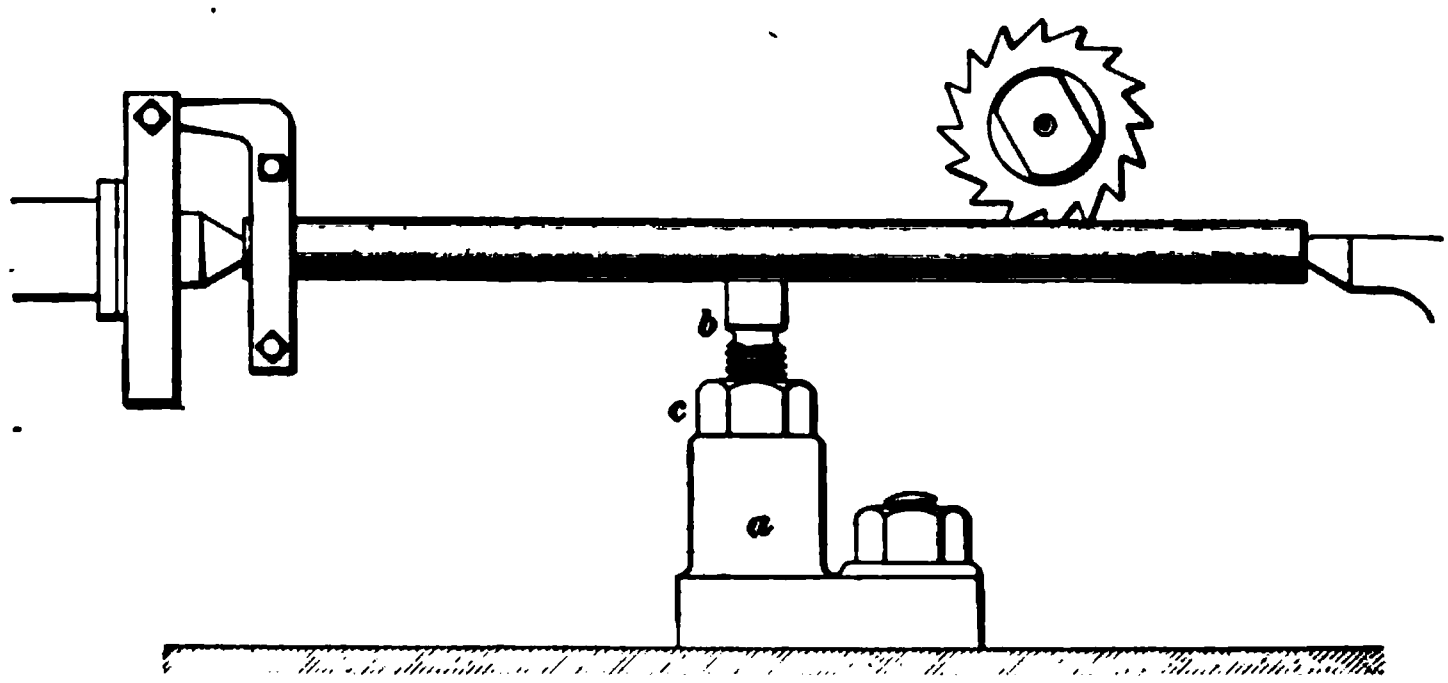

FIG. 17.

number of ways to suit special jobs; Fig. 17 shows one form and incidentally gives its application to work held between the centers. The steady rest has a base *a*, which is bolted to the milling-machine table in a position about midway

between the ends of the work. A flat-ended setscrew *b*, having a check-nut *c*, is screwed into the top of the base, and is adjusted by turning until it is just in contact with the bottom of the work. The check-nut is then set up in order to lock the setscrew.

30. Supporting Work Sidewise.—A flat-ended setscrew will support the work in a vertical plane, but will not support it sidewise. For some classes of work, as, for instance, when fluting small taps held in a chuck, it is a decided advantage to support the work sidewise as well, since, in that case, the cut develops a sidewise bending action. For this purpose, the steady rest may be made with a setscrew having a V groove cut into its end, as shown in Fig. 18. Such a setscrew should not be screwed into the base, but should closely fit a cylindrical hole reamed in it; a nut *c*, applied as shown in Fig. 17, is then used for bringing the setscrew in contact with the work.

FIG. 18.

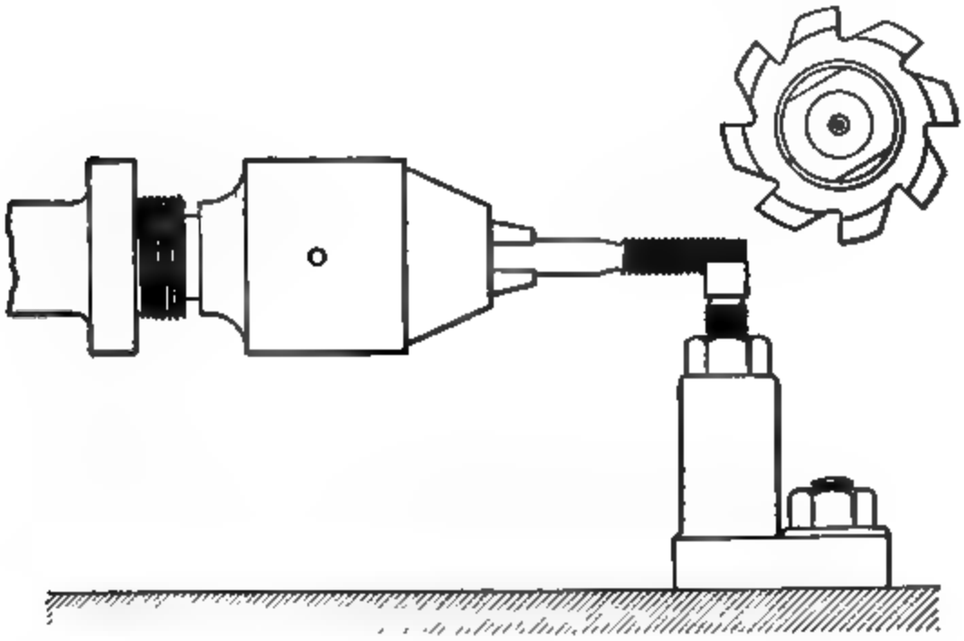

FIG. 19.

Fig. 19 shows an application of a steady rest with a V-ended setscrew to work held in a chuck; in this particular case, the work is a tap that is to be fluted. Since the work itself will hold the setscrew from turning, there is no

need of splining it and fitting a feather to the base, as is occasionally done.

31. Limitations of Ordinary Steady Rest.—The ordinary steady rest supplied by manufacturers, of which the one shown in Fig. 17 is an example, will answer very well for comparatively stiff work, but since it supports the work at one point only, as can be seen by referring to Fig. 17, it will, if the work is slender, still allow considerable bending of the unsupported parts during the cutting operation.

32. The ideal steady rest will always support the work directly beneath the cutter; this condition can be attained in two ways for cylindrical work; that is, either by a special steady rest made to suit the nature of the work, and constructed in such a manner as to support the work through its whole length, or by a *follow rest* attached to the frame of the machine and adjusted so as to be directly beneath the cutter.

A follow rest is open to practical objections, one of which is that it is applicable to none but cylindrical work, and to that only when the direction of the cut is parallel to the axis of the work. Another objection is the difficulty of attaching and designing it in such a manner as to have a fairly satisfactory range of application.

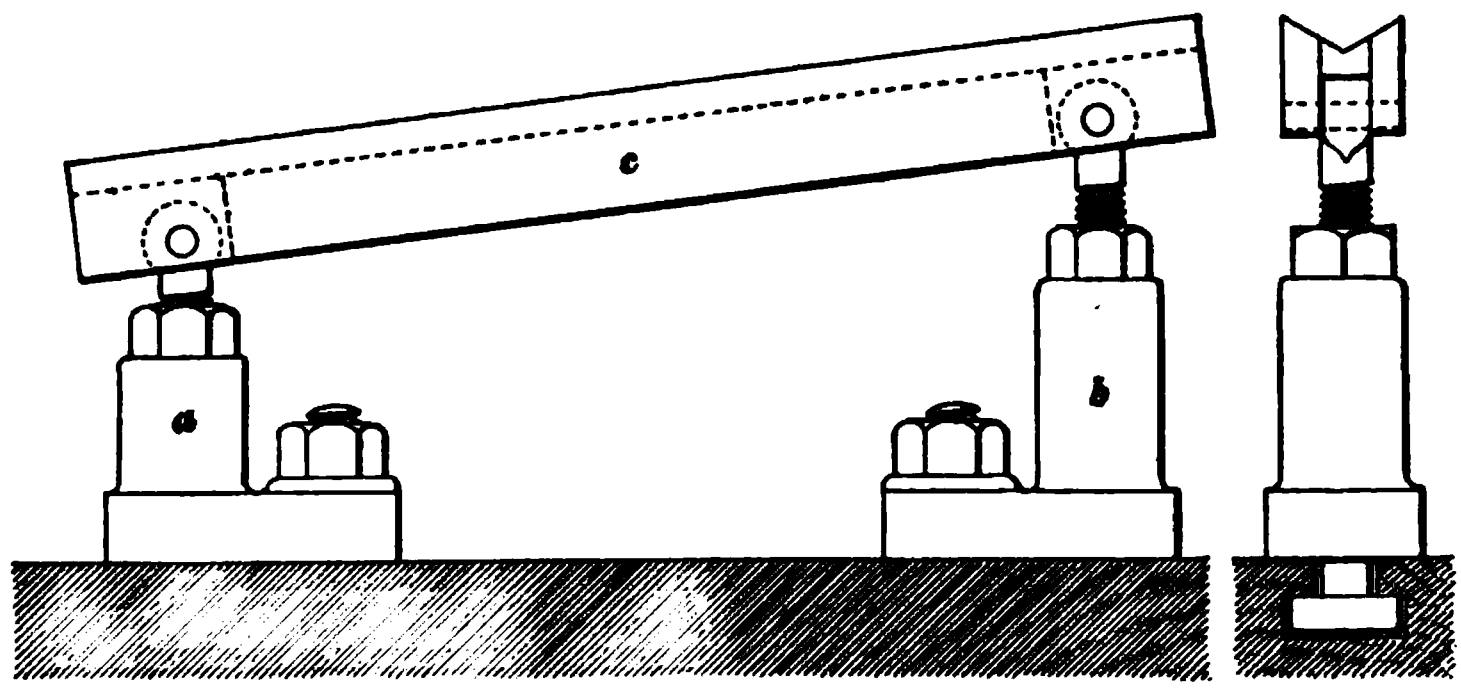

FIG. 20.

33. Universal Steady Rest.—Fig. 20 shows how a rather satisfactory universal steady rest applicable to straight

and taper work may be constructed for a horizontal milling machine. There are two bases *a* and *b*, which carry jack-screws and adjusting nuts. The ends of the jack-screws form eyes that are hinged to a supporting bar *c*, which may have a V groove milled in its upper side or be flat on top. As shown in the figure, it can readily be adjusted to suit taper work. Its range of usefulness can be extended by having several bars of different lengths.

INDEXING.

SIMPLE INDEXING.

34. Definitions. — There are many designs of index heads in the market and in use that differ only in detail and arrangement. All these designs make use of at least one of two methods of dividing the periphery of circular work into equal parts, and some designs make use of both methods. The process of dividing the circle by means of the index head is known in shop parlance as **indexing.** The two methods of indexing that are in use may be classified as *direct indexing* and *indirect indexing.*

Direct indexing is done by the aid of an index plate fastened direct to the index-head spindle; that is, the index plate is moved to obtain the divisions.

In **indirect indexing,** the index plate is normally stationary, and the index-head spindle is rotated by the use of suitable gearing. Indirect indexing is divided into two classes, which are known, respectively, as *simple* and *compound* indexing. In simple indexing, only one movement of the indexing mechanism is required; in compound indexing, two movements are made.

35. Construction of Indexing Mechanism.—Fig. 21 shows the indirect indexing arrangement reduced to the elementary form in which it appears in all index heads adapted to indirect indexing. The arrangements of the

details may vary in different designs, but the principle involved is common to all. The index-head spindle *a* has fastened to it a worm-wheel *b*; a worm *c*, which is keyed to the worm-shaft *d*, meshes with the worm-wheel. The worm-shaft carries at one end a radially adjustable crank *e*, which is fitted with a latch pin *f* having a cylindrical projection that fits the holes of the stationary index plate *g*. The index plate is usually kept from rotating by means of an axially movable pin, called the **stop-pin,** which is fitted

FIG. 21.

to the frame. This stop-pin can be withdrawn in order to allow the index plate to be rotated, should this become necessary. In most designs of index heads, the position of the stop-pin in respect to the axis of the worm-shaft is fixed; in other words, it can be made to engage with only one row or circle of holes in the index plate. There are some designs, however, where the stop-pin is fitted to the frame of the index head in such a manner that it can be shifted to engage any row of holes in the index plate.

36. Calculating Turns of Index Crank.—Referring now to the illustration, it will be apparent that the part of a revolution made by the index-head spindle for one complete turn of the worm-shaft depends on the number of teeth of the worm-wheel, and whether the worm has a single thread or a double thread. All modern index heads

regularly manufactured use a single-threaded worm, and, for these, one turn of the worm will produce that part of the revolution of the index-head spindle represented by the fraction $\frac{1}{\text{number of teeth in worm-wheel}}$. Now, suppose that the latch pin *f* engages the index circle having 20 holes, and that it is moved from one hole to the next adjoining one. Then, the worm is rotated $\frac{1}{20}$ of a revolution; assuming the worm-wheel to have 40 teeth, the index-head spindle is revolved $\frac{1}{40} \times \frac{1}{20} = \frac{1}{800}$ part of a revolution, and, hence, by making successive moves of 1 hole in the index circle having 20 holes, a circle is divided into $\frac{800}{1} = 800$ parts.

37. Now, suppose that, instead of moving the latch pin only 1 hole, it is moved 5 holes. Then, the worm-shaft makes $\frac{5}{20}$ of a revolution, the index-head spindle makes $\frac{1}{40} \times \frac{5}{20} = \frac{5}{800}$ of a turn, and, hence, a circle is divided into $\frac{800}{5} = 160$ parts. From the foregoing explanation of the principle involved, the following rule is deduced:

Rule.—*To obtain the number of turns the index crank must make, divide the number of turns required for one revolution of the index-head spindle by the number of divisions into which the periphery of the work is to be divided.*

EXAMPLE.—In a certain make of index head, the crank must make 40 revolutions to produce 1 revolution of the index spindle. How many turns must the crank make to divide the periphery of the given work into 6 parts?

SOLUTION.—Applying the rule just given, we get

$$40 \div 6 = 6\tfrac{2}{3} \text{ turns. Ans.}$$

38. Selecting the Index Circle.—Taking the example of Art. **37**, it has been calculated that 6 whole turns and $\frac{2}{3}$ of a turn are required. The question now arises: How can we measure $\frac{2}{3}$ of a turn? For convenience of measuring fractional parts of a turn of different values, as $\frac{2}{3}$ of a turn, $\frac{5}{17}$ of a turn, $\frac{1}{19}$ of a turn, $\frac{2}{3}$ of a turn, etc., the index plate is provided with several concentric index circles, each circle having a different number of holes; several more

index plates are provided in order to extend the range of divisions obtainable.

39. With the latch pin adjusted to the circle having 20 holes, as in Fig. 21, to measure $\frac{2}{3}$ of a turn, the pin would evidently have to be moved $20 \times \frac{2}{3} = 13\frac{1}{3}$ holes. But it is much more convenient and also safer to move the latch pin an integral number of holes; this is done by selecting a suitable index circle. The index circle that is to be used is the one having a number of holes divisible, without a remainder, by the denominator of the fraction expressing the fractional part of a turn of the index crank. Referring again to Fig. 21, it is seen that the index circles have 20, 19, 18, 17, 16, and 15 holes. It will be noticed that there are two index circles divisible by the denominator 3 of the fractional part of turn, which are the 18-hole and 15-hole circles. This shows that either one of these two circles may be used.

Suppose we use the index circle having 15 holes. Then, to make $\frac{2}{3}$ of a turn, the latch pin must be moved $15 \times \frac{2}{3} = 10$ holes. If the circle having 18 holes is used, the latch pin must be moved $18 \times \frac{2}{3} = 12$ holes. From the foregoing statements, the following rule is obtained:

Rule.—*To measure fractional parts of a turn of the index crank, select an index circle having a number of holes that is divisible by the denominator of the fraction when reduced to its lowest terms. Multiply the number of holes in the index circle thus selected by the fraction to obtain the number of holes that the latch pin must be moved for the fractional part of a turn.*

EXAMPLE.—In a given index head, 40 turns of the index crank will produce one turn of the index-head spindle. How many turns must the index crank make, and what index circle would be used to divide the periphery of work into 28 divisions? The index plate available has the following number of holes in the various circles, 37, 39, 41, 43, and 49.

SOLUTION.—By the rule given in Art. **37**, to obtain 28 divisions, the index crank must make $\frac{40}{28} = 1\frac{12}{28}$ turns. Reducing the fraction giving the fractional part of a turn to its lowest terms, we get $\frac{3}{7}$. Now, according to the rule given in Art. **39**, we select the index circle

having 49 holes, it being the only one having a number of holes divisible by 7. The number of holes that the latch pin must be moved is $49 \times \frac{3}{7} = 21$.

Then, to obtain 28 divisions, make one complete turn and move the latch pin 21 holes additional in the circle having 49 holes. Ans.

40. Use of Sector.—The **sector** is a device used in connection with an index plate primarily for the purpose of saving the labor of counting the number of holes for each move of the latch pin, and incidentally for obviating mistakes in counting. Fig. 22 shows a sector in place on an

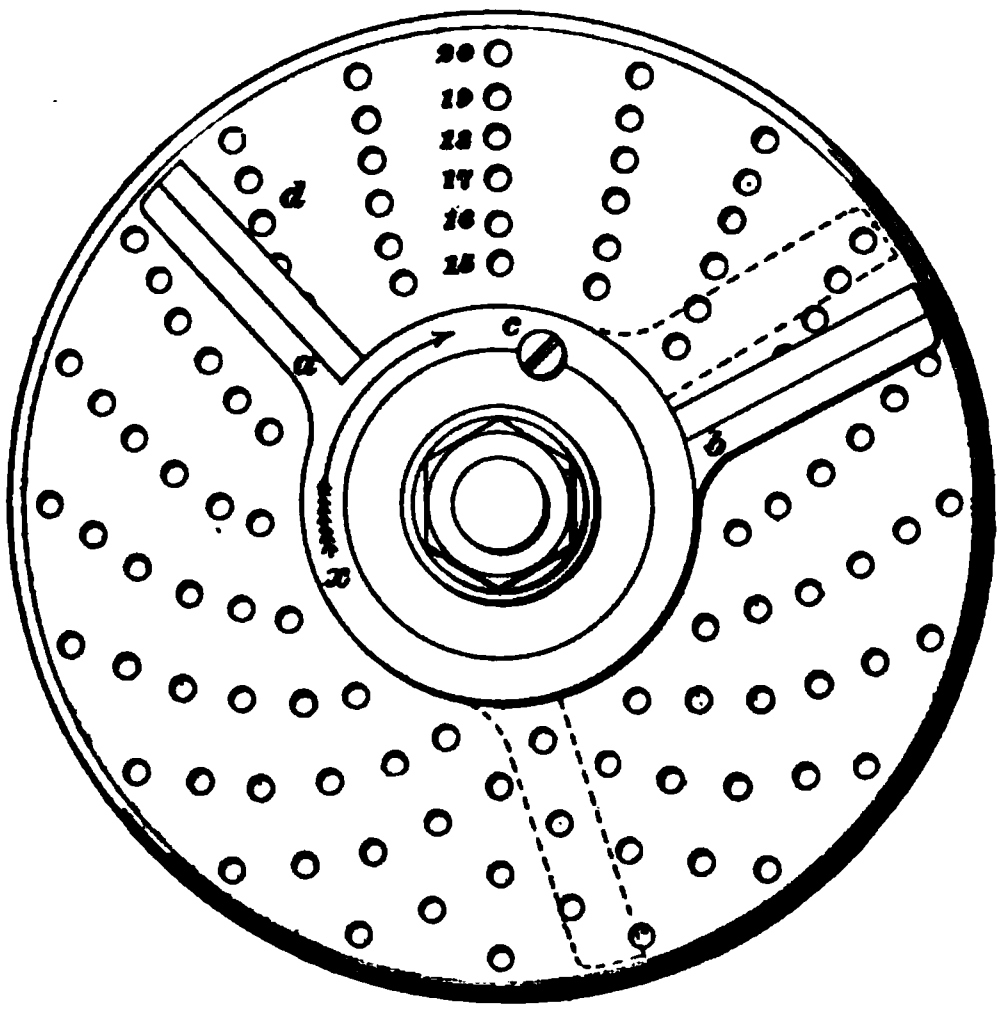

FIG. 22.

index plate. The sector consists of two radial arms *a* and *b*, which are so put together that the angle included between them can be changed; the two arms can be locked by tightening the screw *c*.

After the index crank has been adjusted so that the latch pin will drop fairly into the holes of the index circle that has been selected, say the circle having 18 holes in Fig. 22, drop the latch pin into one of the holes of that circle, as *d*, for instance. Bring the arm *a* against the left side of the latch pin and then move the arm *b* in the same direction in

which the latch pin is to turn, as in the direction of the arrow *x*, until the required number of holes in the circle used is between the latch pin and the arm *b*. Then lock the arms together. Thus, if it is required to move 5 holes in the index circle having 18 holes, place the arm *b* in the position it occupies in the illustration. In setting the arms of the sector, always observe the precaution of omitting to count the hole in which the latch pin is inserted; that is, count the hole next to this as the first hole. After the cut has been taken, withdraw the latch pin and make the required number of whole turns of the index crank, using the hole from which the latch pin was withdrawn as the starting point. Then move the index crank until the latch pin will drop into the hole indicated by the arm *b* of the sector, drop it in and immediately revolve the sector until the arm *a* is against the latch pin, or in the position shown in dotted lines.

41. Index Tables. — The manufacturers of milling machines, as a general rule, will furnish tables with their index heads that give all the divisions that can be obtained by simple indirect indexing. In these tables, under the heading "Number of Turns of Crank," the number of turns and, if necessary, fractional parts of a turn, are given. The fractional part of a turn is usually given as a fraction, the denominator of which gives the number of holes in the index circle that is to be used; the numerator denotes the number of holes of that circle that the latch pin is to be moved in addition to the whole turns. When no fractional part of a revolution is required, *any* index circle may be used. If no table is available, the crank movements must be calculated in the manner explained.

42. Effect of Changing Elevation of Head.— When the index head is elevated or depressed while work is attached to the spindle, it will be found that the spindle is rotated slightly by the act of changing the angle, since a change in the angle rotates the worm-wheel about the worm, which is the same as rotating the worm in the opposite

direction. For this reason, the work must be reset after each change of the angle of the index head. This is done by rotating it in the required direction by means of the index crank.

COMPOUND INDEXING.

43. Operation.—By the method of simple indexing, the range of divisions obtainable is limited to certain numbers depending directly on the number of index circles, and the number of holes in them, that are available. The range of divisions can, however, be greatly extended by a method known as **compound indexing.** The fundamental principle underlying compound indexing may be explained as follows: In Fig. 21, let the latch pin *f* be adjusted to the 20-hole index circle, and let the stop-pin be adjusted to the 19-hole index circle. Now, withdraw the latch pin and move the crank one hole, dropping the latch pin into the hole. Withdraw the stop-pin from the index plate and then rotate the index plate one hole, or $\frac{1}{19}$ of a turn, in the same direction in which the index crank was turned. Evidently, the worm *c* has been rotated $\frac{1}{20} + \frac{1}{19} = \frac{39}{380}$ of a turn, which is a part of a turn that ordinarily could not be measured without an index plate having a circle with 380 holes. Now, instead of moving the index plate in the same direction as the index crank, move it in the opposite direction. Then, the worm, as the result of the two movements, will have been rotated $\frac{1}{19} - \frac{1}{20} = \frac{1}{380}$ of a turn; a result that, as before, could not ordinarily be measured with the index plate shown. It is thus seen that compound indexing consists of two successive simple indexing operations; the result of the two operations is either the sum or the difference of the two simple indexings.

44. Calculating the Moves.—The moves required for compound indexing may be calculated by the following rule, which has been deduced algebraically:

Rule.—*Factor the number of divisions it is desired to obtain. Choose an index plate and two circles of holes*

thereon for trial; take the difference of the number of holes in the two circles and factor this difference. Draw a horizontal line under the factors. Next, factor the number of turns of the index crank required for one turn of the index-head spindle and write the factors below the horizontal line. Factor the number of holes in the two chosen circles, and write their factors also below the line. Next, cancel equal factors above and below the line. If **all** *factors above the line cancel, it is possible to obtain the proposed number of divisions by means of the two chosen circles. The number of holes to be gone forwards in one circle and backwards in the other circle are obtained by multiplying together the remaining factors below the line. Special attention is called to the fact that in case* **all** *the factors* **above** *the line do not cancel out, two other circles must be tried until the desired result is obtained or the possible combinations have been exhausted. In case the division is feasible, write a plus sign before one move and a minus sign before the other move to signify that they are opposite in direction.*

EXAMPLE.—It is desired to obtain 91 divisions with an index head in which 40 turns of the crank shall produce 1 revolution of the index-head spindle. What are the moves that are required in case it is found that 91 divisions can be obtained by compound indexing?

SOLUTION.—Choose two circles for trial, say those having 21 and 31 holes. By the rule just given, we have

$$\begin{aligned} 91 &= \cancel{7} \times 13 \\ 31 - 21 = 10 &= \cancel{2} \times \cancel{5} \\ \hline 40 &= \cancel{2} \times 2 \times 2 \times \cancel{5} \\ 31 &= 31 \times 1 \\ 21 &= 3 \times \cancel{7} \end{aligned}$$

It will be noticed that the factor 13 above the line does not cancel out; this shows that the proposed division cannot be obtained with circles having 31 and 21 holes. By trying different combinations, it will be found that circles having 39 and 49 holes will answer; thus:

$$\begin{aligned} 91 &= \cancel{7} \times \cancel{13} \\ 49 - 39 = 10 &= \cancel{2} \times \cancel{5} \\ \hline 40 &= \cancel{2} \times 2 \times 2 \times \cancel{5} \\ 49 &= \cancel{7} \times 7 \\ 39 &= 3 \times \cancel{13} \end{aligned}$$

It is seen that all the factors above the line cancel out. Multiplying the remaining factors below the line together, we get $2 \times 2 \times 7 \times 3 = 84$; that is, in order to obtain 91 divisions, we must go forwards 84 holes in the 49-hole circle, and backwards 84 holes in the 39-hole circle; or, go forwards 84 holes in the 39-hole circle and go backwards 84 holes in the 49-hole circle. Writing the moves as directed in the rule, they are

$$+\tfrac{84}{49} - \tfrac{84}{39}, \text{ or } +\tfrac{84}{39} - \tfrac{84}{49}. \quad \text{Ans.}$$

45. In case the number of holes in one or both of the chosen index circles are prime numbers, it is to be observed that the factors will be the number itself and 1. Thus, the factors of 17 are 17×1; the factors of 13 are 13×1, and so on.

46. Simplifying the Moves. — The counting of a large number of holes, especially for the motion of the index plate where no sector can readily be used, is a tedious job, and errors are very liable to occur in counting. In many cases, the results obtained by the rule in Art. **44** can be greatly simplified by a calculation that only involves a knowledge of algebraic addition.

The rules of algebraic addition are very simple and easily remembered. When the signs are alike, add as in ordinary addition and prefix the common sign. For instance, the sum of $+21$ and $+11$ is $+32$, and the sum of -12 and -7 is -19.

When the signs are unlike, in order to add, subtract the smaller value from the larger value, and prefix the sign of the larger value. Thus, the sum of $+18$ and -24 is -6; of $+18$ and -12 is $+6$; of -7 and $+3$ is -4, etc.

The algebraic addition of common fractions is performed, after reduction to a common denominator, by operating upon their numerators only; thus, to add $+\frac{2}{3}$ and $-\frac{1}{5}$, they must first be reduced to a common denominator. This is $3 \times 5 = 15$. Then $\frac{2}{3} = \frac{10}{15}$, and $\frac{1}{5} = \frac{3}{15}$. Adding $+\frac{10}{15}$ and $-\frac{3}{15}$, we get $+\frac{7}{15}$ as the sum.

47. Taking the example given in Art. **44**, the forward move is $+\frac{84}{49}$, that is, 84 holes in the circle having 49 holes, and the backward move is $-\frac{84}{39}$. Now, it can be shown

mathematically and by trial that the result will not be altered if we add algebraically any convenient number of whole turns or a part of a turn, or a whole turn and a part of a turn, with a minus sign prefixed, to the forward move, and add algebraically the same amount with a plus sign prefixed to the backward move. Thus, say, that we add one turn to each move. Then, one complete turn $= \frac{49}{49}$ and $\frac{39}{39}$. Performing the operation we get

$$\begin{array}{r} +\frac{84}{49} - \frac{84}{39} \\ -\frac{49}{49} + \frac{39}{39} \\ \hline +\frac{35}{49} - \frac{45}{39}, \end{array}$$

or 35 holes forwards in the index circle having 49 holes and 45 holes backwards in the circle having 39 holes. It may be possible to reduce these moves to a still simpler form. To discover if this is possible, add algebraically one or more turns or parts of a turn, or whole turns and part of a turn, to each move, prefixing the plus and minus signs as previously directed.

Suppose one turn is added. We then get

$$\begin{array}{r} +\frac{35}{49} - \frac{45}{39} \\ -\frac{49}{49} + \frac{39}{39} \\ \hline -\frac{14}{49} - \frac{6}{39}. \end{array}$$

That is, the one move is 14 holes in the index circle having 49 holes, and the other move is 6 holes in the 39-hole circle. It will be observed that the addition of one turn gave like signs to the two moves; this means that both moves must be made in the *same direction.*

48. In order to obtain 154 divisions by compound indexing, the 33-hole and 21-hole index circles can be used, and the moves are found thus:

$$\begin{array}{rl} 154 = & \cancel{2} \times \cancel{7} \times \cancel{11} \\ 33 - 21 = 12 = & \cancel{2} \times \cancel{2} \times \cancel{3} \\ \hline 40 = & \cancel{2} \times \cancel{2} \times \cancel{2} \times 5 \\ 33 = & \cancel{3} \times \cancel{11} \\ 21 = & 3 \times \cancel{7}. \end{array}$$

Multiplying the remaining factors together, we get $3 \times 5 = 15$, or moves of $+\frac{15}{33} - \frac{15}{21}$, or $+\frac{15}{21} - \frac{15}{33}$.

Simplifying by adding, say, 1 turn to the moves first named, we get

$$\begin{array}{r} +\frac{15}{33} - \frac{15}{21} \\ -\frac{33}{33} + \frac{21}{21} \\ \hline -\frac{18}{33} + \frac{6}{21}. \end{array}$$

In this particular case, an excellent example presents itself of still further simplifying the moves by the algebraic addition of a fractional part of a turn. Let $\frac{2}{3}$ of a turn be added. Now, $\frac{2}{3}$ of a turn, with an index circle having 21 holes, means $\frac{14}{21}$ of a turn of the index crank. Likewise, $\frac{2}{3}$ of a turn with an index circle having 33 holes, means $\frac{22}{33}$ of a turn of the index crank. Then, adding these values with the proper signs prefixed, we get

$$\begin{array}{r} +\frac{6}{21} - \frac{18}{33} \\ -\frac{14}{21} + \frac{22}{33} \\ \hline -\frac{8}{21} + \frac{4}{33}. \end{array}$$

As it does not make the least difference in the result as to the direction in which the moves are made, as long as they are made in opposite directions (the fact of the signs being unlike indicates that they must be opposite in direction), the moves may be $+\frac{8}{21}$ and $-\frac{4}{33}$ without affecting the result.

The moves may, in this particular case, be still further simplified by the algebraic addition of $\frac{1}{3}$ of a turn. $\frac{1}{3}$ of a turn $= \frac{7}{21}$, and $\frac{11}{33}$. Then,

$$\begin{array}{r} +\frac{8}{21} - \frac{4}{33} \\ -\frac{7}{21} + \frac{11}{33} \\ \hline +\frac{1}{21} + \frac{7}{33}. \end{array}$$

Since the moves have like signs, both moves are to be made in the same direction.

49. There is no general rule that can be given for determining how much to add algebraically to each move in order to reduce it to a simpler form. This is purely a matter of judgment and experiment. It is to be observed,

however, that when a partial turn is added, the denominator of the fraction expressing the partial turn must be a common factor of the denominators of the two fractions expressing the two moves. Thus, $\frac{5}{7}$ of a turn should not be added to $+\frac{6}{21}$ and $-\frac{13}{33}$, since 7 is not a factor common to both 21 and 33.

50. In relation to compound indexing, it may be remarked that it should not be used when the required divisions can be obtained by direct indexing. The reason for this may be found in the fact that the chances of making an error are much greater with the compound indexing, since, for at least one of the movements, the holes must actually be counted.

MILLING-MACHINE WORK.

(PART 4.)

USE OF THE MILLING MACHINE.

INDEXING.

THE SPIRAL HEAD.

1. Introduction.—By the use of the improved **spiral head** now furnished by the Brown & Sharpe Company, both simple and compound indexing can be performed readily. The simple indexing does not differ from that already explained, but the differential indexing is accomplished through a train of gearing without having to rotate the index plate a certain number of holes by hand each time. The system previously explained can be used on the new spiral heads, but only the new spiral heads are arranged to accomplish differential indexing with the same ease and facility that simple indexing is done. Other spiral heads on universal milling machines might be changed so as to operate the index dial by the index crank in a similar manner to that used in the improved index heads.

2. The Gearing of the Improved Spiral Head. The gearing of the improved spiral head is shown in Fig. 1. (*a*) and (*b*). The index crank is shown at *a* connected to the index dial *b* by the pin that slides in the handle of the crank. At *c* a miter gear is shown to which the index

For notice of copyright, see page immediately following the title page.

dial is fastened by screws. The shaft shown at *d* passes through the dial and miter gear; it is not keyed to them,

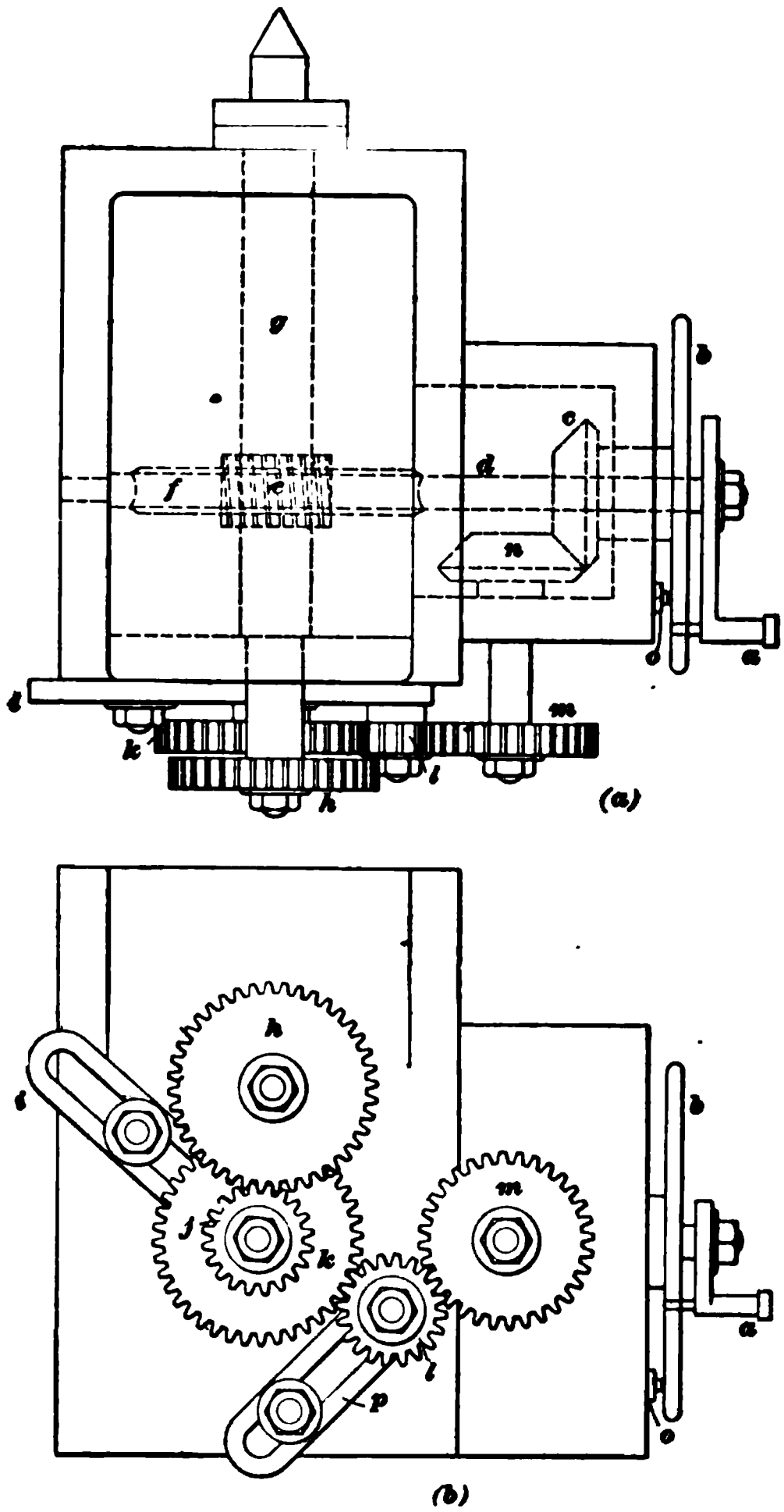

FIG. 1.

but moves freely without affecting their motion. A right-handed worm shown at *e* is keyed to the shaft and meshes with the worm-wheel *f*, which it operates. The worm-wheel

in this case has 40 teeth, so that by turning the index crank, which is rigidly connected to the shaft and worm, 40 times, the worm-wheel and index head rotate one complete turn. Some index heads are fitted with worm-wheels with 60 instead of 40 teeth, but the other arrangements are the same as shown in Fig. 1 (*a*) and (*b*). On the outer end of the spindle *g* is keyed the spur gear *h*. The adjustable bracket *i* carries a bushing that is free to turn on the bracket stud, and to which are keyed the two spur gears *j* and *k*. The gear *j* meshes with the gear *h*, and the gear *k* meshes with the idler *l*, which is fastened to an adjustable bracket *p*. The idler serves merely to change the direction of motion of the gear *m*, and has no effect on the relative speeds of the gears. Keyed to the same shaft with the spur gear *m* is a miter gear *n* that meshes with the miter gear *c*. At *o* is shown the stop-pin that can be slipped into the dial to hold it from rotating. In simple indexing, the idler *l* or the compound gears *j*, *k* are disengaged from the gear-train, and the stop-pin *o* is slipped into the dial, thus holding it in position.

When using the head for differential indexing, the stop-pin *o* is disengaged from the dial *b* and the gears put in mesh, so that when the crank *a* is turned, the gear-train transmits the motion to the dial. Any of the gears *h*, *j*, *k*, *m* can be removed and others put in their places to obtain different gear ratios, or in other words, to obtain a different number of revolutions of the index dial to one revolution of the work.

3. Effect of Rotating the Index Dial.—When the gearing is arranged as shown in Fig. 1 (*a*) and (*b*), the index dial rotates in the opposite direction to that of the index crank. If the idler is disengaged and the gears on the bracket *i* are brought into mesh with the gears *h*, *m*, the index dial will rotate in the same direction as the index crank. A spacing collar on the shaft that carries the gear *h* can be removed when only one gear is to be used on the bracket *i*. The effect, however, is the same as having the gears *j*, *k* of the same size.

If the index dial shown in Fig. 2 is used stationary, and the index crankpin is rotated in the direction of the arrow x, it will be necessary for the crankpin to pass the point a 40 times, or to make 40 complete revolutions, to turn the index-head spindle once. If, on the other hand, the gearing is so arranged that the index dial is turned once in the same direction as the crank while the index spindle turns once, it will be necessary for the crankpin to pass the point a only 39 times in order to turn the index-head spindle once around. If the index dial moves in the opposite direction to that of the index crank, with the same gear ratio, then the crank will pass the point a 41 times in moving the index spindle one turn.

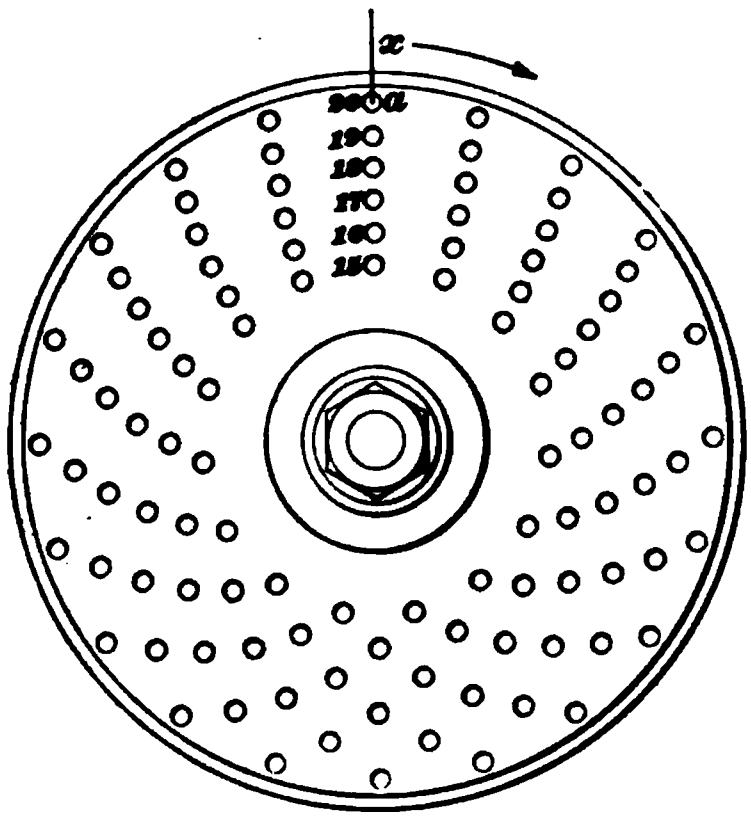

FIG. 2.

The number of times the index crankpin passes the starting point plus the fractional part of a turn it passes beyond that point has been appropriately called the index-reckoning number. The reason for adding the fractional part of the dial that the index crank passes over is because the dial may be so geared as to make a fractional number of turns while the crank makes 40 complete revolutions.

For example, suppose the dial moves $2\frac{1}{5}$ times around in the opposite direction to the arrow while the crankpin moves in the same direction as the arrow 40 complete turns. The index-reckoning number is $42\frac{4}{5}$, which means that the crankpin must pass the point a 42 times and go four-fifths of the way around the dial again. Now if the crankpin spaces 8 holes on the 20-hole circle it will go two-fifths of the way around the circle each time, or in order to make the 40 complete turns, it will make as many spacings as $\frac{2}{5}$ is contained in $42\frac{4}{5}$, or 107 times. This principle has been applied in computing the table that follows:

TABLE I.

DIFFERENTIAL INDEXING.

Number of Divisions	Index Circle.	Number of Turns of Index.	Gear *m*.	Gear *k*.	Gear *j*.	Gear *h*.	Idler *k*.	Idler *l*.	Number of Divisions.	Index Circle.	Number of Turns of Index.	Gear *m*.	Gear *k*.	Gear *j*.	Gear *h*.	Idler *k*.	Idler *l*.
									31	31	$1\frac{9}{31}$						
2	Any	20							32	20	$1\frac{5}{20}$						
3	39	$13\frac{1}{39}$							33	33	$1\frac{7}{33}$						
4	Any	10							34	17	$1\frac{3}{17}$						
5	Any	8							35	49	$1\frac{7}{49}$						
6	39	$6\frac{2}{39}$							36	27	$1\frac{9}{27}$						
7	49	$5\frac{5}{49}$							37	37	$1\frac{3}{37}$						
8	Any	5							38	19	$1\frac{1}{19}$						
9	27	$4\frac{18}{27}$							39	39	$1\frac{1}{39}$						
10	Any	4							40	Any	1						
11	33	$3\frac{21}{33}$							41	41	$\frac{40}{41}$						
12	39	$3\frac{18}{39}$							42	21	$\frac{20}{21}$						
13	39	$3\frac{3}{39}$							43	43	$\frac{40}{43}$						
14	49	$2\frac{42}{49}$							44	33	$\frac{30}{33}$						
15	39	$2\frac{36}{39}$							45	27	$\frac{24}{27}$						
16	20	$2\frac{10}{20}$							46	23	$\frac{20}{23}$						
17	17	$2\frac{6}{17}$							47	47	$\frac{40}{47}$						
18	27	$2\frac{6}{27}$							48	18	$\frac{15}{18}$						
19	19	$2\frac{2}{19}$							49	49	$\frac{40}{49}$						
20	Any	2							50	20	$\frac{18}{20}$						
21	21	$1\frac{19}{21}$							51	17	$\frac{14}{17}$	24			48	24	44
22	33	$1\frac{27}{33}$							52	39	$\frac{30}{39}$						
23	23	$1\frac{17}{23}$							53	49	$\frac{36}{49}$	56	40	24	72		
24	39	$1\frac{26}{39}$							54	27	$\frac{20}{27}$						
25	20	$1\frac{18}{20}$							55	33	$\frac{24}{33}$						
26	39	$1\frac{21}{39}$							56	49	$\frac{35}{49}$						
27	27	$1\frac{18}{27}$							57	21	$\frac{15}{21}$	56			40	24	44
28	49	$1\frac{21}{49}$							58	29	$\frac{20}{29}$						
29	29	$1\frac{14}{29}$							59	39	$\frac{26}{39}$	48			32	44	
30	39	$1\frac{18}{39}$							60	39	$\frac{26}{39}$						

TABLE I.—(*Continued.*)

Number of Divisions.	Index Circle.	Number of Turns of Index.	Gear *m*.	Gear *k*.	Gear *j*.	Gear *h*.	Idler *k*.	Idler *l*.
61	39	$\frac{26}{39}$	48			32	24	44
62	31	$\frac{20}{31}$						
63	39	$\frac{26}{39}$	24			48	24	44
64	16	$\frac{8}{16}$						
65	39	$\frac{24}{39}$						
66	33	$\frac{20}{33}$						
67	21	$\frac{14}{21}$	28			48	44	
68	17	$\frac{10}{17}$						
69	20	$\frac{12}{20}$	40			56	24	44
70	49	$\frac{28}{49}$						
71	18	$\frac{10}{18}$	72			40	24	
72	27	$\frac{15}{27}$						
73	21	$\frac{12}{21}$	28			48	24	44
74	37	$\frac{20}{37}$						
75	15	$\frac{8}{15}$						
76	19	$\frac{10}{19}$						
77	20	$\frac{10}{20}$	32			48	44	
78	39	$\frac{20}{39}$						
79	20	$\frac{10}{20}$	48			24	44	
80	20	$\frac{10}{20}$						
81	20	$\frac{10}{20}$	48			24	24	44
82	41	$\frac{20}{41}$						
83	20	$\frac{10}{20}$	32			48	24	44
84	21	$\frac{10}{21}$						
85	17	$\frac{8}{17}$						
86	43	$\frac{20}{43}$						
87	15	$\frac{7}{15}$	40			24	24	44
88	33	$\frac{15}{33}$						
89	18	$\frac{8}{18}$	72			32	44	
90	27	$\frac{12}{27}$						

Number of Divisions.	Index Circle.	Number of Turns of Index.	Gear *m*.	Gear *k*.	Gear *j*.	Gear *h*.	Idler *k*.	Idler *l*.
91	39	$\frac{18}{39}$	24			48	24	44
92	23	$\frac{10}{23}$						
93	18	$\frac{8}{18}$	24			32	24	44
94	47	$\frac{20}{47}$						
95	19	$\frac{8}{19}$						
96	21	$\frac{9}{21}$	28			32	24	44
97	20	$\frac{8}{20}$	40			48	44	
98	49	$\frac{20}{49}$						
99	20	$\frac{8}{20}$	56	28	40	32		
100	20	$\frac{8}{20}$						
101	20	$\frac{8}{20}$	72	24	40	48		24
102	20	$\frac{8}{20}$	40			32	24	44
103	20	$\frac{8}{20}$	40			48	24	44
104	39	$\frac{16}{39}$						
105	21	$\frac{8}{21}$						
106	43	$\frac{16}{43}$	86	24	24	48		
107	20	$\frac{8}{20}$	40	56	32	64		24
108	27	$\frac{10}{27}$						
109	16	$\frac{6}{16}$	32			28	24	44
110	33	$\frac{12}{33}$						
111	39	$\frac{12}{39}$	24			72	32	
112	39	$\frac{12}{39}$	24			64	44	
113	39	$\frac{12}{39}$	24			56	44	
114	39	$\frac{12}{39}$	24			48	44	
115	23	$\frac{8}{23}$						
116	29	$\frac{10}{29}$						
117	39	$\frac{12}{39}$	24			24	56	
118	39	$\frac{12}{39}$	48			32	44	
119	39	$\frac{12}{39}$	72			24	44	
120	39	$\frac{12}{39}$						

TABLE I.—(*Continued.*)

Number of Divisions.	Index Circle.	Number of Turns of Index.	Gear *m*.	Gear *k*.	Gear *j*.	Gear *h*.	Idler *k*.	Idler *l*.
121	39	$\frac{1}{39}$	72			24	24	44
122	39	$\frac{1}{39}$	48			32	24	44
123	39	$\frac{1}{39}$	24			24	24	44
124	31	$\frac{1}{31}$						
125	39	$\frac{1}{39}$	24			40	24	44
126	39	$\frac{1}{39}$	24			48	24	44
127	39	$\frac{1}{39}$	24			56	24	44
128	16	$\frac{1}{16}$						
129	39	$\frac{1}{39}$	24			72	24	44
130	39	$\frac{1}{39}$						
131	20	$\frac{1}{20}$	40			28	44	
132	33	$\frac{1}{33}$						
133	21	$\frac{1}{21}$	24			48	44	
134	21	$\frac{1}{21}$	28			48	44	
135	27	$\frac{1}{27}$						
136	17	$\frac{1}{17}$						
137	21	$\frac{1}{21}$	28			24	56	
138	21	$\frac{1}{21}$	56			32	44	
139	21	$\frac{1}{21}$	56	32	48	24		
140	49	$\frac{1}{49}$						
141	18	$\frac{1}{18}$	48			40	44	
142	21	$\frac{1}{21}$	56			32	24	44
143	21	$\frac{1}{21}$	28			24	24	44
144	18	$\frac{1}{18}$						
145	29	$\frac{1}{29}$						
146	21	$\frac{1}{21}$	28			48	24	44
147	21	$\frac{1}{21}$	24			48	24	44
148	37	$\frac{1}{37}$						
149	21	$\frac{1}{21}$	28			72	24	44
150	15	$\frac{1}{15}$						
151	20	$\frac{1}{20}$	32			72	44	
152	19	$\frac{1}{19}$						
153	20	$\frac{1}{20}$	32			56	44	
154	20	$\frac{1}{20}$	32			48	44	
155	31	$\frac{1}{31}$						
156	39	$\frac{1}{39}$						
157	20	$\frac{1}{20}$	32			24	56	
158	20	$\frac{1}{20}$	48			24	44	
159	20	$\frac{1}{20}$	64	32	56	28		
160	20	$\frac{1}{20}$						
161	20	$\frac{1}{20}$	64	32	56	28		24
162	20	$\frac{1}{20}$	48			24	24	44
163	20	$\frac{1}{20}$	32			24	24	44
164	41	$\frac{1}{41}$						
165	33	$\frac{1}{33}$						
166	20	$\frac{1}{20}$	32			48	24	44
167	20	$\frac{1}{20}$	32			56	24	44
168	21	$\frac{1}{21}$						
169	20	$\frac{1}{20}$	32			72	24	44
170	17	$\frac{1}{17}$						
171	21	$\frac{1}{21}$	56			40	24	44
172	43	$\frac{1}{43}$						
173	18	$\frac{1}{18}$	72	56	32	64		
174	18	$\frac{1}{18}$	24			32	56	
175	18	$\frac{1}{18}$	72	40	32	64		
176	18	$\frac{1}{18}$	72	24	24	64		
177	18	$\frac{1}{18}$	72			48	24	
178	18	$\frac{1}{18}$	72			32	44	
179	18	$\frac{1}{18}$	72	24	48	32		
180	18	$\frac{1}{18}$						

TABLE I.—(*Continued.*)

Number of Divisions.	Index Circle.	Number of Turns of Index.	Gear *m*.	Gear *k*.	Gear *j*.	Gear *h*.	Idler *k*	Idler *l*.
181	18	$\frac{4}{18}$	72	24	48	32		24
182	18	$\frac{4}{18}$	72			32	24	44
183	18	$\frac{4}{18}$	48			32	24	44
184	23	$\frac{2}{23}$						
185	37	$\frac{8}{37}$						
186	18	$\frac{4}{18}$	48			64	24	44
187	18	$\frac{4}{18}$	72	48	24	56		24
188	47	$\frac{1}{47}$						
189	18	$\frac{4}{18}$	32			64	24	44
190	19	$\frac{4}{19}$						
191	20	$\frac{4}{20}$	40			72	24	
192	20	$\frac{4}{20}$	40			64	44	
193	20	$\frac{4}{20}$	40			56	44	
194	20	$\frac{4}{20}$	40			48	44	
195	39	$\frac{8}{39}$						
196	49	$\frac{10}{49}$						
197	20	$\frac{4}{20}$	40			24	56	
198	20	$\frac{4}{20}$	56	28	40	32		
199	20	$\frac{4}{20}$	100	40	64	32		
200	20	$\frac{4}{20}$						
201	20	$\frac{4}{20}$	72	24	40	24		24
202	20	$\frac{4}{20}$	72	24	40	48		24
203	20	$\frac{4}{20}$	40			24	24	44
204	20	$\frac{4}{20}$	40			32	24	44
205	41	$\frac{8}{41}$						
206	20	$\frac{4}{20}$	40			48	24	44
207	20	$\frac{4}{20}$	40			56	24	44
208	20	$\frac{4}{20}$	40			64	24	44
209	20	$\frac{4}{20}$	40			72	24	44
210	21	$\frac{4}{21}$						

Number of Divisions.	Index Circle.	Number of Turns of Index.	Gear *m*.	Gear *k*.	Gear *j*.	Gear *h*.	Idler *k*.	Idler *l*.
211	16	$\frac{3}{16}$	64			28	44	
212	43	$\frac{7}{43}$	86	24	24	48		
213	27	$\frac{5}{27}$	72			40	44	
214	20	$\frac{4}{20}$	40	56	32	64		24
215	43	$\frac{7}{43}$						
216	27	$\frac{5}{27}$						
217	21	$\frac{4}{21}$	48			64	24	44
218	16	$\frac{3}{16}$	64			56	24	44
219	21	$\frac{4}{21}$	28			48	24	44
220	33	$\frac{6}{33}$						
221	17	$\frac{3}{17}$	24			24	56	
222	18	$\frac{3}{18}$	24			72	44	
223	43	$\frac{8}{43}$	86	48	24	64		24
224	18	$\frac{3}{18}$	24			64	44	
225	27	$\frac{5}{27}$	24			40	24	44
226	18	$\frac{3}{18}$	24			56	44	
227	49	$\frac{8}{49}$	56	64	28	72		
228	18	$\frac{3}{18}$	24			48	44	
229	18	$\frac{3}{18}$	24			44	48	
230	23	$\frac{4}{23}$						
231	18	$\frac{3}{18}$	32			48	44	
232	29	$\frac{5}{29}$						
233	18	$\frac{3}{18}$	48			56	44	
234	18	$\frac{3}{18}$	24			24	56	
235	47	$\frac{8}{47}$						
236	18	$\frac{3}{18}$	48			32	44	
237	18	$\frac{3}{18}$	48			24	44	
238	18	$\frac{3}{18}$	72			24	44	
239	18	$\frac{3}{18}$	72	24	64	32		
240	18	$\frac{3}{18}$						

TABLE I.—(*Continued.*)

Number of Divisions.	Index Circle.	Number of Turns of Index.	Gear *m*.	Gear *k*.	Gear *j*.	Gear *h*.	Idler *k*.	Idler *l*.
241	18	$\frac{3}{18}$	72	24	64	32		24
242	18	$\frac{3}{18}$	72			24	24	44
243	18	$\frac{3}{18}$	64			32	24	44
244	18	$\frac{3}{18}$	48			32	24	44
245	49	$\frac{9}{49}$						
246	18	$\frac{3}{18}$	24			24	24	44
247	18	$\frac{3}{18}$	48			56	24	44
248	31	$\frac{5}{31}$						
249	18	$\frac{3}{18}$	32			48	24	44
250	18	$\frac{3}{18}$	24			40	24	44
251	18	$\frac{3}{18}$	48	44	32	64		24
252	18	$\frac{3}{18}$	24			48	24	44
253	33	$\frac{5}{33}$	24			40	56	
254	18	$\frac{3}{18}$	24			56	24	44
255	18	$\frac{3}{18}$	48	40	24	72		24
256	18	$\frac{3}{18}$	24			64	24	44
257	49	$\frac{8}{49}$	56	48	28	64		24
258	43	$\frac{7}{43}$	32			64	24	44
259	21	$\frac{3}{21}$	24			72	44	
260	39	$\frac{6}{39}$						
261	29	$\frac{4}{29}$	48	64	24	72		
262	20	$\frac{3}{20}$	40			28	44	
263	49	$\frac{8}{49}$	56	64	28	72		24
264	33	$\frac{5}{33}$						
265	21	$\frac{3}{21}$	56	40	24	72		
266	21	$\frac{3}{21}$	32			64	44	
267	27	$\frac{4}{27}$	72			32	44	
268	21	$\frac{3}{21}$	28			48	44	
269	20	$\frac{3}{20}$	64	32	40	28		24
270	27	$\frac{4}{27}$						

Number of Divisions.	Index Circle.	Number of Turns of Index.	Gear *m*.	Gear *k*.	Gear *j*.	Gear *h*.	Idler *k*.	Idler *l*.
271	21	$\frac{3}{21}$	56			72	24	
272	21	$\frac{3}{21}$	56			64	24	
273	21	$\frac{5}{21}$	24			24	56	
274	21	$\frac{3}{21}$	56			48	44	
275	21	$\frac{3}{21}$	56			40	44	
276	21	$\frac{5}{21}$	56			32	44	
277	21	$\frac{3}{21}$	56			24	44	
278	21	$\frac{3}{21}$	56	32	48	24		
279	27	$\frac{4}{27}$	24			32	24	44
280	49	$\frac{7}{49}$						
281	21	$\frac{3}{21}$	72	24	56	24		24
282	43	$\frac{6}{43}$	86	24	24	56		
283	21	$\frac{3}{21}$	56			24	24	44
284	21	$\frac{3}{21}$	56			32	24	44
285	21	$\frac{3}{21}$	56			40	24	44
286	21	$\frac{3}{21}$	56			48	24	44
287	21	$\frac{3}{21}$	24			24	24	44
288	21	$\frac{3}{21}$	28			32	24	44
289	21	$\frac{3}{21}$	56			72	24	44
290	29	$\frac{4}{29}$						
291	15	$\frac{2}{15}$	40			48	44	
292	21	$\frac{3}{21}$	28			48	24	44
293	15	$\frac{2}{15}$	48	32	40	56		
294	21	$\frac{3}{21}$	24			48	24	44
295	15	$\frac{2}{15}$	48			32	44	
296	37	$\frac{5}{37}$						
297	33	$\frac{4}{33}$	28	48	24	56		
298	21	$\frac{3}{21}$	28			72	24	44
299	23	$\frac{3}{23}$	24			24	56	
300	15	$\frac{2}{15}$						

TABLE I.—(*Continued.*)

Number of Divisions.	Index Circle.	Number of Turns of Index.	Gear *m*.	Gear *k*.	Gear *j*.	Gear *k*.	Idler *k*.	Idler *l*.	Number of Divisions.	Index Circle.	Number of Turns of Index.	Gear *m*.	Gear *k*.	Gear *j*.	Gear *k*.	Idler *k*.	Idler *l*.
301	43	$\frac{6}{43}$	24			48	24	44	331	16	$\frac{2}{16}$	64	44	24	48		24
302	16	$\frac{2}{16}$	32			72	24		332	16	$\frac{2}{16}$	32			48	24	44
303	15	$\frac{2}{15}$	72	24	40	48		24	333	18	$\frac{2}{18}$	24			72	44	
304	16	$\frac{2}{16}$	24			48	44		334	16	$\frac{2}{16}$	32			56	24	44
305	15	$\frac{2}{15}$	48			32	24	44	335	33	$\frac{4}{33}$	72	48	44	40		24
306	15	$\frac{2}{15}$	40			32	24	44	336	16	$\frac{2}{16}$	32			64	24	44
307	15	$\frac{2}{15}$	72	48	40	56		24	337	43	$\frac{5}{43}$	86	40	32	56		
308	16	$\frac{2}{16}$	32			48	44		338	16	$\frac{2}{16}$	32			72	24	44
309	15	$\frac{2}{15}$	40			48	24	44	339	18	$\frac{2}{18}$	24			56	44	
310	31	$\frac{4}{31}$							340	17	$\frac{2}{17}$						
311	16	$\frac{2}{16}$	64	24	24	72			341	43	$\frac{6}{43}$	86	24	32	40		
312	39	$\frac{5}{39}$							342	18	$\frac{2}{18}$	32			64	44	
313	16	$\frac{2}{16}$	32			28	56		343	15	$\frac{2}{15}$	40	64	24	86		24
314	16	$\frac{2}{16}$	32			24	56		344	43	$\frac{5}{43}$						
315	16	$\frac{2}{16}$	64			40	24		345	18	$\frac{2}{18}$	24			40	56	
316	16	$\frac{2}{16}$	64			32	44		346	18	$\frac{2}{18}$	72	56	32	64		
317	16	$\frac{2}{16}$	64			24	44		347	43	$\frac{5}{43}$	86	24	32	40		24
318	16	$\frac{2}{16}$	56	28	48	24			348	18	$\frac{2}{18}$	24			32	56	
319	29	$\frac{4}{29}$	48	64	24	72		24	349	18	$\frac{2}{18}$	72	44	24	48		
320	16	$\frac{2}{16}$							350	18	$\frac{2}{18}$	72	40	32	64		
321	16	$\frac{2}{16}$	72	24	64	24		24	351	18	$\frac{2}{18}$	24			24	56	
322	23	$\frac{3}{23}$	32			64	24	44	352	18	$\frac{2}{18}$	72	24	24	64		
323	16	$\frac{2}{16}$	64			24	24	44	353	18	$\frac{2}{18}$	72			56	24	
324	16	$\frac{2}{16}$	64			32	24	44	354	18	$\frac{2}{18}$	72			48	24	
325	16	$\frac{2}{16}$	64			40	24	44	355	18	$\frac{2}{18}$	72			40	24	
326	16	$\frac{2}{16}$	32			24	24	44	356	18	$\frac{2}{18}$	72			32	24	
327	16	$\frac{2}{16}$	32			28	24	44	357	18	$\frac{2}{18}$	72			24	44	
328	41	$\frac{5}{41}$							358	18	$\frac{2}{18}$	72	32	48	24		
329	16	$\frac{2}{16}$	64	24	24	72		24	359	43	$\frac{5}{43}$	86	48	32	100		24
330	33	$\frac{4}{33}$							360	18	$\frac{2}{18}$						

4. Explanation of the Index Table.—In the first column is the number of divisions that it is desired to space on the index head, or, in other words, the number of movements to be made in rotating the work once. In the next column is the number of holes in the index circle that should be used to obtain the number of divisions indicated in the same horizontal line in the first column. In the third column, in the same horizontal line as the first two numbers, is a number indicating the number of turns of the index crank. This number may be a whole number, a fraction, or a whole number and a fraction. In case a fraction is used, the denominator expresses the number of holes in the index circle used and the numerator the number of holes the index crankpin is to be set over at each move. In the other six columns are numbers representing the number of teeth in the gear that will be used in the position indicated by the letter at the head of the column, which refers to the position of the gears as shown in Fig. 1. When no number is given in any one of the six spaces, no gear is to be used in the position indicated at the head of the column. In other words, use only those gears specified by the number of teeth. Where there is no gear in any of the six columns, the indexing is simple and the index dial remains stationary. In every such case 40 divided by the number in the third column, that is, the number of turns or fractional part of a turn the index crank makes, will give the number of divisions in the first column.

Whenever gears are to be used, as shown in the table, the indexing is differential, and 40 divided by the number will not give the number of divisions in the first column. The index-reckoning number already explained can be obtained at any time, however, by following the gears through from the gear *h* on the spindle and finding out how many turns the index dial makes to each turn of the spindle and in which direction. Knowing that *h* turns with the spindle, or turns once while the crank rotates 40 times, if the index dial turns in the same direction as the index crank, subtract the number of turns the dial makes from 40; if in the opposite direction,

add. When the index-reckoning number has been obtained, it can be used in the manner previously explained. It is not, however, necessary to find the index-reckoning number in order to use the table; all that is necessary is to place the gears on the shaft where they belong, use the proper index dial, draw out the index stop-pin, and space off the number of holes given in the third column, as in simple indexing.

FRACTIONAL INDEXING.

5. Introduction.—By means of compound or differential indexing a great many divisions can be obtained, but in some cases neither can be used, or at least not to advantage. The method of differential indexing with the special spiral head is open to the objection that it requires a gear on the spindle in the head and hence it is only possible to use this device when the spindle is horizontal. The method of differential indexing with the back pin is limited in its application on account of the fact that the choice of index circles is limited to those in a single plate.

The essential feature of the **fractional-indexing method** is the use of two index circles, one of which gives a means of obtaining a fraction of a space on the other circle. Divisions corresponding to any number divisible into two factors, which are also factors of two index-circle numbers but neither of which is a common factor of both circles, can be obtained by this method.

6. Description of Fractional Indexing.—Sometimes only one index plate is used, but generally two are required. Both plates are fastened on with the screws ordinarily used, but to get the two plates on at the same time it is necessary to face about $\frac{1}{16}$ inch off the shoulder of the sleeve carrying the plates and to omit the ordinary sector. This method may be used to advantage for obtaining a large number of divisions. For instance, to divide a circle into 2,160 parts on the Brown & Sharpe miller it is necessary to move the worm-shaft $\frac{40}{2160}$, or $\frac{1}{54}$, of a revolution for each division; but as 49 is the greatest number of holes in the

index plates of the machine, it is necessary to get indirectly the equivalent of this number of holes. $\frac{1}{54}$ is half of $\frac{1}{27}$, and hence it is necessary to move the index pin half a space on the *27* circle. This may be accomplished by placing the index plate with 20 holes in the outside row on the sleeve first, as shown at *b*, Fig. 3, and then putting on the plate *a* having a circle with 27 holes, the back pin *c* engaging the

FIG. 3.

circle of 20 holes, and the index pin *d* being adjusted to the *27* circle. When both pins are withdrawn, the index plates can be moved half a revolution, and the back pin again dropped into a hole, when the front pin will be half way between two holes, and by moving it to the first hole in advance of it gives the desired half of $\frac{1}{27}$, or $\frac{1}{54}$ of a turn.

To simplify the turning of the index plates, a gear may be placed on the shaft that turns the index plates when cutting spirals, and which is sometimes called the *gear on the*

worm-stud, and another gear *f*, with half as many teeth, on the idler stud. A pointer is fastened over this idler, and a tooth marked to indicate the movement. With both index pins removed, the index plates and gears are free to turn, and a revolution of the idler indicates the proper movement of the plates.

The application of the method to many cases where a relatively small number of divisions is required involves the same general method of procedure. For example, if 63 divisions are wanted, first get the factors 7 and 9; 7 is also a factor of 49, and this can be used for the back index circle; 9 is a factor of 18, and this can be used for the front circle. The fractional turn for the index crank is $\frac{40}{7} \times \frac{1}{9}$ or $\frac{80}{7} \times \frac{1}{18}$, which gives a movement for the crank of $11\frac{3}{7}$ holes, on the *18* row. $\frac{1}{7} \times 18 = \frac{18}{7} = 2\frac{4}{7}$, but $\frac{6}{7} \times 18 = \frac{108}{7} = 15\frac{3}{7}$. If, then, the index plates are turned $\frac{6}{7}$ of a revolution, the index pin *d*, which is stationary, will pass by $15\frac{3}{7}$ spaces. The 15 spaces are unimportant, but the $\frac{3}{7}$ is the fraction wanted for the crank movement, and a gear of 28 teeth on the worm and one of 24 teeth on the stud will indicate the movement of the plates.

In this case the movement of the plates is in the same direction as the crank, on account of the fact that the fractional remainder obtained from the movement of the index plates is also the desired fractional movement of the cranks. Sometimes, however, it is more convenient to move the plate in the opposite direction and use the difference between the fractional remainder and a whole space for the fractional turn of the crank. For example, if it is desired to obtain 77 divisions in which the factors are 7 and 11, the fractional turn is $\frac{120}{11} \times \frac{1}{21}$; $\frac{120}{11} = 10\frac{10}{11}$, and $\frac{1}{11} \times 21 = 1\frac{10}{11}$, but $\frac{1}{11}$ of a turn of the plates is inconvenient to indicate with the gears. If the plates are turned backwards $\frac{10}{11}$, the result is the same, for $\frac{10}{11} \times 21 = \frac{210}{11} = 19\frac{1}{11}$, which leaves $\frac{10}{11}$ of a space to turn the crank ahead.

A number that has a factor common to both index circles cannot be divided by this method. For example, $81 = 3 \times 27$, and $\frac{1}{3} \times 27 = 9$, so that if the plates are moved $\frac{1}{3}$ of a

revolution, the index pin will drop into another hole of the 27 circle, and nothing is gained by using the two plates.

The fractional turns obtainable by the back plate are halves, thirds, quarters, fifths, sevenths, elevenths, thirty-thirds, and forty-ninths, and the number of divisions that may be obtained ranges from 51 to 64,680.

The sector, ordinarily used for counting holes on the index plates, cannot be used when both plates are on, but one may be made with sheet-steel arms, each arm being riveted to a collar; one of these collars fits the index-plate sleeve and the other fits the outside of the first collar. The outer collar is split so as to clamp on the inner one. This sector is shown at *g* and *i*, Fig. 3. One of the arms *i* has the end bent over, forming a spring resting on the outside of the index plate, which holds the sector in place after it is adjusted. When the sector is in use the index pin is first drawn out, the index plates are then moved and locked in place by the back pin *c*. The index pin *d* is then released and allowed to rest against the plate, for it is not in the right position to enter a hole; one arm of the sector is then moved into contact with the pin, when the other arm will indicate the hole to which the pin is to be moved. In Fig. 3 the machine is set up to cut a 51-tooth gear.

7. Explanation of Table for Fractional Indexing.—In Table II is given the number of divisions from 51 to 400 that are obtainable by this method. The method is equally applicable for many higher numbers. In the table, the minus sign before the fractional turn of the plates indicates that the plates are to be moved in the direction opposite to that of the crank.

In some cases the idler gear can have more than one tooth marked, so as to obtain $\frac{1}{2}$, $\frac{1}{3}$, $\frac{1}{4}$, or other required parts of a revolution, and by this means all the movements required in the table can be obtained with the gears belonging to the machine, with the single addition of a 44-tooth gear. In the table, the first column contains the number of divisions obtainable; the second column, the fractional turn of the

TABLE II.

FRACTIONAL INDEXING.

Number of Divisions.	Fractional Turn of Crank.	Holes on Outside Plate.		Number of Holes on Inside Plate.	Fractional Turn of Plates.	Gear on		Revolutions of Stud Gear.
		Number in Circle.	Move.			Worm.	Stud.	
51	$\frac{40}{3} \times \frac{1}{17}$	17	$13\frac{1}{3}$	33	$-\frac{1}{3}$	72	24	1
57	$\frac{40}{3} \times \frac{1}{19}$	19	$13\frac{1}{3}$	33	$+\frac{1}{3}$	72	24	1
63	$\frac{80}{7} \times \frac{1}{18}$	18	$11\frac{3}{7}$	49	$+\frac{6}{7}$	28	24	1
69	$\frac{40}{3} \times \frac{1}{23}$	23	$13\frac{1}{3}$	33	$-\frac{1}{3}$	72	24	1
77	$\frac{120}{11} \times \frac{1}{21}$	21	$10\frac{10}{11}$	33	$-\frac{10}{11}$	44	40	1
87	$\frac{40}{3} \times \frac{1}{29}$	29	$13\frac{1}{3}$	33	$-\frac{1}{3}$	72	24	1
93	$\frac{40}{3} \times \frac{1}{31}$	31	$13\frac{1}{3}$	33	$+\frac{1}{3}$	72	24	1
96	$\frac{20}{3} \times \frac{1}{16}$	16	$6\frac{2}{3}$	33	$-\frac{1}{3}$	72	24	1
99	$\frac{80}{11} \times \frac{1}{18}$	18	$7\frac{3}{11}$	33	$+\frac{2}{11}$	44	24	$\frac{1}{3}$
102	$\frac{20}{3} \times \frac{1}{17}$	17	$6\frac{2}{3}$	33	$+\frac{1}{3}$	72	24	1
111	$\frac{40}{3} \times \frac{1}{37}$	37	$13\frac{1}{3}$	33	$+\frac{1}{3}$	72	24	1
112	$\frac{40}{7} \times \frac{1}{16}$	16	$5\frac{5}{7}$	49	$+\frac{6}{7}$	28	24	1
114	$\frac{20}{3} \times \frac{1}{19}$	19	$6\frac{2}{3}$	33	$-\frac{1}{3}$	72	24	1
119	$\frac{40}{7} \times \frac{1}{17}$	17	$5\frac{5}{7}$	49	$+\frac{4}{7}$	56	32	1
123	$\frac{40}{3} \times \frac{1}{41}$	41	$13\frac{1}{3}$	33	$-\frac{1}{3}$	72	24	1
126	$\frac{40}{7} \times \frac{1}{18}$	18	$5\frac{5}{7}$	49	$+\frac{3}{7}$	56	24	1
129	$\frac{40}{3} \times \frac{1}{43}$	43	$13\frac{1}{3}$	33	$+\frac{1}{3}$	72	24	1
133	$\frac{40}{7} \times \frac{1}{19}$	19	$5\frac{5}{7}$	49	$-\frac{6}{7}$	28	24	1
138	$\frac{20}{3} \times \frac{1}{23}$	23	$6\frac{2}{3}$	33	$+\frac{1}{3}$	72	24	1
141	$\frac{40}{3} \times \frac{1}{47}$	47	$13\frac{1}{3}$	33	$+\frac{1}{3}$	72	24	1
147	$\frac{40}{3} \times \frac{1}{49}$	49	$13\frac{1}{3}$	33	$-\frac{1}{3}$	72	24	1
154	$\frac{60}{11} \times \frac{1}{21}$	21	$5\frac{5}{11}$	33	$+\frac{6}{11}$	44	24	1
161	$\frac{40}{7} \times \frac{1}{23}$	23	$5\frac{5}{7}$	49	$+\frac{6}{7}$	28	24	1
174	$\frac{20}{3} \times \frac{1}{29}$	29	$6\frac{2}{3}$	33	$+\frac{1}{3}$	72	24	1
175	$\frac{24}{7} \times \frac{1}{15}$	15	$3\frac{3}{7}$	49	$+\frac{3}{7}$	56	24	1
176	$\frac{40}{11} \times \frac{1}{16}$	16	$3\frac{7}{11}$	33	$+\frac{8}{11}$	44	32	1
186	$\frac{20}{3} \times \frac{1}{31}$	31	$6\frac{2}{3}$	33	$-\frac{1}{3}$	72	24	1
187	$\frac{40}{11} \times \frac{1}{17}$	17	$3\frac{7}{11}$	33	$+\frac{3}{11}$	44	24	$\frac{1}{2}$
189	$\frac{40}{7} \times \frac{1}{27}$	27	$5\frac{5}{7}$	49	$+\frac{2}{7}$	28	24	$\frac{1}{3}$
192	$\frac{10}{3} \times \frac{1}{16}$	16	$3\frac{1}{3}$	33	$+\frac{1}{3}$	72	24	1
198	$\frac{40}{11} \times \frac{1}{18}$	18	$3\frac{7}{11}$	33	$-\frac{10}{11}$	44	40	1

TABLE II.—(*Continued.*)

Number of Divisions.	Fractional Turn of Crank.	Holes on Outside Plate.		Number of Holes on Inside Plate.	Fractional Turn of Plates.	Gear on		Revolutions of Stud Gear.
		Number in Circle.	Move.			Worm.	Stud.	
203	$\frac{40}{7} \times \frac{1}{29}$	29	$5\frac{5}{7}$	49	$+\frac{5}{7}$	56	40	1
204	$\frac{10}{3} \times \frac{1}{17}$	17	$3\frac{1}{3}$	33	$-\frac{1}{3}$	72	24	1
208	$\frac{30}{4} \times \frac{1}{39}$	39	$7\frac{1}{2}$	20	$+\frac{1}{2}$	48	24	1
209	$\frac{40}{11} \times \frac{1}{19}$	19	$3\frac{7}{11}$	33	$+\frac{5}{11}$	44	40	$\frac{1}{2}$
217	$\frac{40}{7} \times \frac{1}{31}$	31	$5\frac{5}{7}$	49	$+\frac{4}{7}$	56	32	1
222	$\frac{20}{3} \times \frac{1}{37}$	37	$6\frac{2}{3}$	33	$-\frac{1}{3}$	72	24	1
224	$\frac{20}{7} \times \frac{1}{16}$	16	$2\frac{6}{7}$	49	$+\frac{3}{7}$	56	24	1
228	$\frac{10}{3} \times \frac{1}{19}$	19	$3\frac{1}{3}$	33	$+\frac{1}{3}$	72	24	1
231	$\frac{40}{7} \times \frac{1}{33}$	33	$5\frac{5}{7}$	49	$-\frac{6}{7}$	28	24	1
238	$\frac{20}{7} \times \frac{1}{17}$	17	$2\frac{6}{7}$	49	$+\frac{2}{7}$	28	24	$\frac{1}{3}$
246	$\frac{20}{3} \times \frac{1}{41}$	41	$6\frac{2}{3}$	33	$-\frac{1}{3}$	72	24	1
252	$\frac{20}{7} \times \frac{1}{18}$	18	$2\frac{6}{7}$	49	$+\frac{5}{7}$	56	40	1
253	$\frac{40}{11} \times \frac{1}{23}$	23	$3\frac{7}{11}$	33	$+\frac{7}{11}$	44	28	1
255	$\frac{8}{3} \times \frac{1}{17}$	17	$2\frac{2}{3}$	33	$-\frac{1}{3}$	72	24	1
258	$\frac{20}{3} \times \frac{1}{43}$	43	$6\frac{2}{3}$	33	$+\frac{1}{3}$	72	24	1
259	$\frac{40}{7} \times \frac{1}{37}$	37	$5\frac{5}{7}$	49	$+\frac{6}{7}$	28	24	1
266	$\frac{20}{7} \times \frac{1}{19}$	19	$2\frac{6}{7}$	49	$+\frac{4}{7}$	56	32	1
272	$\frac{5}{2} \times \frac{1}{17}$	17	$2\frac{1}{2}$	20	$+\frac{1}{2}$	48	24	1
273	$\frac{40}{7} \times \frac{1}{39}$	39	$5\frac{5}{7}$	49	$+\frac{3}{7}$	56	24	1
275	$\frac{24}{11} \times \frac{1}{15}$	15	$2\frac{2}{11}$	33	$+\frac{6}{11}$	44	24	1
276	$\frac{10}{3} \times \frac{1}{23}$	23	$3\frac{1}{3}$	33	$-\frac{1}{3}$	72	24	1
282	$\frac{20}{3} \times \frac{1}{47}$	47	$6\frac{2}{3}$	33	$+\frac{1}{3}$	72	24	1
285	$\frac{8}{3} \times \frac{1}{19}$	19	$2\frac{2}{3}$	33	$-\frac{1}{3}$	72	24	1
287	$\frac{40}{7} \times \frac{1}{41}$	41	$5\frac{5}{7}$	49	$+\frac{2}{7}$	28	24	$\frac{1}{3}$
288	$\frac{10}{4} \times \frac{1}{18}$	18	$2\frac{1}{2}$	20	$+\frac{1}{2}$	48	24	1
294	$\frac{20}{3} \times \frac{1}{49}$	49	$6\frac{2}{3}$	33	$-\frac{1}{3}$	72	24	1
297	$\frac{40}{11} \times \frac{1}{27}$	27	$3\frac{7}{11}$	33	$+\frac{8}{11}$	44	32	1
301	$\frac{40}{7} \times \frac{1}{43}$	43	$5\frac{5}{7}$	49	$+\frac{5}{7}$	56	40	1
304	$\frac{5}{2} \times \frac{1}{19}$	19	$2\frac{1}{2}$	20	$+\frac{1}{2}$	48	24	1
308	$\frac{30}{11} \times \frac{1}{21}$	21	$2\frac{8}{11}$	33	$+\frac{8}{11}$	44	32	1
310	$\frac{4}{31} \times$	31						

TABLE II.—(*Continued.*)

Number of Divisions.	Fractional Turn of Crank.	Holes on Outside Plate.		Number of Holes on Inside Plate.	Fractional Turn of Plates.	Gear on		Revolutions of Stud Gear.
		Number in Circle.	Move.			Worm.	Stud.	
312	$\frac{5}{30} \times$	39						
315	$\frac{24}{7} \times \frac{1}{27}$	27	$3\frac{3}{7}$	49	$+\frac{4}{7}$	56	32	1
319	$\frac{40}{11} \times \frac{1}{29}$	29	$3\frac{7}{11}$	33	$-\frac{10}{11}$	44	40	1
320	$\frac{2}{16} \times$	16						
322	$\frac{20}{7} \times \frac{1}{23}$	23	$2\frac{6}{7}$	49	$+\frac{3}{7}$	56	24	1
328	$\frac{5}{41} \times$	41						
329	$\frac{40}{7} \times \frac{1}{47}$	47	$5\frac{5}{7}$	49	$-\frac{6}{7}$	28	24	1
330	$\frac{4}{33} \times$	33			$+\frac{1}{2}$			
336	$\frac{5}{2} \times \frac{1}{21}$	21	$2\frac{1}{2}$	20	$+\frac{1}{2}$	48	24	1
340	$\frac{2}{17} \times$	17						
341	$\frac{40}{11} \times \frac{1}{31}$	31	$3\frac{7}{11}$	33	$+\frac{2}{11}$	44	24	$\frac{1}{3}$
344	$\frac{5}{43} \times$	43						
345	$\frac{8}{3} \times \frac{1}{23}$	23	$2\frac{2}{3}$	33	$+\frac{1}{3}$	72	24	1
348	$\frac{10}{3} \times \frac{1}{29}$	29	$3\frac{1}{3}$	33	$-\frac{1}{3}$	72	24	1
350	$\frac{12}{7} \times \frac{1}{15}$	15	$1\frac{5}{7}$	49	$+\frac{5}{7}$	56	40	1
352	$\frac{20}{11} \times \frac{1}{16}$	16	$1\frac{9}{11}$	33	$+\frac{4}{11}$	44	32	$\frac{1}{2}$
360	$\frac{2}{18} \times$	18						
364	$\frac{30}{7} \times \frac{1}{39}$	39	$4\frac{2}{7}$	49	$+\frac{4}{7}$	56	32	1
368	$\frac{10}{4} \times \frac{1}{23}$	23	$2\frac{1}{2}$	20	$+\frac{1}{2}$	48	24	1
370	$\frac{4}{37} \times$	37						
372	$\frac{10}{3} \times \frac{1}{31}$	31	$3\frac{1}{3}$	33	$+\frac{1}{3}$	72	24	1
374	$\frac{20}{11} \times \frac{1}{17}$	17	$1\frac{9}{11}$	33	$+\frac{7}{11}$	44	28	1
376	$\frac{5}{47} \times$	47						
378	$\frac{20}{7} \times \frac{1}{27}$	27	$2\frac{6}{7}$	49	$-\frac{6}{7}$	28	24	1
380	$\frac{2}{19} \times$	19						
384	$\frac{5}{3} \times \frac{1}{16}$	16	$1\frac{2}{3}$	33	$-\frac{1}{3}$	72	24	1
385	$\frac{24}{11} \times \frac{1}{21}$	21	$2\frac{2}{11}$	33	$-\frac{2}{11}$	44	24	$\frac{1}{3}$
390	$\frac{4}{39} \times$	39						
392	$\frac{5}{49} \times$	49						
396	$\frac{20}{11} \times \frac{1}{18}$	18	$1\frac{9}{11}$	33	$+\frac{6}{11}$	44	24	1
400	$\frac{2}{20} \times$	20						

index crank necessary; the third column, the number of holes in the circle to be used on the outside plate; the fourth column, the number of holes the index pin is to be moved on the outside plate. The fraction, of course, is obtained by the movement of the back plate. The fifth column gives the number of holes in the circle to be used on the back plate. The sixth column gives the fractional turn necessary for the plates. In this case the direction is indicated by the sign before the number. The seventh and eighth columns give the gears necessary to indicate the fractional turn of the plates as given in the sixth column. The ninth column gives the number of turns that the gear on the stud must make to indicate the proper fraction of a turn for the index plates.

SPIRAL WORK.

GENERATION OF SPIRALS.

8. Combination of Movements. — If work held between centers, or in the chuck of a universal index head, is given a rotary motion and a motion of translation at the same time, while the relation between the two motions remains constant, a stationary point, in contact with the surface of the work, will trace a conical spiral or a helix, depending on whether the work is conical or cylindrical. In a milling machine, the motion of translation is the motion of the milling-machine table, which is caused by rotating the feed-screw either by the automatic feed or by hand. Now, if the feed-screw is connected by gear-wheels with the index-head spindle, it is evident that this spindle, and, hence, the attached work, will be rotated by any rotation of the feed-screw; since a rotation of the feed-screw causes a motion of translation of the milling-machine table, while the gearing insures a constant relation between the two motions, it follows that a milling cutter operating on the work will take a cut that follows a helical or conical spiral path.

9. Definitions. — In a spiral or helix, the distance advanced in 1 revolution, measured in the direction of the axis, is called the **pitch** of the spiral or helix, or, also, the **lead.** In milling-machine work, the lead is always expressed in inches, or in inches and fractional parts of an inch. In the best modern practice, the term *lead* is used in preference to *pitch*, and will, hence, be used here. It has become customary to limit the term pitch to small screws; while in its strict sense it means the distance that the screw will advance in 1 revolution, it has become the practice in some shops to apply it to the number of threads per inch of the screw. In order to prevent any confusion, the term *lead* will here be used exclusively, and will, when applied to a helix, spiral, or screw thread, always represent the distance advanced in one revolution.

10. Angle of Helix.—A helix is represented by the hypotenuse of a right-angled triangle having adjacent sides equal to the lead of the helix and to the circumference of a cylinder around which it is wound in such a position that the adjacent side representing the lead is in the same plane

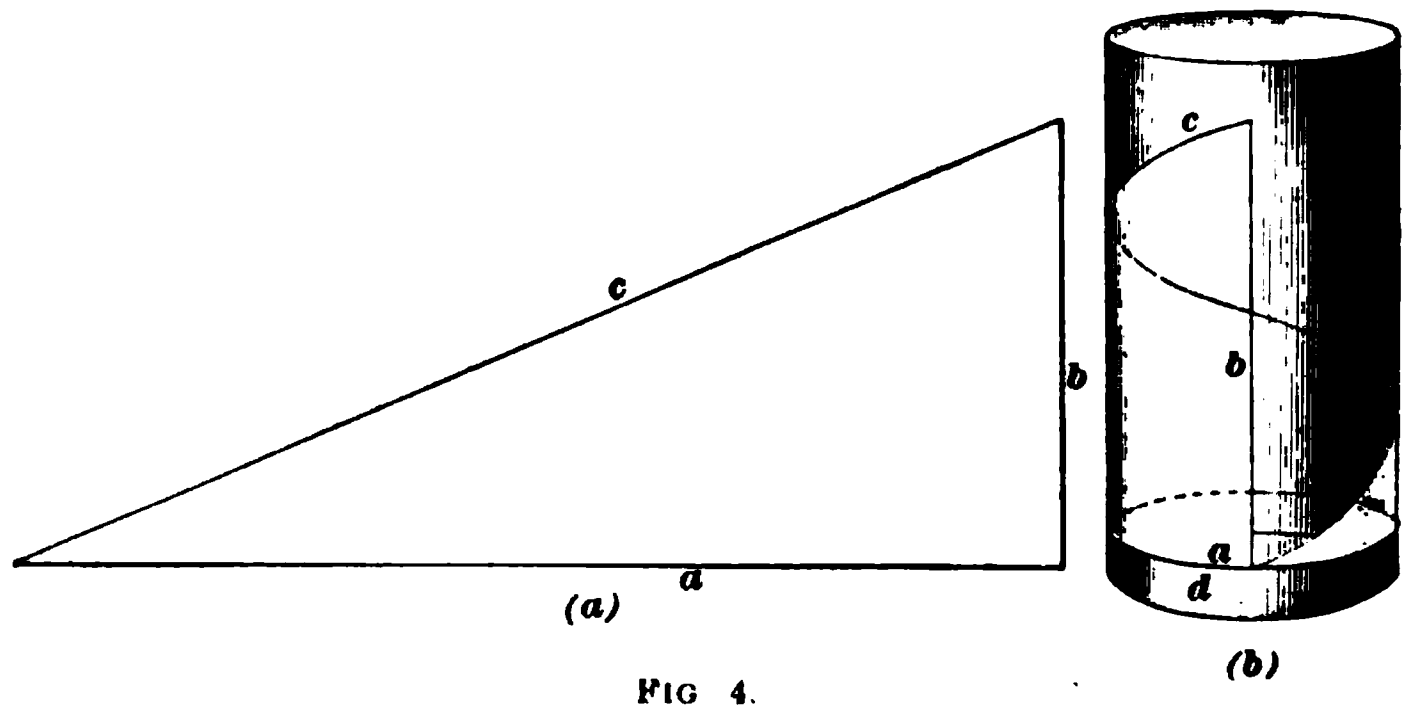

FIG 4.

as the axis. Thus, let Fig. 4 (*a*) represent a right-angled triangle cut out of paper, where the adjacent side *a* (one of the sides adjoining the right angle) is equal to the circumference of the cylinder *d* in Fig. 4 (*b*), and the adjacent side *b* is the lead. Then, when this triangle is wound

around d, as shown in Fig. 4 (b), the side c will form a helix having a diameter equal to d, and a lead b. The angle included between the sides b and c is called the **angle of the helix.**

11. From trigonometry, it follows that the tangent of the angle of the helix is equal to the circumference of the cylinder (the length of the side a of the triangle) divided by the lead. Hence the following rule:

Rule.—*Divide 3.1416 times the diameter of the helix by the lead. Take the corresponding angle from a table of natural tangents.*

EXAMPLE.—A helix $4\frac{1}{2}$ inches diameter has a lead of 16 inches; what is the angle of the helix?

SOLUTION.—Applying the rule just given, we get

$$\frac{4\frac{1}{2} \times 3.1416}{16} = .88358.$$

From a table of natural tangents, the corresponding angle is found to be 41° 28′, nearly. Ans.

12. It often occurs that it is required to find what lead of helix will give a certain angle of helix, the diameter of the helix being known. This may be calculated by the following rule:

Rule.—*Divide 3.1416 times the diameter of the helix by the tangent of the given angle.*

EXAMPLE.—A helix is to have an angle of helix of 30° 45′ for a diameter of $3\frac{1}{4}$ inches. What is the lead of the helix?

SOLUTION.—From a table of natural tangents, the tangent corresponding to 30° 45′ is .59494. Applying the rule just given, we get

$$\frac{3.1416 \times 3\frac{1}{4}}{.59494} = 17.162 \text{ in. Ans.}$$

The two rules just given apply to helixes only, and should not be applied to conical spirals. In a conical spiral, the angle of the spiral changes continually throughout its length; it is smallest at the small end of the spiral and largest at the large end.

The rate at which the angle changes in a conical spiral depends on the angle included between the sides of the cone; when this angle is very small, i. e., when the cone is almost a cylinder, the change in the angle of the spiral is extremely small, but it rapidly becomes larger as the angle included between the sides of the cone becomes greater.

13. Connecting Index-Head Spindle and Feed-Screw.—There are many ways in which the feed-screw and index-head spindle may be connected together by gearing; since, in nearly all designs of universal index heads, the worm-shaft and the feed-screw are at right angles to each other, it is necessary in these designs to introduce a pair of miter gears, or bevel gears, or a pair of equivalent machine elements into the gear-train in order to allow the worm-shaft and feed-screw to be connected together by spur gearing.

Fig. 5 shows one of the simplest designs for connecting the feed-screw and index-head spindle together. The worm-shaft *a* carries a miter gear *b*, which, normally, is free on the worm-shaft. The index plate *c* is fastened to the hub of the miter gear *b*, and is ordinarily prevented from rotating by a stop-pin in the frame of the index head. The index crank *d* is attached to the worm-shaft. Now, if the stop-pin is withdrawn, and the latch pin is dropped into a hole of the index plate, the worm-shaft and the miter gear *b* are locked together, so that any motion transmitted to the miter gear will also be transmitted to the worm-shaft and then, through the intervention of the worm-wheel *e*, to the index-head spindle *f*. The miter wheel *b* meshes with a miter gear *g*, which is keyed to the shaft *h*; the first change gear *k* of the train of spur gearing connecting the spindle and feed-screw is attached to the other end of the shaft *h*. The first gear is usually called the **worm-gear,** from the fact that it operates the worm.

A spur gear *l*, known as the **feed-screw gear,** is placed on the feed-screw; the gears *k* and *l* are then connected together by the two gears *m* and *n* placed on the same sleeve, which is mounted on an adjustable stud fastened in

any suitable manner to the frame of the index head or the table of the machine. As a general rule, another stud is provided on which an idler can be placed This idler may be placed either between *k* and *m*, or *l* and *n*; it will not change the velocity ratio of the gear-train, but only the direction of the rotation of the index-head spindle, and,

FIG. 5.

hence, the direction of advance of the spiral. In most milling machines, the introduction of the idler will cause the production of a left-handed spiral; owing to the difference in construction of the various machines, it is better, however, to determine this separately for each machine than to rely on the presence of an idler as a guarantee of a left-handed spiral.

Since the index-head spindle and the feed-screw are positively connected together, the relation between the

rotation of the spindle and the advance of the table remains constant, and the resulting helix or spiral will have a uniform lead. Evidently, the lead can only be changed by changing the velocity ratio of the gears connecting the feed-screw and spindle; since all modern designs of milling machines have the gearing that connects the worm-shaft to the worm-gear *k* arranged in such a manner that it cannot be changed, it follows that different helixes or spirals can only be obtained by changing the gears *k*, *l*, *m*, and *n*. It is customary to call the gear *m* the **first gear on stud,** and the gear *n* the **second gear on stud.**

It will be observed that the change gears form a train of **compound gearing.** The reason for the almost universal adoption of compound gearing is to be found in the fact that, with a given number of change gears, a much larger range of combinations is possible than can be obtained with a single gear-train.

As previously stated, the index plate is locked to the worm-shaft and rotates with it during the cutting operation. Indexing is done after the completion of the cut and while the machine is standing still, first locking the index plate by inserting the stop-pin, and then turning the index crank the required number of turns. The index plate is now unlocked by pulling out the stop-pin, and the machine is ready for the next turn.

Fig. 6 shows a more complicated design of a gear-train for connecting the index-head spindle and feed-screw. This design was adopted by the maker of the particular style in which it is found because it allowed a very rigid and compact construction of the index head.

The worm-shaft *a* here carries a spur gear *b*, which can be, and is, locked to the worm-shaft by dropping the latch pin into one of the holes of the index plate *c*. The spur gear *b* meshes with an idler *d* carried on a stud; this idler in turn drives a spur gear *e*, which is keyed to one end of the shaft *f*. A spiral gear *g* is keyed to the other end of the shaft *f* and meshes with another similar spiral gear *h* keyed to a shaft *i*, which is at right angles to the worm-shaft, and,

hence, parallel to the feed-screw. The shaft *i* carries the gear on the worm-stud *k*, which meshes with the first gear *m* on the stud. The second gear *n* on the stud rotates with *m*

FIG. 6.

and meshes with the feed-screw gear *l*. In this gear-train, the gears *b*, *d*, *e*, *g*, and *h* cannot be changed; different spirals and helixes are produced by changing the change gears *k*, *l*, *m*, and *n*, as in the previous case.

CALCULATING THE CHANGE GEARS.

14. Lead of the Machine.—Assume that the machine is so constructed that 1 revolution of the worm-shaft will produce exactly 1 revolution of the gear on the worm-stud *k*,

Figs. 5 and 6, and let the change gears be such that 1 revolution of the feed-screw will produce exactly 1 revolution of the gear on the worm-stud, and, hence, of the worm-shaft *a*. Then, during 1 revolution of the feed-screw, the milling-machine table will advance a distance equal to the lead of the feed-screw, and, at the same time, the index-head spindle will be rotated a part of a turn given by the fraction $\frac{1}{\text{number of teeth in worm-wheel}}$. To make 1 complete revolution of the index-head spindle, the feed-screw must make a number of turns equal to the number of teeth in the worm-wheel. The distance that the table will advance, which is the lead of the helix produced under the assumed conditions, is given by the product obtained by multiplying the lead of the feed-screw by the number of teeth in the worm-wheel. This particular distance is called the **lead of the machine.**

Now, suppose that the worm-shaft *a*, Figs. 5 and 6, is so connected to the gear on the worm-stud *k* that 1 revolution of the worm-shaft does *not* produce 1 revolution of the gear on the worm-stud. Then, the distance that the table advances during 1 revolution of the index-head spindle is no longer given by multiplying the number of teeth of the worm-wheel by the lead of the feed-screw. The rule for this case becomes as follows:

Rule.—*To find the lead of the machine, multiply the number of revolutions of the gear on the worm-stud that is required to produce 1 revolution of the index-head spindle by the lead of the feed-screw.*

EXAMPLE.—It having been found by actual count that 56 revolutions of the gear on the worm-stud are required to produce 1 revolution of the index-head spindle, and the feed-screw having a lead of $\frac{1}{4}$ inch, what is the lead of the machine?

SOLUTION.—Applying the rule just given, we get

$$56 \times \tfrac{1}{4} = 14 \text{ in.} \quad \text{Ans.}$$

The rule just given is general, since it takes in any case that is likely to arise, while the first one is limited to the

special case where the revolutions of the gear on worm-stud and worm-shaft are equal. For this reason, the lead of the machine should preferably be calculated by the general rule, which, incidentally, also takes account of the fact that the worm which meshes with the worm-wheel on the index-head spindle may be double-threaded.

15. Simple Gearing.—The lead of the spiral or helix having been given, the ratio between the revolutions of the gear on worm-stud and the revolutions of the feed-screw is

$$\frac{\text{lead of the spiral}}{\text{lead of the machine}}.$$

Then, for simple gearing it only remains to choose gears that have this ratio. This is most conveniently done by raising both terms of the ratio to higher terms that correspond with the teeth of the gears available.

EXAMPLE.—The lead of the required helix being 14 inches and the lead of the machine 10 inches, what gears may be used in simple gearing?

SOLUTION.—By the statement just given, the ratio is $\frac{14}{10}$. Since gears of 14 and 10 teeth are not usually available, multiply both terms, say, by 2. This gives $\frac{28}{20}$, or gears having 28 and 20 teeth. Multiplying by 3, we get $\frac{42}{30}$, or gears having 42 and 30 teeth. By still further raising the terms of the ratio to higher terms, other gears can be found that will give the required spiral. Ans.

The question of where each gear of the set is to be placed depends on the relation of the lead of the spiral to the lead of the machine. When the lead of the spiral is less than the lead of the machine, the gear on worm-stud must be the smaller gear of the two; when the lead of the spiral is greater than the lead of the machine, the gear on the worm-stud must be the larger of the two.

16. When the two change gears of the train of simple gearing are given, to find the spiral or helix that will be cut, the following rule may be used:

Rule.—*Multiply the number of teeth of the gear on worm-stud by the lead of the machine, and divide the product by the number of teeth of the feed-screw gear.*

EXAMPLE.—The gear on worm-stud having 48 teeth, and the feed-screw gear 100 teeth, what helix will be cut if the lead of the machine is 12 inches ?

SOLUTION.—Applying the rule just given, we get

$$\frac{48 \times 12}{100} = 5.76 \text{ in. Ans.}$$

17. Compound Gearing.—When the machine is compound-geared, the ratio $\frac{\text{lead of the spiral}}{\text{lead of the machine}}$ is the **compound ratio** of the gearing. This ratio must be resolved into factors that are raised to higher terms until they correspond with the number of teeth of gears that are available. For instance, let it be required to cut a spiral with a lead of 24 inches, the lead of the machine being 10 inches. Then, the compound ratio is $\frac{24}{10}$, which resolves into the factors $\frac{3}{2} \times \frac{8}{5}$. This means that two of the gears that mesh together must be in the proportion of 3 to 2, and the other two gears in the proportion of 8 to 5. Raising $\frac{3}{2}$ to a higher term by multiplying the numerator and denominator by any integral number, say 16, we get 48 and 32 teeth as the number of teeth of one pair of gears. Raising $\frac{8}{5}$ to higher terms by multiplying the numerator and denominator by any integral number, say 12, we get 96 and 60 for the other pair of gears. It is to be observed that there is not the slightest necessity of multiplying the terms of both factors by the same integral number; all that is required is that the two terms of each factor be multiplied by the same number. After factoring the ratio, the numerators of the factors will represent the driven wheels of the gear-train, and the denominators will represent the drivers.

18. The question of where each pair of meshing gears must be placed can easily be answered when it is considered that if the lead of the helix to be cut is smaller than the lead of the machine, the gear on worm-stud must run faster than the feed-screw gear. When the lead of the helix is greater

than the lead of the machine, the gear on worm-stud must run slower than the feed-screw gear.

19. When the lead of the spiral or helix is a whole number of inches, it is usually quite easy to factor the compound ratio. This factoring can sometimes be made easier by raising the ratio to a higher term by multiplying the numerator and denominator by some number. For instance, the ratio $\frac{17}{10}$ is rather difficult to factor as it stands, but by raising it to a higher term, say by multiplying by 4, we get $\frac{68}{40}$, which readily resolves into the factors $\frac{17}{20} \times \frac{4}{2}$, or $\frac{17}{2} \times \frac{4}{20}$, or $\frac{34}{8} \times \frac{2}{5}$, or $\frac{34}{5} \times \frac{2}{8}$.

Take, now, the case of a spiral having a lead expressed in whole inches and part of an inch, as, for instance, $14\frac{1}{4}$ inches. Let the lead of the machine be 12 inches. Then, the compound ratio is $\frac{14\frac{1}{4}}{12}$, which is a form in which it is rather difficult to factor. Now, suppose it is raised to a higher term, multiplying by a number that will make the numerator $14\frac{1}{4}$ a whole number. In this case, it is obvious that 4, or a multiple of 4, will be the number to use. Raising $\frac{14\frac{1}{4}}{12}$ to a higher term by multiplying the numerator and denominator by 4, we get $\frac{57}{48}$ as the compound ratio. This readily resolves into quite a number of factors, thus: $\frac{3}{4} \times \frac{19}{12}$, or $\frac{3}{12} \times \frac{19}{4}$, or $\frac{19}{6} \times \frac{3}{8}$, or $\frac{19}{8} \times \frac{3}{6}$, or $\frac{3}{16} \times \frac{19}{3}$, or $\frac{19}{16} \times \frac{3}{3}$, etc.

20. When it is not feasible to factor the compound ratio, or to get gear combinations that include available gears, the proper gear combination can often only be discovered by a method that may be aptly described as "cutting and trying." In many cases it is not possible to cut the required spiral at all, but the machine may often be geared to cut a spiral that approaches the desired spiral somewhat closely. Here the cut-and-try method must also be followed.

There are two methods of procedure that may be adopted; either three gears of the set are assumed and the fourth is

calculated, or a combination of four gears is selected and the resulting spiral or helix found by calculation.

When three gears of the set are assumed, the fourth may be calculated as follows :

Rule.—*Multiply the lead of the spiral or helix in inches by the number of teeth of the feed-screw gear and the first gear on stud. Divide the product by the product of the number of teeth of the second gear on stud and the lead of the machine in inches. The quotient will be the number of teeth of the worm-gear.*

EXAMPLE 1.—If the feed-screw gear has 40 teeth, the first gear on stud 32 teeth, the second gear on stud 56 teeth, the lead of the machine being 10 inches, and the helix to be cut being 28 inches, what should be the number of teeth of the worm-gear ?

SOLUTION.—Applying the rule just given, we get

$$\frac{28 \times 40 \times 32}{56 \times 10} = 64 \text{ teeth. Ans.}$$

EXAMPLE 2.—A spiral having a lead of 39 inches is to be cut. The feed-screw gear has 40 teeth, the first gear on stud 32 teeth, the second gear on stud 56 teeth, and the lead of the machine is 10 inches; what number of teeth should the gear on worm-stud have ?

SOLUTION.—Applying the rule given and substituting, we get

$$\frac{39 \times 40 \times 32}{56 \times 10} = 89\tfrac{1}{7} \text{ teeth.}$$

Since a gear with this number of teeth is an impossibility, the calculation shows that with the gears selected it is not possible to cut the required spiral. If a gear with 89 teeth is available, a fairly close approach to the required spiral may, however, be cut. Ans.

21. When the four gears and the lead of the machine are known, the resulting spiral or helix may be calculated as follows :

Rule.—*Multiply the lead of the machine by the number of teeth of the gear on worm-stud and the second gear on stud. Divide this product by the product of the number of teeth of the feed-screw gear and the first gear on stud.*

EXAMPLE.—In example 2 of Art. **20**, it was stated that a fair approximation to the required spiral might be cut with a gear on worm-stud having 89 teeth. Calculate the spiral that will actually be cut.

SOLUTION.—Applying the rule just given, we get

$$\frac{10 \times 89 \times 56}{40 \times 32} = 38.9375 \text{ in.} \quad \text{Ans.}$$

Special attention is called to the fact that it is a mathematical impossibility to calculate directly what the number of teeth of the four change gears should be to produce a given spiral.

Let n' = number of teeth in gear on worm-stud;
n = number of teeth in second gear on stud;
N' = number of teeth in feed-screw gear;
N = number of teeth in first gear on stud;
L = lead of machine;
S = lead of spiral or helix.

Then, the equation giving the relation is

$$S = \frac{n\,n'\,L}{N\,N'}.$$

In this equation there are four unknown quantities, viz., n, n', N, and N'. They are not known in terms of each other, i. e., their relation is unknown, and, hence, it is a mathematical impossibility to solve the equation for n, n', N, and N' without assigning values to at least three of these factors.

To sum up: When three gears are given, the fourth can readily be calculated, as has been shown. When the four gears are given, the resulting spiral or helix is easily computed. To discover the proper relation between the gears, factoring must be resorted to. When factoring fails, the cut-and-try method must be adopted and followed until either a correct gear combination or one that will give an approximation which is considered close enough is obtained.

CUTTING HELIXES AND SPIRALS.

22. Cutters and Profiles.—By far the greater part of the spiral work done in a milling machine consists of the cutting of helical and spiral grooves. Familiar examples of the class of work done are the fluting of helical-tooth reamers and of twist drills, the cutting of the spaces of helical-tooth milling cutters, the cutting of screw gears, etc.

With a helical or spiral groove, its profile (shape) is given by the intersection of the groove with a plane *perpendicular to the helix* or spiral, while with a straight groove that is parallel to the axis of the work, its profile is its intersection with a plane *perpendicular to the axis of the work.* This must be carefully borne in mind when selecting a cutter for a helical or spiral groove.

When the profile of the groove is symmetrical, it can be cut with either a suitable end mill or a formed cutter of the required shape, but when the groove has an unsymmetrical profile, an end mill cannot be used.

When an end mill is employed for cutting the groove, the table, when arranged to swivel, as is the case in horizontal universal milling machines, must be set to zero, i. e., so that its direction of motion is in a plane perpendicular to the axis of rotation of the cutter.

A formed milling cutter must be employed for unsymmetrical grooves, and can also be advantageously used for many symmetrical grooves. It requires the table to be set to an angle with the axis of rotation of the cutter that is equal to the difference between the angle of the helix and 90°. As a general rule, the graduations of a milling-machine table are so arranged that when the table is set so that the graduation reads to the angle of the helix, it will make the required angle to the axis of rotation of the cutter. A rule for calculating the angle of the helix has been previously given.

If the table is not set to the angle of the helix, the resulting groove will not have the same profile as the cutter

This fact can often be taken advantage of when a cutter of the right width is not available and the exact shape of the profile need not be particularly accurate.

23. Helical Grooves With Parallel Sides.—In milling a helical or spiral groove with the kind of plain cutter that will produce a straight groove with parallel sides, as a slitting saw, for instance, it will be found that the resulting groove will *not* have parallel sides, but will be about as shown, somewhat exaggerated, in Fig. 7 (*a*). From this fact, the conclusion is to be drawn that when a helical or spiral groove with parallel sides is to be cut, a face cutter cannot be employed; an end mill will, however, be found to answer for this purpose.

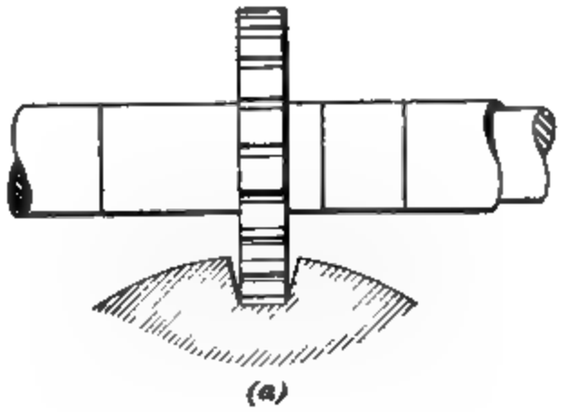

(*a*)

(*b*)

FIG. 7.

24. Helical Grooves With Inclined Sides.—When an attempt is made to cut an angular helical groove with a single-angle cutter, it will be found that the angle between the sides of the groove will not be equal to the angle of the cutter, but will be about as shown, somewhat exaggerated, in Fig. 7 (*b*). It will further be noticed that the side *a* of the groove is very rough compared with the side *b*, and that a decided burr is thrown up at *c*. From these facts, the conclusions are to be drawn that a single-angle cutter cannot reproduce its own profile and that cutting teeth lying

in a plane, as those on the right-hand side of the angular cutter shown, will not mill a smooth groove. The following general conclusions may also be drawn from the facts stated in this and the preceding article. No cutter, except an end mill, can reproduce its own profile in a spiral or helical groove when it has teeth on one or both sides that lie in a plane. From this it follows that any cutter, except an end mill, that is required to produce its own profile in a helical or spiral groove must be wider at the bottom than at the top of the teeth, and no teeth must lie in a plane. Hence, when angular grooves are to be milled, double-angle cutters should always be used; such cutters will reproduce their own profile, as shown in Fig. 8, and mill both sides of the groove smooth.

FIG. 8.

25. Helical Grooves With One Side Radial.—A great deal of the spiral work done with angular cutters requires one side of the groove to be radial. For this work, double-angle cutters must be selected, and they must be set sufficiently off center to make the required side of the groove radial when the cutter is sunk into the work to the proper depth. Referring to Fig. 9 (*a*), which shows a double-angle cutter sunk into the work until the side *a* of the groove is radial, the amount that the cutter must be set off center is the distance *b*. It can be readily shown that this distance varies with the depth of the cut; thus, in order that the side *a* may remain radial for a greater or smaller depth

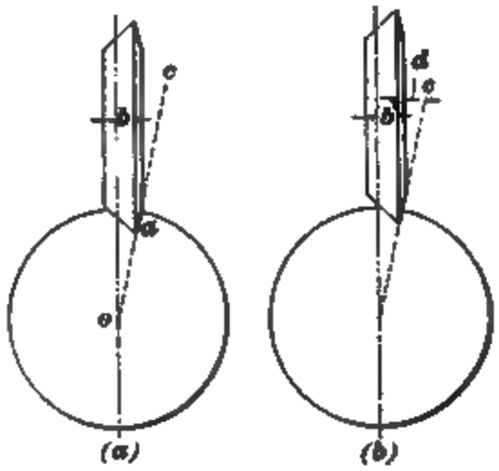

FIG. 9.

of cut, the cutter must evidently be shifted radially, that is, along the line *oc*. Then, for a smaller depth of cut, as shown in Fig. 9 (*b*), the distance *b'* that the cutter is off center will be greater than *b*, and for a greater depth of cut, this distance will be smaller.

The distance that the cutter is to be set off center is given correctly by the following rule:

Rule.—*Subtract the depth of the cut measured radially from the radius of the work and multiply the remainder by the sine of the angle included between that side of the cutter with which the radial side of the groove is to be cut and a plane perpendicular to the axis of the cutter, as the angle d in Fig. 9 (b).*

EXAMPLE.—The angle *d*, Fig. 9 (*b*), being 12°, how much should the cutter be set off center when the work is 3 inches in diameter and the radial depth of the cut .4 inch ?

SOLUTION.—From a table of natural sines, the sine of 12° is .20791. For the class of work usually done, it is near enough to call the sine .2. Applying the rule just given, we get

$$(\tfrac{3}{2} - .4) \times .2 = .22 \text{ in.} \quad \text{Ans.}$$

26. If the effect of the depth of the cut is left entirely out of consideration, the rule for setting the cutter off center becomes: *Multiply the diameter by half the sine of the angle d, Fig. 9 (b).* On this basis, the following approximate table has been calculated for the angles most commonly used for double-angle cutters.

The rules here given for the offset of double-angle cutters apply to straight grooves as well as to helical grooves. In the case of a helical groove, the cutter should be set correctly while the line of motion is at right angles to the axis of rotation of the cutter; the table is to be swiveled to the angle of the helix after setting the cutter off center.

27. Proper Direction of Rotation of Work.—In cutting helical grooves with double-angle cutters having unequal angles, the work should always revolve toward that side of the cutter where the teeth have the greater angle.

TABLE III.

TABLE SHOWING OFFSET OF DOUBLE-ANGLE CUTTERS.

Angle.	Offset.
12°	Diameter × .1
27½°	Diameter × .23
30°	Diameter × .25
40°	Diameter × .32
45°	Diameter × .35
48°	Diameter × .37
53°	Diameter × .4

Fig. 10 shows the four cases that arise in practice; in each case, the side *a* of the cutter has the greater angle, and the work should revolve toward it, or in the direction of the arrow *x*. This statement applies to right-handed and left-handed spirals and helixes; the direction of rotation that

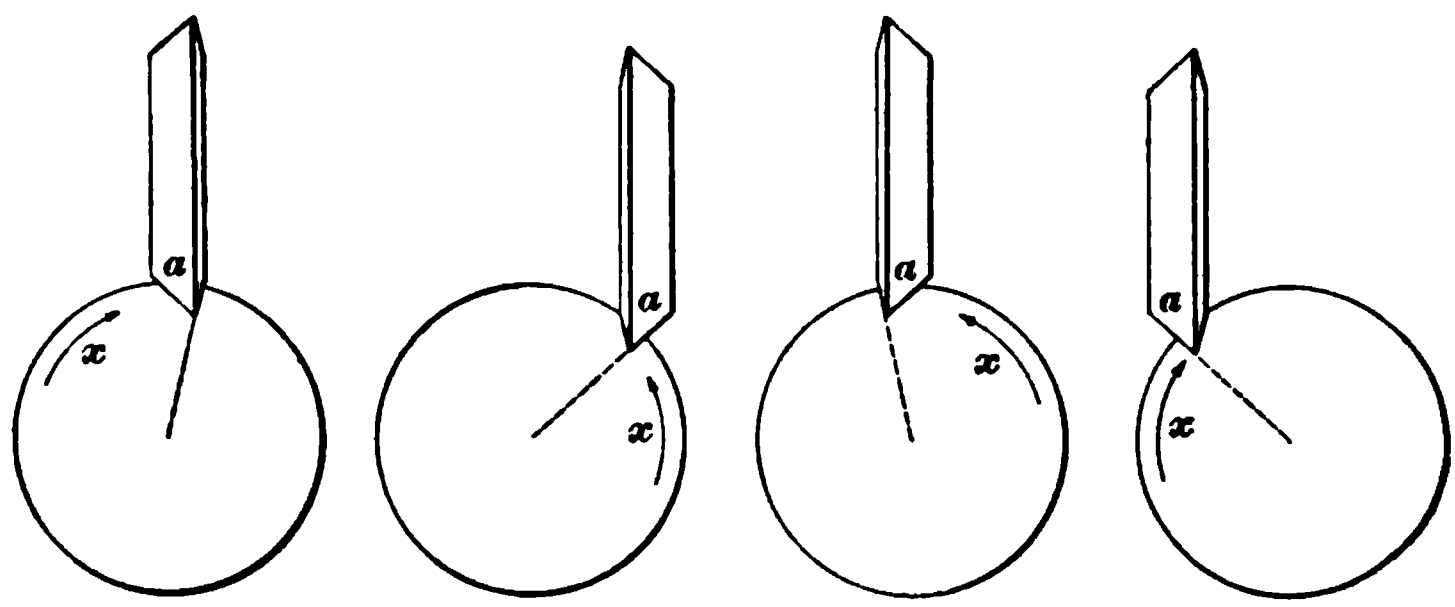

FIG. 10.

will bring the work toward the greater angle of the cutter can be secured by a proper arrangement of cutter and feed. The object of feeding the work toward the side of the cutter having the greater angle is to make the sides of the groove smooth; experience has shown that smooth sides cannot be obtained except by rotating the work in the manner stated.

Great care must be taken in all spiral work to confine the work in such a manner that it can neither slip in the direction of its axis nor slip about its axis. Should this happen, not only will the work be spoiled, but most likely the cutter and arbor also. When the cut has been completed, before running the table back, take the work away from the cutter, or vice versa, in order that the cutter may not drag in the groove, which will mar and score the latter.

THE NATURAL FUNCTIONS.

28. Definitions.—In any circle, as in *a*, Fig. 11, draw any two radii, as *o b* and *oc*, so that the angle *c o b* included between them is less than 90°. From the intersection *c* of the radius *oc* with the circle, drop a perpendicular *c d* on *o b*. Prolong *oc*, and at *b* erect a perpendicular to *o b* which will be tangent to the circle, prolonging the perpendicular until it intersects *o c* prolonged in *e*.

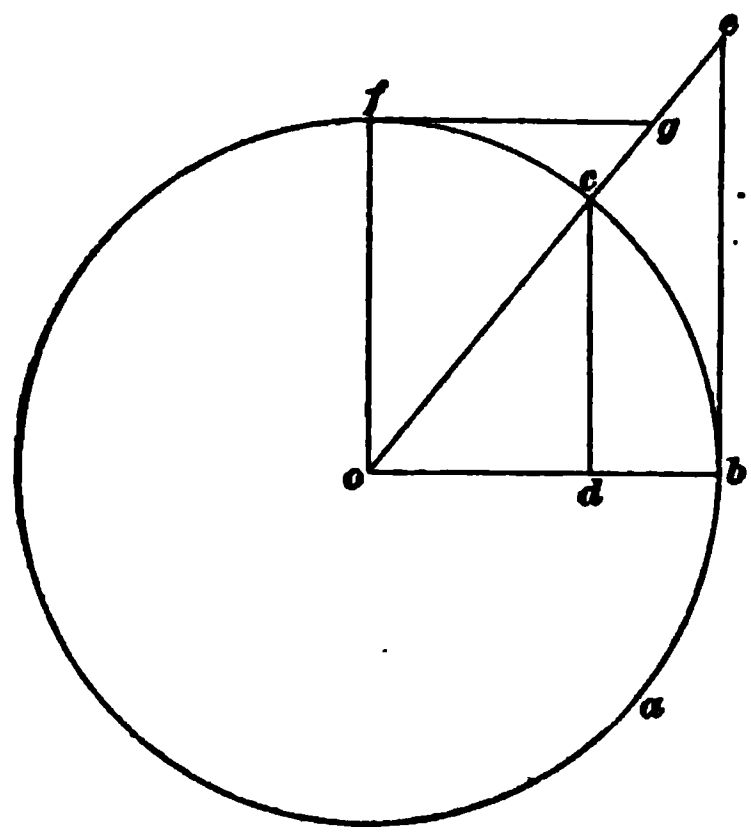

FIG. 11.

The line *c d* is called the **sine** of the angle *c o b* and is abbreviated to *sin;* the line *o d* is called the **cosine** of the angle *c o b* and is written *cos;* the line *d b* is called the **versed sine** of the angle *c o b* and is written *versin;* the line *b e* is called the **tangent** of the angle *c o b* and is written *tan.*

From the center *o* of the circle, draw a radius *o f* at right angles to *o b*. Then, the angle *f o c* is called the **complement** of the angle *c o b*, and, evidently, is equal to the difference between *c o b* and 90°. Draw a line tangent to the circle at *f*, i. e., perpendicular to *o f*, and extend it until it intersects *o c* prolonged at *g*. The line *f g* is then

the tangent of the complement of the angle *c o b*, and is called the **cotangent** of the angle *c o b*. It is written *cot*.

All these lines are called **functions of the angle**; their relative lengths vary with the magnitude of the angle *c o b*, but the ratio between their lengths and the length of the radius remains constant for a given angle, no matter what the radius may be.

Tables have been prepared in which the ratio of the lengths of the different functions to the radius for all angles between 0° and 90° is given on the assumption that the length of the radius is unity (1). Hence, if the length of any other radius is given, the length of the corresponding function can always be found by multiplying the value of the function for a radius of unity, as taken from the table, by the given radius.

Such tables are called **tables of natural functions,** and those most frequently used are given at the end of this volume. Tables of versed sines are not given, but the versed sine of any angle can be found by subtracting the value of the cosine of the angle, as taken from the tables, from 1.

29. Use of the Tables.—To find a function of an angle less than 45°, look for the number corresponding to the degrees of the angle in the horizontal row at the top of the page. Look for the minutes in the first vertical column at the left and follow it over to the right until the vertical column marked with the number of degrees is reached. The value of the function will be found there.

EXAMPLE.—Find the cosine of 41° 27′.

SOLUTION.—The column containing the values of cosines between 41° and 42° is found to be the second column on page 9 of the tables. Opposite 27′ and in the second column, we find .74953 as the value of the cosine. Ans.

To find the value of a function of an angle larger than 45°, look for the number of degrees in the bottom horizontal column. Look for the minutes in the right-hand vertical column; follow the horizontal column thus found to the left

until the column containing the degree is reached. The value of the function will be found there.

EXAMPLE.—Find the tangent of 59° 36′.

SOLUTION.—The vertical column containing tangents between 59° and 60° is found to be the first column on page 16 of the tables of natural tangents. Opposite 36′ in the right-hand vertical column, we find, in the first column of tangents, the value 1.70446. Ans.

30. To find the angle when the value of a function is given, look first in the columns marked on top to correspond with the function until the nearest value is found. The number of degrees will be found on top of that column and the number of minutes in the first vertical column at the left.

When the value of the function cannot be found thus, it shows that the corresponding angle is greater than 45°. Hence, look in the columns marked at the bottom to correspond with the function until the nearest value is found; the degrees will be found at the bottom of the column and the minutes in the right-hand vertical column.

EXAMPLE 1.—What angle corresponds with a sine having a value of .23457?

SOLUTION.—On page 3 of the tables of sines, in the column headed 13°, we find the value .23458. In the first column on the left hand, we find 34′; hence, the angle is 13° 34′, very nearly. Ans.

EXAMPLE 2.—What angle corresponds with a tangent having a value of 1.23214?

SOLUTION.—Since this value cannot be found in the columns marked "Tangent" at the top, we must look for it in those marked "Tangent" at the bottom. In the column marked 50° at the bottom, on page 17 of the tables, we find the nearest tangent 1.23196, and in the right-hand column 56′. Hence, the angle nearest to the given tangent is 50° 56′. Ans.

MILLING-MACHINE WORK.

(PART 5.)

USE OF MILLING MACHINE.

SPECIAL MILLING ATTACHMENTS.

1. Purpose of Attachments.—The range of work for which a milling machine is adapted can be greatly extended by means of special attachments. Those in most common use are: circular milling attachments, which are used chiefly in vertical milling machines for the production of about the same kind of work that can be done in a lathe; vertical milling attachments, for converting a horizontal milling machine temporarily into a vertical machine; and cam-cutting attachments, for milling cams to a definite shape by the aid of a master cam. A milling attachment is occasionally applied to a planer, thus converting it into a milling machine.

The list of special milling attachments in use is by no means exhausted by those just enumerated, since they may take almost any conceivable form suitable for the purpose for which they are intended. Few, if any, of these special attachments embody features that call for a description; most of them are simple modifications of those previously enumerated, and have been designed to meet special conditions and requirements.

2. Circular Milling Attachment. — A common form of circular milling attachment is shown in Fig. 1. It

For notice of copyright, see page immediately following the title page.

consists of a circular table *a* fitted to the base *b* in such a manner that it can be rotated about its axis. For this purpose, a worm-wheel is placed inside of the base which is attached to the table; a worm, operated by the hand wheel *c*, meshes with the worm-wheel and serves to rotate the table.

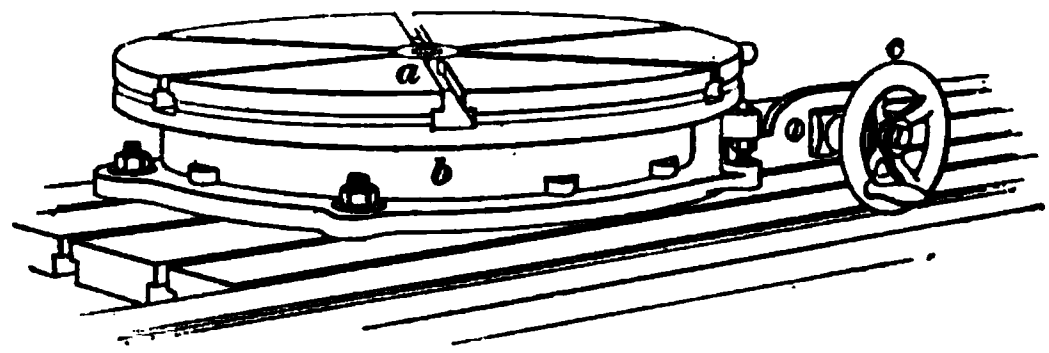

FIG. 1.

The particular form of rotary milling attachment here shown is only intended to be rotated by hand; such attachments are often fitted with an automatic feed, however, that can be adjusted to start and stop at any point.

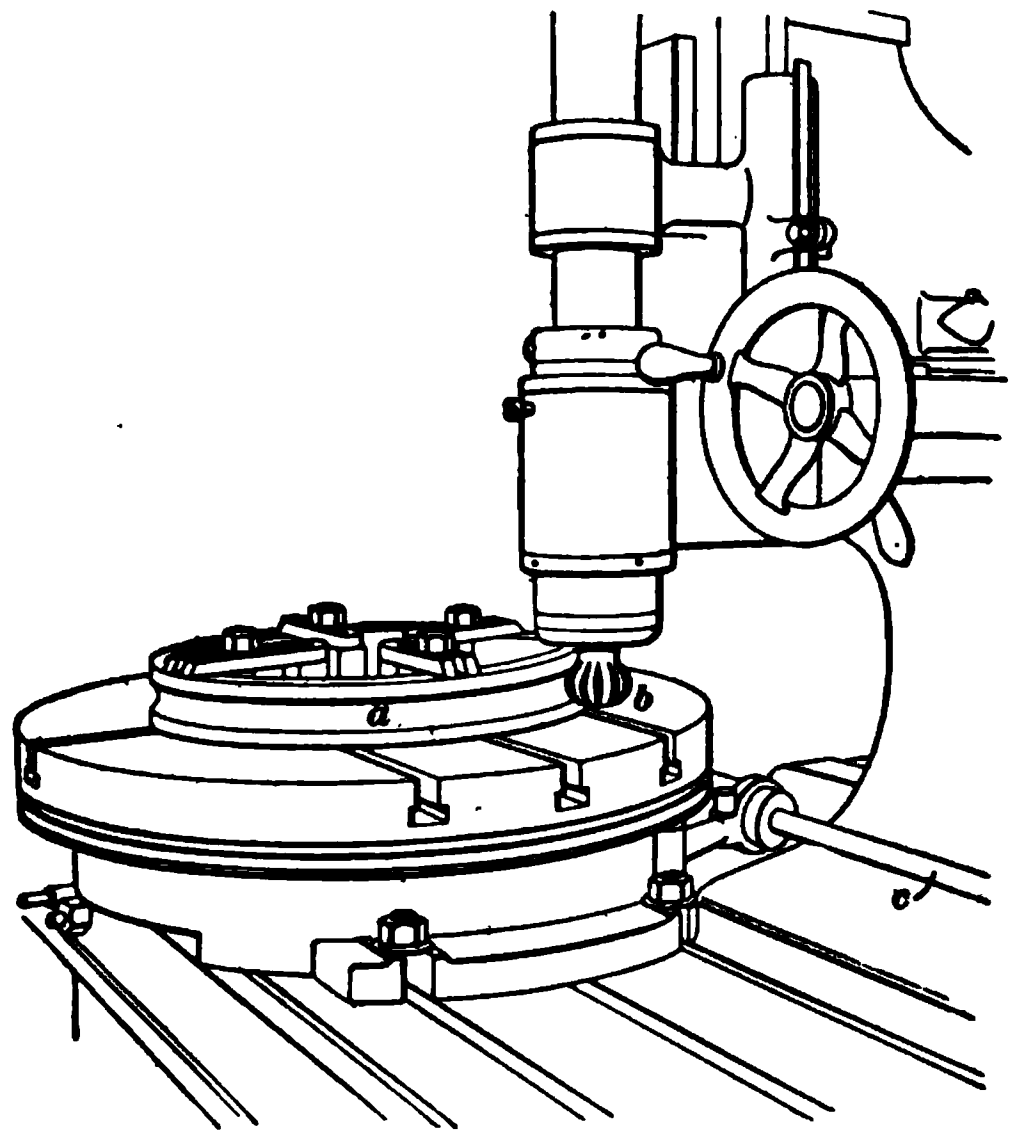

FIG. 2.

3. Fig. 2 shows an application of a circular milling attachment differing slightly from that shown in Fig. 1. In this case, the work *a* is a worm-wheel blank that is being

grooved around its circumference preparatory to cutting the teeth. A form cutter *b* is used for grooving. This job might be done in the lathe; experience, however, has shown that the work can be done as well, and much faster, in the milling machine. An automatic feed is of decided advantage for work that is to be milled around its entire periphery, or the greater part of it; in the attachment shown, the shaft *c*, which carries the worm, is automatically rotated by the feed mechanism.

4. The class of work that may be done with the aid of a circular milling attachment does not differ in general from that which can be done in a lathe. In addition, some circular work can be done for which the lathe is not at all adapted, as, for instance, finishing between the spokes on the inside of the rim of hand wheels, and the cutting of circular slots closed at both ends.

5. Vertical Milling Attachment.—For many classes of milling, a vertical milling machine is of advantage chiefly on account of the fact that the operator is better able to see the cut. In order to obtain this benefit from a horizontal machine, it may be fitted with a suitable device for transforming it, for the time being, into a vertical spindle machine. While such an attachment cannot be expected to have as large a range as a vertical milling machine, it will greatly extend the range of a horizontal machine, and if properly designed, will allow work to be performed that cannot be done otherwise except by a special machine, such as the cutting of relatively long racks, the cutting of helixes having a very large angle of helix, the sawing off of stock too long to go into the machine in the ordinary way, that is, placed parallel to the spindle, and similar work.

6. Fig. 3 shows one form of a vertical milling attachment. It consists of a frame *a*, which carries a central shaft fitted to the hole of the milling spindle and inserted therein. The frame of the attachment is secured to the frame of the machine in such a manner that it can be turned completely

about the axis of the horizontal shaft, and can be rigidly clamped in any position. The vertical spindle *b* is carried in bearings at the outer end of the frame; being at right

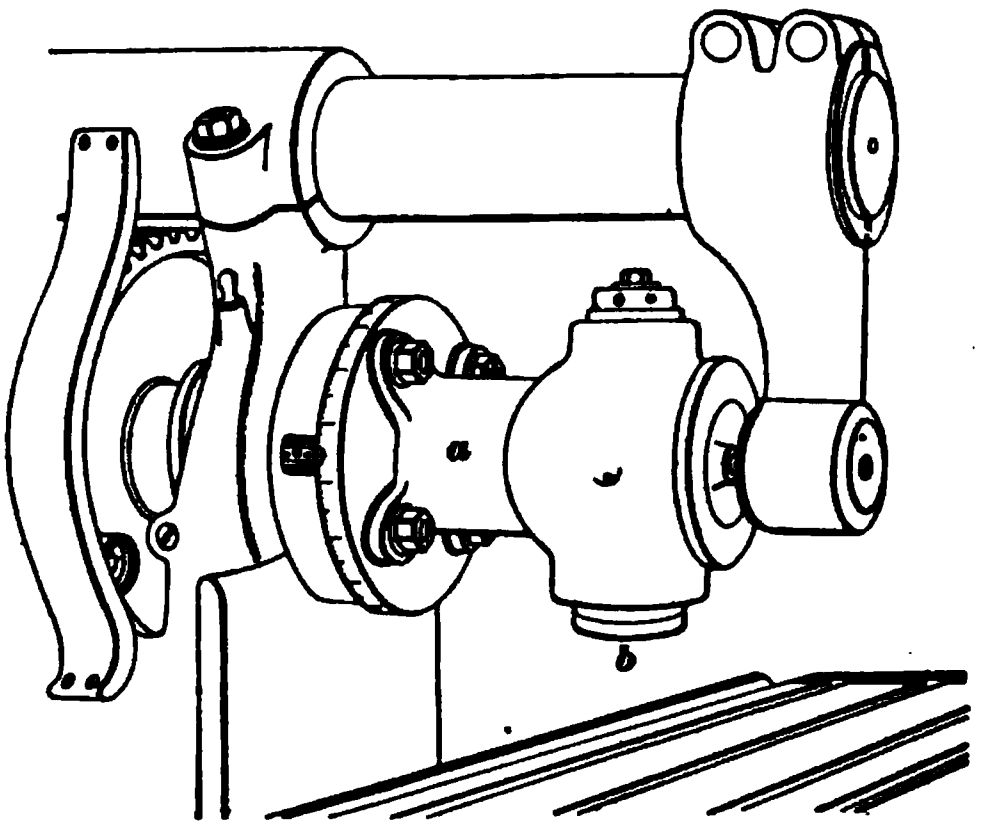

FIG. 8.

angles to the horizontal spindle, it is driven either by bevel gears or by screw gears, in this particular case being driven by the former.

7. The frame of the attachment is graduated to degrees, and a zero mark placed on the frame of the machine indicates, by its coincidence with the zero of the graduation, when the spindle is vertical; i. e., at right angles, in a vertical plane, to the horizontal line of motion. From this it follows that in this position any end mill will cut a horizontal surface parallel to the line of motion, and any plain mill or formed mill will cut in a vertical plane parallel to the line of motion. By swiveling the frame of the attachment so that the spindle becomes horizontal, i. e., lies in a plane parallel to the line of motion, vertical surfaces can be cut with an end mill, and horizontal cuts at right angles (or in case of a table arranged to swivel, at various angles) to the line of motion of the table can be taken.

8. A vertical milling-machine attachment of the kind shown can be used for helixes in three ways, two of which

incidentally adapt it to cases where the table cannot be conveniently swiveled. In the first place, the attachment may be rotated about its axis to suit the angle of the helix; that is, it may be set so that the spindle of the attachment makes a vertical angle with the line of motion of the table equal to the difference between the angle of the helix and 90°. A plain mill or formed mill attached to an arbor is then used, and the cut is taken on the *side* of the work.

In the second place, the attachment may be set with its spindle parallel to the line of motion, that is, horizontal. In that case, the milling-machine table must be set over until its graduation indicates an angle equal to the difference between the angle of the helix and 90°. Using a plain mill, or a formed mill, or a similar cutter attached to an arbor, the cut is then taken on *top* of the work.

In the third place, the attachment may be set with its spindle vertical, that is, in a plane perpendicular to the line of motion. It is then used with an end mill, which is applied on *top* of the work for grooving, and on the *side* of the work for plain milling.

As a general rule, the first and the third methods given will allow a greater range of work to be done and allow longer helixes to be cut without interference by the frame of the attachment than is possible with the second method. Since neither the first nor the third method involves a setting over of the milling-machine table, they allow a plain milling machine to be converted into one adapted for spiral work.

9. Cam Classification.—The cams in most general use may be classified as *face cams*, *side cams*, and *grooved cams*. A **face cam** may be defined as a cam that will cause motion in a direction at right angles to its axis of rotation, as, for instance, the cam shown in Fig. 4 (*a*). A **side cam** may be defined as a cam that will cause motion in the direction of its axis, as the cam shown in Fig. 4 (*b*). A **grooved cam** may have the groove cut into its face, as the one shown in Fig. 4 (*c*); in this case, it will cause motion

in the direction of its axis, and may be called a **grooved side cam,** since it causes a motion similar to that of a side cam. The groove may be cut in the side of the cam, however, as shown in Fig. 4 (*d*); in that case, the motion will be similar to that caused by a face cam and, hence, it may be called a **grooved face cam.** The term "cylindrical

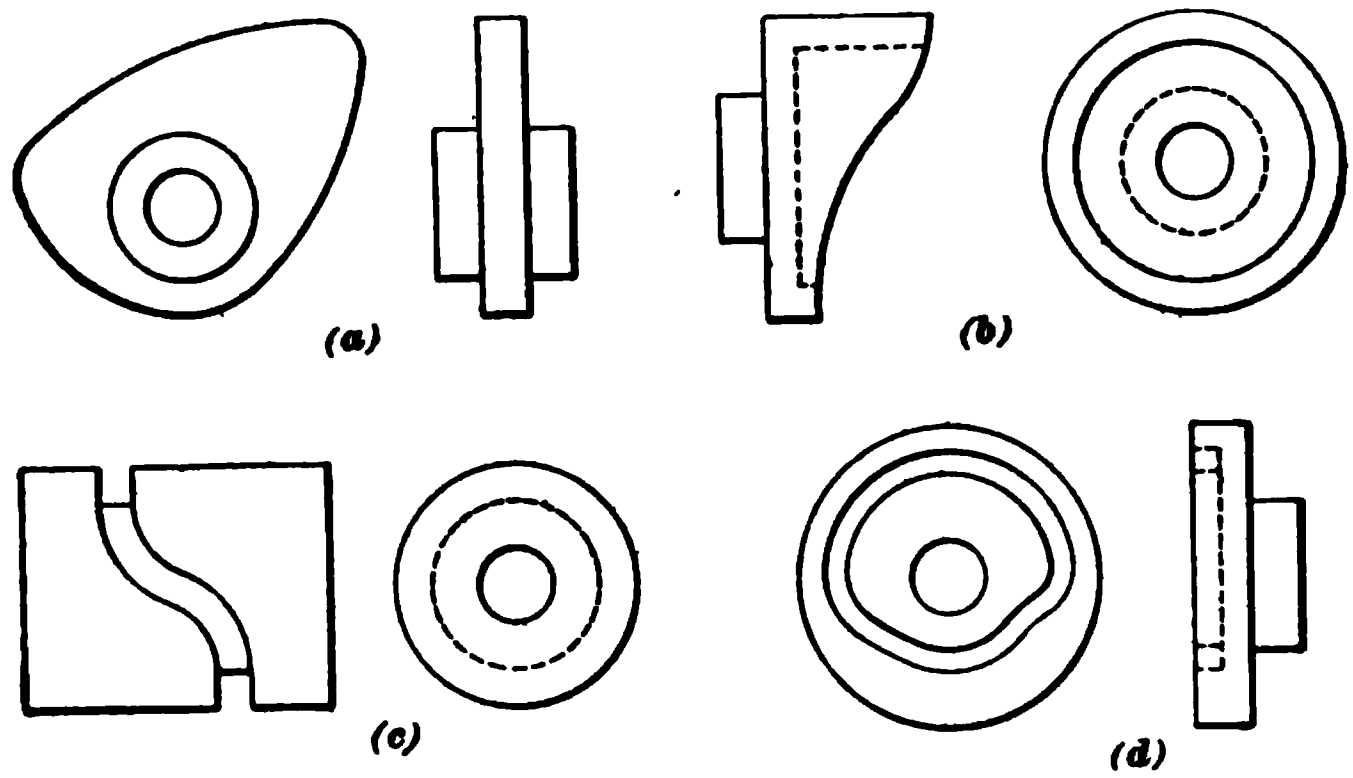

FIG. 4.

cam" is often applied to cams of the kind shown in Fig. 4 (*c*). Cams of the form shown in Fig. 4 (*a*) and (*d*) are often called *radial* cams, and cams that cause motion in the direction of their axes, as those shown in Fig. 4 (*b*) and (*c*), are sometimes called *axial* cams.

10. Cam-Cutting Attachment. — Nearly all the cam cutting that is done in the milling machine may be classified under the heading of duplicate work; in making a cam, the shape of the working surface is, as a general rule, determined by a master cam, which serves as a guide, or templet, for guiding the work in relation to the cutter.

Fig. 5 shows one form of a cam-cutting attachment in place on a milling machine, and will serve to show the principle involved in the construction of nearly all, if not all, such attachments.

A false table *a* is bolted to the regular milling-machine

table; a slide *b* is gibbed to the false table, and is free to slide along it. The slide *b* carries a shaft *c* in a bearing formed in it; this shaft is at right angles to the line of motion of the slide and carries a worm-wheel *d* with which a worm *e* meshes. The shaft *c* can be rotated by hand or automatically; in the latter case, the pulley *f* is belted to some suitable feed-pulley of the machine. In order that the shaft *c* may be driven automatically in any position of the slide, the worm-shaft is splined and is driven by a feather

FIG. 5.

attached to a sleeve that carries the pulley *f*. The shaft *c* is so arranged that it can either be left free to slide in the direction of its axis or can be confined longitudinally; in the latter case, it can only rotate about its axis. The master cam *g* and the work *h* are both fastened to the shaft *c*; a roller carried by the stationary bracket *i* engages with the master cam, which is held against the roller by a heavy weight *k* attached to the slide *b*. It is easily seen that by

turning the master cam the slide is set in motion, and that a milling cutter will cut the work to an outline depending on the shape of the master cam. With the attachment in the position shown in the illustration, face cams having their working surface either on the inside or on the outside, and, also, grooved face cams can be cut.

11. For milling plain or grooved side cams, a properly made master cam is fastened to the shaft *c*, which is then unlocked in order to allow it to slide. The whole attachment is now turned around until it is at right angles to the position shown in the illustration. The weight *k* is then attached to the shaft *c*, and the roller in the stationary bracket *i* engaging with the side of the master cam, the shaft and the attached work will slide in and out, as induced by the master cam. The automatic feed may be driven, in this case, from the pulley *l*. It will be understood that when cutting side cams in this manner, the slide *b* must be locked to the false table *a*.

12. While this device will *cut* cams from a master cam, it will not *produce* a master cam. This must be produced in some other manner first; in many cases the curves of the master cam are such that it can advantageously be finished to the correct shape by milling, or, perhaps, the greater part can be finished by milling and the rest by filing.

13. Planer Milling Attachment.—Fig. 6 shows a milling attachment used for converting a planer into a milling machine. It consists of a head *a* and an outboard bearing *b*, both of which are attached to the regular planer cross-rail. The head *a* carries the spindle *c*, which is bored out to take an arbor or the shank of a cutter. The spindle is driven from the pulley *d* by the intervention of suitable gearing. Since the regular speed of the planer platen is entirely too high to be suitable for the feed, a countershaft will usually have to be introduced in order to lower the speed of the platen, or some other equivalent device must

be used. The cutter is adjusted for depth of cut by moving the cross-rail up or down the housings; the sidewise position

FIG. 6.

of the cutter is adjusted by moving the regular planer head *e*, to which the head *a* and outboard bearing *b* are tied by the rod *f*.

In the particular design of attachment shown, the head *a* is arranged so that it can be swiveled. This allows angular cuts to be made with a plain mill or a side mill, and greatly extends the range of work that may be done.

14. The attachment illustrated will quite satisfactorily convert a planer into a milling machine; it is rather doubtful, however, whether such a makeshift will do as much and as good work as a regular machine designed especially to withstand the strains to which it is subjected by the milling operation. On the other hand, it allows work to be done in one setting that cannot be done otherwise without two separate machines, since it allows some parts of the work to be finished by milling, as, for instance, straight grooves having an irregular profile, and allows the rest of the work, as undercuts, etc., to be finished by planing.

TAKING THE CUT.

DIRECTION OF FEED.

15. Methods of Feeding.—There is a great diversity of opinion among the builders of milling machines as to the direction the feed should have with respect to the direction of rotation of the cutter. Perhaps the majority of builders of milling machines is in favor of feeding the work **against** the cutter; that is, with the cutter rotating in the direction of the arrow *x*, Fig. 7, they hold that the work *a* should be fed in the direction of the arrow *y*. In this case, the tendency of the cutter is to push the work *away* from the cut. On the other hand, there are other builders, among whom may be mentioned the Pratt & Whitney Company, who are in favor of feeding the work **with** the cutter, or if the cutter revolves in the direction of the arrow *x*, they feed the work *b* in the direction of the arrow *z*. In this case, there will exist a tendency to draw the work toward the cutter.

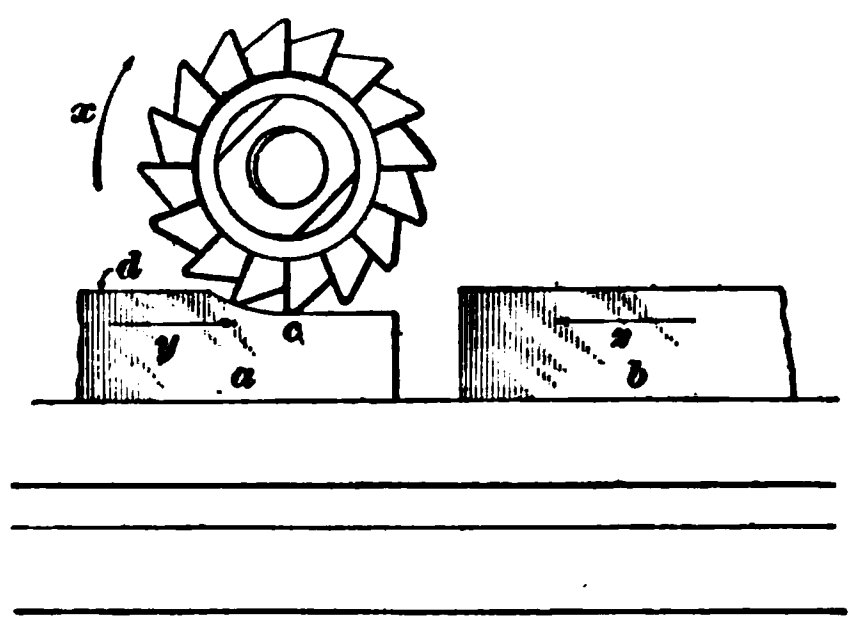

FIG. 7.

16. Choice of Method.—It is by no means settled as to which method of feeding will produce the best results; it is probable that under proper conditions just as good results can be secured with one method as with the other. From this it must not be inferred, however, that a machine built and intended for feeding against the cutter is, without further preparation, adapted for the other way of feeding; an attempt to do so with such a machine is not likely to be repeated by the experimenter on account of the destructive results of the experiment.

As previously stated, by feeding the work in the direction of the arrow *z*, Fig. 7, while the cutter is revolving in the

direction of the arrow *x*, that is, feeding *with* the cutter, there will be a tendency to draw the work toward the cutter. Taking a machine arranged for feeding against the cutter and attempting to feed with the cutter, the latter will suddenly draw the work toward it at the beginning of the cut to an extent depending on the amount of backlash between the feed-screw of the milling-machine table and the nut in which it works. In consequence of this, the cutter will climb up on the work; either the cutter will break, or the arbor will be bent, or the work will be broken. In any case, the result is exactly what might have been anticipated.

17. The whole trouble is due to the backlash always existing between the feed-screw and its nut; by taking up the backlash in the proper manner, or, more correctly speaking, by transferring it to a place where it can do no harm, a machine built to feed *against* the cutter can be made to feed *with* the cutter. The usual and most obvious way to prevent the table from jumping forwards, is to hold it back by a heavy weight attached to a cord or chain fastened to the table; the cord or chain then passes over a pulley placed in line with the table.

18. Considering the case of a milling machine arranged to feed *with* the cutter, it can be used with impunity for feeding *against* the cutter, on account of the fact that there is no tendency for the work to jump toward the cutter.

19. Milling Work With a Hard Surface.—When the work to be milled has a hard surface, as iron castings, steel castings, and some forgings, or has a surface in which sand is embedded, as is the case with brass and similar castings that have not been pickled, the consensus of opinion seems to be that it is better to feed the work against the cutter, since then the cutting teeth will get in below the hard surface, and, working in the soft metal, will keep sharp much longer. Assume the tooth *c*, Fig. 7, to be cutting and the surface *d* of the work to be covered with a hard scale. Then, it can be seen that the tooth *c* comes up from below

the scale and instead of cutting through it, will pry the scale off and crumble it. In this connection, it may be well to mention that a prominent firm states as the result of experiments, in feeding *with* the cutter and *against* it when milling iron castings having a hard scale, that by feeding against the cutter, the latter lasted, without sharpening, eight times as long on an average as when feeding with the cutter.

When the work to be milled is of uniform hardness throughout, the objection of dulling the cutter rapidly by feeding with it disappears, and just as good work can be done by feeding *with* the cutter when everything is properly arranged for that system of feeding.

APPLICATION OF THE CUTTER.

20. General Rule. — There is one general rule in regard to taking the cut that applies to either system of feeding. This may be stated as follows: *Always take the cut in such a manner that the cutter cannot draw the work toward itself.*

In other words, whenever circumstances permit, so arrange the feed and machine that neither the cutter, work, nor machine will be damaged by any slipping of the work.

21. Influence of Spring.—Fig. 8 is an example that brings out some of the points to be taken into consideration in determining the proper direction of the feed. In this case, a cylindrical piece of work is held in the chuck; it is required to cut a rectangular groove, the bottom of which is shown by the dotted line *a* across the end of the work. With the cutter rotating in the direction of the arrow *x*, and feeding in the direction of the arrow *y*, i. e., feeding *with* the cutter, there will, obviously, be a tendency to draw the work toward the cutter. Now, while it is possible to transfer the backlash that allows the work to jump toward the cutter to a place where it will do no harm by weighting

the table back, it is not possible to get rid of the spring of the work itself, and of any spring that may exist in the index head carrying the chuck.

With the cutter rotating as shown by the arrow *x*, it should, in this case, be to the left of the work, or in the position shown in dotted lines, and the work should be fed *against* the cutter, as shown by the arrow *z*. The work will then spring *away* from the cutter, and there will be no danger of its catching and breaking the latter.

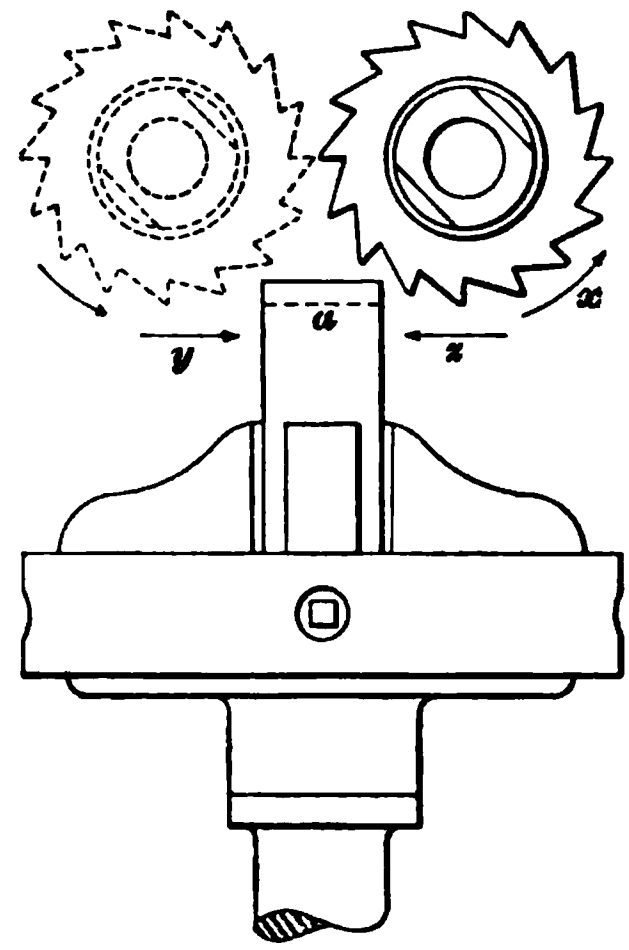

FIG. 8.

From this example, it is learned that the spring of the work and of the attachment in which it is held must be taken into consideration, and that allowance must be made for it in determining the proper direction of feed.

22. Example of Feeding With the Cutter.—Occasionally it is a decided advantage to feed *with* the cutter when the machine can be arranged to allow this to be done. Thus, for instance, consider the piece *a* shown in Fig. 9 to be held in the vise and resting on the packing-block *b*. It is required to rough the upper surface down to the dotted line shown.

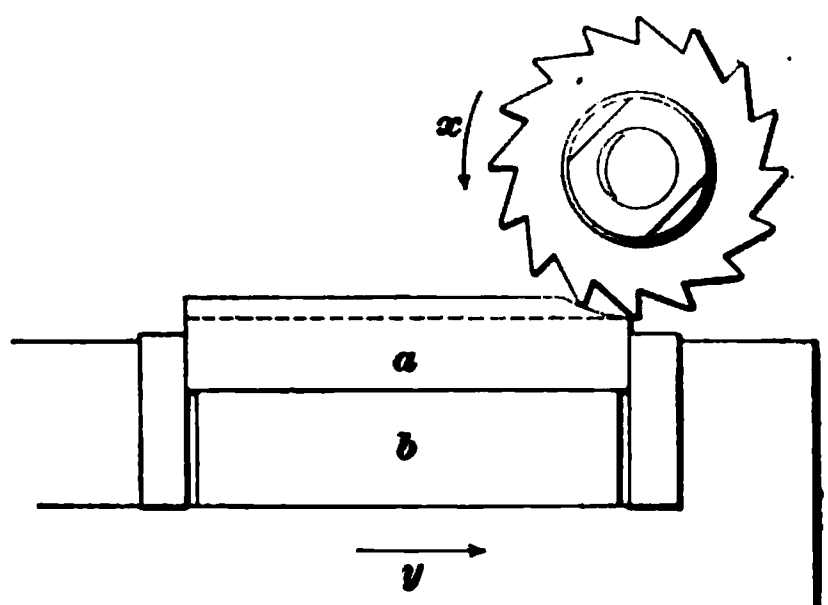

FIG. 9.

Then, with the cutter revolving in the direction of the arrow *x* and feeding in the direction of the arrow *y*, the pressure of the cut is mainly downwards, there being no

tendency at all to lift the work. In consequence, the work will be pressed firmly against the packing-block.

As previously stated, no attempt should be made to take a cut in this manner unless the machine is arranged to suit this method of feeding, and the work is of uniform hardness.

23. Slipping of Work.—Fig. 10 is an example showing that there is occasionally a right and a wrong way of applying the cutter to the work, even after the direction of feed that is considered proper has been adopted. In this case, it has been determined to feed against the cutter; the work *a* is held between the vise jaws, as shown, and a cut is to be taken at an angle other than 90° with the top surface of the work. This particular job occurs in making forming tools for fly cutters and formed milling cutters. The depth and direction of the cut are given by the dotted line *b*. Now, with the cutter above the work and rotating in the direction of the arrow *x*, to feed against the cutter the feed must be as shown by the arrow *y*. While feeding in this manner, assume that the work slips, as is very liable to happen. Then, the work will rotate about a point somewhere near *c*, and the end operated on will move in an arc about as *de*, or toward the cutter. The natural result of this will be that something must give way, and either the cutter or the work, or both, will be ruined.

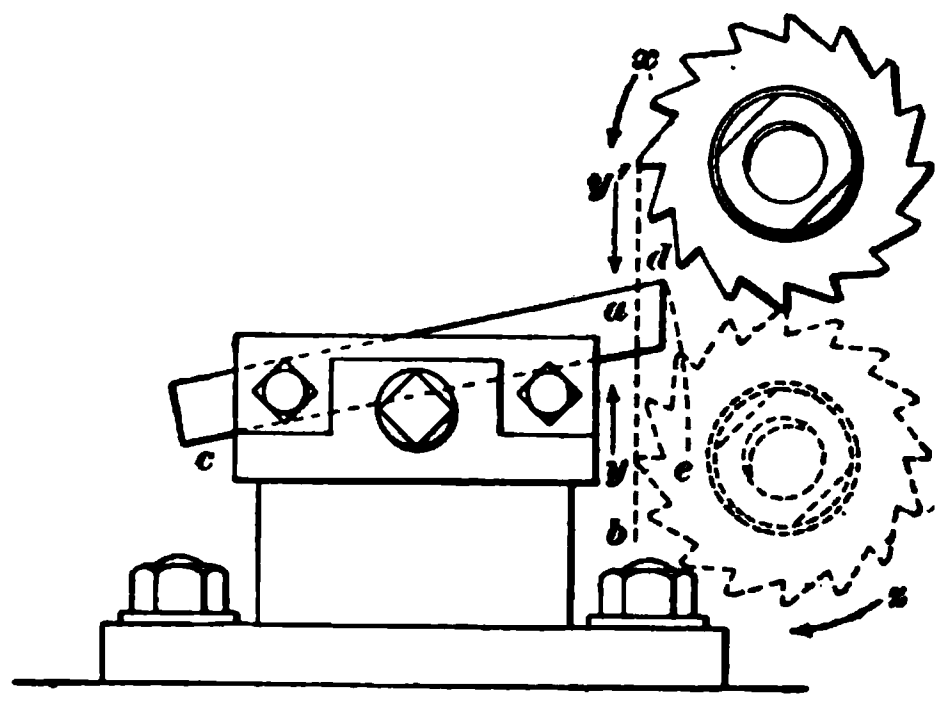

FIG. 10.

In order to overcome the evil effect of slipping, the cutter should, in this case, commence to cut at the bottom; it should revolve in the direction of the arrow *z* and the feeding should occur in the direction given by the arrow *y'*. In

case of slipping, the work will then move *away* from the cutter, and there is little likelihood of its being spoiled by it.

24. The rectangular work *a* shown in Fig. 11 requires a slot to be cut in its end; the depth of the slot is indicated

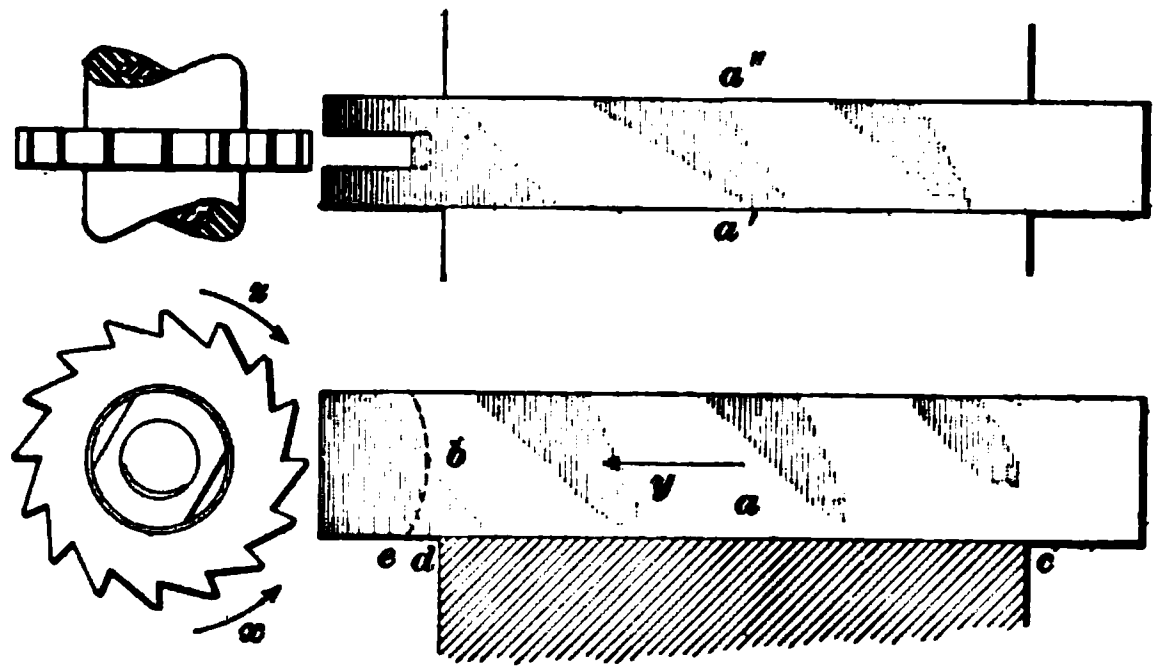

FIG. 11.

by the curved dotted line *b*. If the work is at all long, and a horizontal machine is used, it will have to be held in the vise so that its surfaces *a'* and *a''* are in contact with the vise jaws. So far as the direction of the feed is concerned, no choice is possible in this case; it must be in the direction indicated by the arrow *y*. Now, considering the direction of rotation of the cutter, it may either be as shown by the arrow *x* or the arrow *z* (in the latter case the cutter would naturally be reversed).

This is a case of milling where it is not possible to overcome the evil effect of slipping of the work, for, no matter which way the cutter rotates, the catching of the cutter due to excessive feeding will not push the work out of the way, but will either lift up or depress the end operated on. If slipping occurs, it is preferable to have it take place in an upward direction; the work will then rotate about the corner *c* of the vise, and the corner *e* of the slot will rapidly come clear of the cutter. In order that slipping will take place in this manner, the cutter must revolve in the direction of the arrow *x*. Now, assume that the cutter revolves in the direction indicated by the arrow *z*. Then, should the

work slip, its end will rotate downwards about the corner *d* of the vise; that is, it will be drawn in between the vise and cutter with results that are likely to be disastrous to the vise, cutter, and work.

From the foregoing explanations, the conclusion may be drawn that when it is not possible to make the work slip *away* from the cutter, it should be the aim to so arrange everything that slipping will do the least possible amount of damage.

SLOTTING WITH END MILLS.

25. Cases Arising in Practice.—In cutting slots or grooves with end mills, three cases arise in practice, as follows: Cutting from the solid metal; finishing in one operation two sides of a slot that has previously been roughed out; and finishing each side of a slot separately.

26. Slotting From Solid Metal.—When cutting a slot or a groove out of the solid metal, as is shown in Fig. 12, either a right-handed or a left-handed cutter may be used,

(a) (b)

FIG. 12.

depending on which is available. The direction of the feed in respect to the rotation of the cutter is only influenced by the manner in which the cutter must turn in order to cut.

Considering a left-handed cutter, as shown in Fig. 12 (*a*), which is a view looking *toward* the spindle, it can be seen

that the cutter, which naturally has a tendency to spring away from the cut when cutting on the side *a*, will crowd upwards, as there is always some spring to an end mill. In consequence of this, the slot or groove will be slightly above the position for which the cutter is set. When the cutter approaches the work so that its side *b* is cutting, the cutter will crowd downwards; the slot or groove will then be cut slightly below the position of the cutter.

When a right-handed cutter is used, as shown in Fig. 12 (*b*), and when feeding so that the side *a* does the cutting, the cutter will crowd downwards. Should the cutter be applied, however, in such a manner that the side *b* will do the cutting, it will crowd upwards.

27. A slot or groove cut from the solid metal and not finished any further must not be expected to be very true throughout its length. The reason for the deviations from truth that will be found lies in the fact that the metal operated on, no matter how good it may be, is neither perfectly homogeneous nor of uniform hardness. In consequence of this, the cutter will crowd over to a varying extent with the result that the sides will not be true. On account of this fact, a slot or a groove cut with an end mill should always be finished by milling either both sides simultaneously after roughing out or each side separately, when a good job is desired.

28. Finishing Slots in One Operation.—When both sides of a slot or groove are to be finished simultaneously, the cutter must obviously have a diameter equal to the finished width. In setting the cutter, the mistake of setting it in such a manner that it will take cuts of equal depths must not be made, if good work is desired. This mistake is so common that it has led many persons to seriously doubt the possibility of milling true and nicely finished slots and grooves with an end mill.

29. Fig. 13 (*a*) shows a groove that is being finished with a left-handed end mill set central in respect to the roughed-

out groove. In this case, the feeding takes place in the direction of the arrow *x*. Considering the teeth of the upper half of the cutter, it is seen that the feeding is done *against* the cutter; considering the lower half of the cutter, the feeding is seen to be *with* the cutter. Now, during feeding, there will be, at the bottom, a greater tendency for the cutter to draw the work toward itself than there will be

(a) (b)

FIG. 13.

at the top to push the work away; if the work cannot move, the cutter will spring forwards and the consequence will be either broken teeth or a rather ragged groove, in case the teeth are strong enough to stand the strain. When the amount of metal removed is very small, the evil effects of this manner of setting are naturally not so pronounced as in cases where a fairly heavy cut is taken.

30. The proper way of setting the cutter is shown in Fig. 13 (*b*). Here the cutter is set so that the depth of cut on the side where the feeding is done against the cutter is about twice as great as on the other side; in consequence of this, the tendency of the cutter to jump forwards is overbalanced by the resistance due to the greater depth of cut, and the result will be a fairly smooth and true groove.

From the foregoing statements, the conclusions are to be drawn that when a smooth and true groove or slot is to be finished on both sides with an end mill, the center of the roughed groove or slot should lie on that side of the center

of the finished groove or slot where the feeding, while finishing it, will be *with* the cutter.

31. Finishing Slots in Two Operations.—It is the opinion of many milling-machine operators that the best results in cutting slots and grooves with end mills can be obtained by finishing each side separately; this involves using a milling cutter a little smaller than the finished size.

Whenever circumstances permit it, the roughing out should be done with a face cutter, which can be crowded harder and will cut faster than an end mill, chiefly by reason of its being more rigid.

FEEDING INTO CORNERS.

32. Undercutting of Face Cutter.—When taking a shallow cut against a high shoulder, or **feeding into a corner,** as it is called, it will be found, as is shown in Fig. 14, that the curved shoulder cut by the cutter, instead of being tangent to the bottom *a* of the cut, or as shown by the dotted curve, falls below the bottom, being about as is shown by the full curved line. The reason for this phenomenon lies in the fact that no matter how stiff an end cutter or a cutter arbor may be, it will still deflect to a certain extent under the action of a relatively small force. Now, in the case of feeding into a corner, the pressure on the arbor due to the cutting operation is about in the direction of the arrow *x*; that is, there exists a tendency to draw the cutter to the work, and since the arbor can yield, the cutter will be drawn in enough to show distinctly the undercutting illustrated in the figure.

FIG. 14.

This undercutting is least marked with a low shoulder, but rapidly increases as the height of the shoulder becomes

greater. It can be overcome to some extent by using a stiffer arbor, or, if possible, by supporting the arbor by an outboard bearing; the only way in which it can be entirely overcome, however, is by taking the cutter slightly away from the work, or vice versa, when the shoulder is almost reached. This naturally calls for some skill and judgment on the part of the operator; the exact amount that the cutter and work must be separated can be determined only by experiment in each particular case.

33. Undercutting of End Mill.—The phenomenon of undercutting manifests itself to a more marked degree at the termination of slots cut with an end mill, as shown in Fig. 15. As previously stated, the cutter shown will crowd upwards, and, hence, its actual path will be given by a line, as *a*, Fig. 15, while *b* represents the path of the cutter for which the machine is set. When the cutter is at the termination of the slot, that is, when the feed has been stopped, it will tend to spring back to its normal position, and, in consequence, it will cut under until all spring is gone.

FIG. 15.

The undercutting can be minimized, as in the previous case, and can be largely prevented by a slight movement of the cutter or work in the proper direction at the moment the feed is stopped. For instance, if the tendency of the cutter is to go down, the work should be lowered slightly or the cutter raised; if the tendency of the cutter is to go up, the work should be raised or the cutter lowered. The exact amount of movement is a matter of experiment and judgment in any case.

34. Referring again to Fig. 15, let the feed be reversed when the cutter has reached the termination of the groove, or slot. Then, since in this operation the cutter is slightly below the lower surface, it will cut it away to some extent

when fed over it again, thus widening the groove. From this we learn that a milling cutter used for cutting two sides of a groove, or slot, simultaneously, will, if fed over the work in opposite directions, cut a path wider than its own diameter.

STARTING THE CUT.

35. After the machine has been adjusted so that the cutter will take the desired depth of cut, the machine is started and the cutter is brought almost in contact with the edge of the work. The cut is then started either by throwing in the automatic feed or by careful feeding by hand. On the whole, the method of starting the cut by means of the automatic feed is considered preferable, as there are less chances for an accident to occur. When a cut is started by hand, any carelessness may result in pushing the work in deeply between two teeth of the revolving cutter, as is

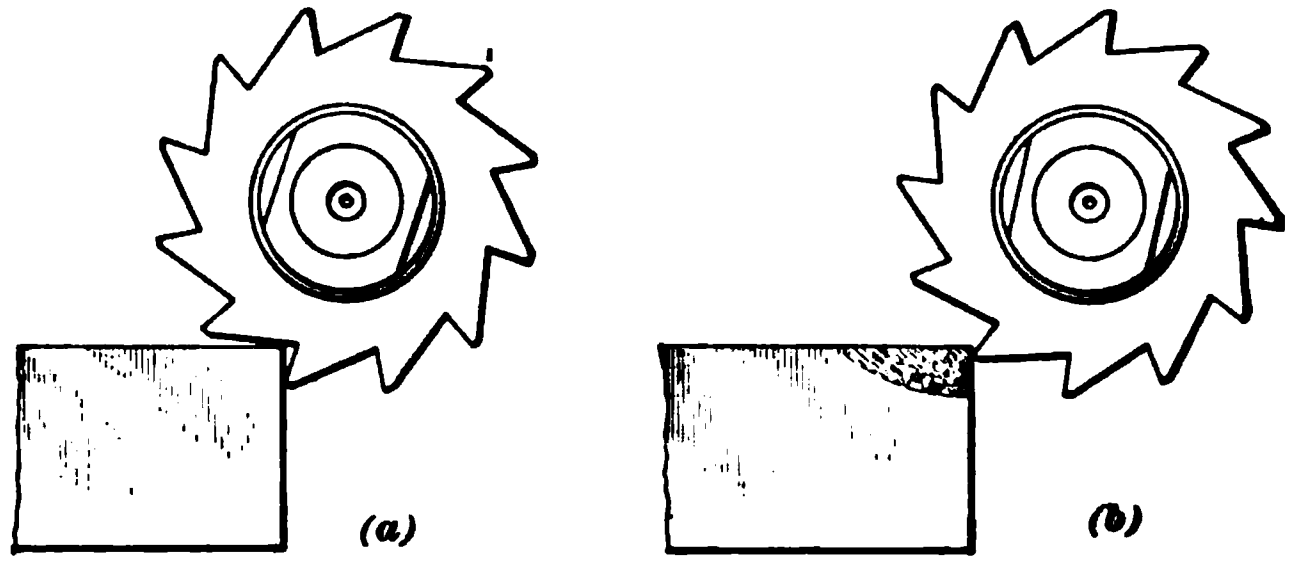

FIG. 16.

shown in Fig. 16 (*a*), with the result that the cutter will be broken, or the work spoiled, or both. But, if the automatic feed is used, or very careful hand feeding equivalent to automatic feeding is done, the teeth of the cutter will approach the work gradually and take successive, easy cuts, as shown in Fig. 16 (*b*), without undue straining of the cutter and the work. Since even very careful hand feeding will never be as uniform as automatic feeding, the latter is preferable whenever circumstances permit it to be used.

RUNNING OUT THE CUT.

36. When a heavy cut is run over a piece of relatively brittle metal, as cast iron, it will be noticed that where the cut runs out, the edge will be broken to a considerable extent, especially when a rather wide straight-tooth cutter is used. This chipping can be reduced to a minimum by beveling the edge where the cut runs out to an angle of about 45°, just as is done in planer and shaper work.

REVOLUTION MARK AND BRACING.

37. Cause of Revolution Marks.—When a milled surface is carefully examined, it will be found to have a wavy appearance, with what might be called the "crest" of the waves recurring at regular intervals. It has been noticed that the distance between the crests is generally equal to the traverse of the work for one revolution of the cutter; on account of this fact, the general name of **revolution marks** is applied to the collection of marks distinctly due to the milling operation.

Revolution marks are due to one or more, or, perhaps, all of several causes, as follows: a cutter that does not run absolutely true, a yielding machine, springy work, and the use of too light an arbor.

38. The width of each revolution mark seems to depend entirely on the amount of feed per revolution; from this it follows that cutting down the feed will cause smoother milling. In case the feed is cut down, the speed of the cutter may be increased. The depth of the revolution marks depends on the amount of vibration existing, and as the vibration is chiefly due to the fact that the cutter does not run absolutely true, an attempt to reduce the depth should commence with truing the cutter. This should be followed by supporting the cutter, whenever circumstances permit, by means of an outboard bearing, which in turn

should be rigidly braced after the machine has been set for the correct depth of cut.

39. Bracing.—Most modern machines are supplied with braces that will tie the outboard bearing either directly to the frame or to some machine part that in turn can be clamped to the frame. Most commonly, two slotted braces are pivoted to the knee; a clamping bolt then passes through the slots of the braces and ties them to the outboard bearing.

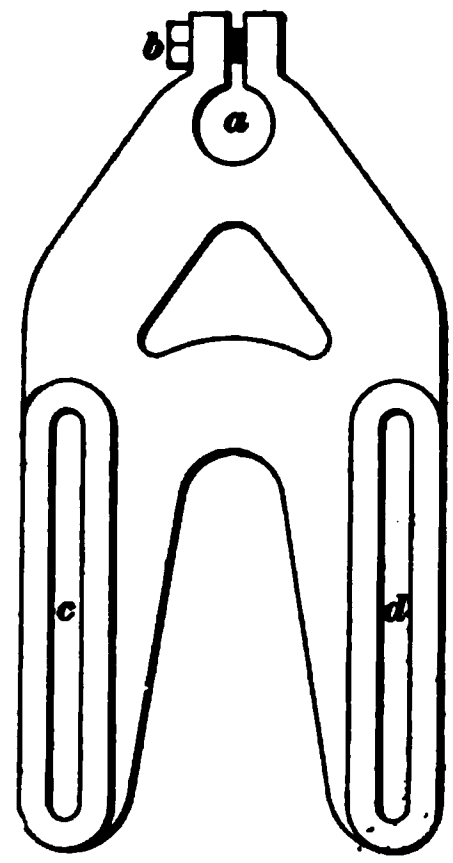

FIG. 17.

Fig. 17 is a less common design intended for a horizontal machine. The brace is an iron casting; a hole *a* is bored at the top to fit a projecting shoulder of the outboard bearing, to which it can be clamped by means of the bolt *b*. Stud bolts are screwed into the face of the knee and pass through the slots *c* and *d*; the studs carry nuts and washers and are used for clamping the brace to the knee. The slots in the brace allow the knee to be adjusted for height.

40. Reduction of Revolution Marks.—While the revolution marks can be cut down to a minimum by a true-running cutter, well-supported work, and a properly braced machine, they will never entirely disappear, for no matter how well the bracing is done and how stiff the machine, there will still be some vibration. Furthermore, no matter how true a cutter is ground, it will not stay true. It is a practical impossibility to harden a cutter so that all of its teeth will be of exactly the same hardness; consequently, the softer teeth will wear down faster than the hard ones and, hence, the cutter will soon run slightly out of true. To sum up: The revolution marks can be decreased by a fine feed, a true-running and well-supported cutter, properly blocked up work, and a rigid, well-braced machine.

SETTING THE MACHINE.

ADJUSTMENT OF SPEED AND FEED.

41. Definition. — Under the general appellation of **setting the machine** is included the selection of a proper cutting speed and feed, and arranging the machine for them; setting the cutter or cutters for depth, sidewise, and for width of cut; and adjusting the automatic feed to trip at the required point.

42. Adjusting the Speed.—After a cutting feed and speed as directed by judgment have been selected, the driving belt and feed-belt are placed on the proper steps of their respective cone pulleys. The determination of the proper step to use is a very simple matter when the number of revolutions that the milling-machine spindle makes with the driving belt on the different steps is known. This is found quickest by actually counting for 1 minute, using a revolution indicator for this purpose. Then, to find what number of revolutions corresponds to a given surface speed of the cutter, either refer to the tables given at the end of *Milling-Machine Work*, Part 1, or use the following rule:

Rule.—*Divide 12 times the cutting speed in feet per minute by the circumference of the cutter in inches.*

The correct number of revolutions having been found, place the belt on the step that will give the nearest number of revolutions.

EXAMPLE.—With the belt on the smallest step of the cone pulley, the spindle makes 305 revolutions; with the belt on the second step, it makes 178 revolutions; with the belt on the third step, 110 revolutions; and with the belt on the largest step, 68 revolutions. What step would be selected to give approximately a cutting speed of 80 feet per minute to a cutter $3\frac{1}{2}$ inches in diameter?

SOLUTION.—The circumference of the cutter is $3\frac{1}{2} \times 3.1416 = 10.9956$, say 11 inches. Applying the rule, we get

$$\frac{12 \times 80}{11} = 87 \text{ revolutions, nearly.}$$

Using the largest step, the cutting speed will be lower than desired; using the third step it will be higher. Generally, it is desirable to start in with the lower speed and watch results; hence, most operators would place the belt on the largest step. Ans.

In actual practice, an experienced operator will rarely stop to calculate the proper number of revolutions; his past experience will tell him, as soon as he sees the material and the depth of cut to be taken, on what steps to place the driving belt and feed-belt. A careful operator, no matter how extensive his experience has been, should make it a rule to verify the accuracy of his judgment occasionally by calculation.

43. Adjusting the Feed. — The arrangement of the feed mechanism differs so much in the various makes of milling machines that no specific rules for calculating the feed of the table per minute can be given. Nearly all modern milling machines use a screw for feeding the table; with all such machines, the feed per minute may be readily calculated by the following general rule:

Rule.—*Observe the number of revolutions that the spindle must make to produce one revolution of the feed-screw, and divide by it the product of the lead of the feed-screw and the revolutions of the spindle per minute.*

EXAMPLE.—In a certain make of machine, the spindle must make 2 revolutions to produce 1 revolution of the feed-screw. The lead of the feed-screw being $\frac{1}{4}$ inch, what is the feed per minute at 32 revolutions of the spindle?

SOLUTION.—Applying the rule just given, we get

$$\frac{\frac{1}{4} \times 32}{2} = 4 \text{ inches. Ans.}$$

44. Construction of Feed Tables. — In practice it will, as a general rule, be found that the countershaft to which the machine is belted runs practically at a constant speed, so that the number of revolutions per minute of the spindle will remain constant for each speed; that is, if the spindle makes, say, 32 revolutions with the belt on the largest step, it can safely be assumed that it will make very

nearly that number of revolutions whenever the belt is placed on the largest step. This fact makes it possible to construct an exceedingly convenient table of feeds per minute at the different speeds with all the different changes of feed that are possible.

In the first place, observe how many revolutions of the spindle will be required for 1 revolution of the feed-screw with each change of feed; then apply the rule given in Art. **43** to each speed of spindle and feed-change combination that is possible, and tabulate the result for future reference.

45. Signs of Excessive Speed and Feed. — After the machine is started, watch the cutter to see that the speed is suitable, and watch the driving belt and feed belt to determine an excessive feed. Too high a cutting speed will manifest itself by a rapid dulling of the cutting edges and, subsequently, a peculiar squeaking sound; an excessive feed results in a slipping of the driving belt or the feed belt, or both, and causes a shrill squeak to emanate from the belt. In extreme cases, one or both of the belts may run off the pulley.

SETTING THE CUTTER.

46. Setting for Depth. — The machine can be adjusted to the correct depth of cut in two ways, which are by *trial* and by *measurement*. In an adjustment by trial, the cutter is set to about the correct depth and a cut is taken. According to circumstances, either the depth of the cut or the machined work is then gauged by gauges of suitable form, and the setting and taking of a cut is repeated until the work fits the gauge. The gauging device may be any suitable measuring instrument or a special gauge made for the purpose; duplicate work is milled almost entirely to limit gauges. When the work has rather an intricate form, setting the machine by trial is, as a general rule, the only method that can be employed, although in isolated cases it may be possible to use the direct-measurement method.

47. When about to set a cutter for depth by measurement, the machine may be started and the work and cutter carefully brought together until the cutter very lightly touches the work. Then, by observing the indication of the graduated dials reading to $\frac{1}{1000}$ inch, with which the feed-screws of the better kind of milling machines are supplied, and which transform these screws into micrometer screws, the work and cutter are brought together an amount equal to the depth of cut required.

The reading of the dial is taken when the cutter is just touching the surface of the work; the required depth of cut is then added to, or subtracted from, this reading and the machine is set to the calculated new reading. It will be understood that before the depth of cut is adjusted, the work is run clear of the cutter. The micrometer graduations are, also, very useful for adjustment by gauging, since they allow the depth of cut to be increased by a definite amount. For instance, if the measurement of a piece of work shows it to be $\frac{7}{1000}$ inch too thick, the graduations allow the work to be raised, or the cutter to be lowered, by just that amount. Care must be taken to see that all the lost motion in the feed mechanism is taken up before bringing the work in contact with the cutter.

48. In many cases, in setting the machine for depth of cut, it is not possible to measure from the surface to be machined, owing to its being rough and uneven. In most cases there is some finished surface parallel to the proposed cut in contact either with the bottom of the vise, or the surface of the milling machine, or of an angle plate, or of some special fixture from which measurements can be taken to the cutter. Then, the cutter may be set for depth by testing with a scale, or with a surface gauge, or a height gauge, or some similar convenient device, measuring from the finished surface.

49. Fig. 18 shows how a surface gauge may be used for testing the setting of the cutter. In this case, a face cutter is employed; the problem is to set it so that the work *a*,

when finished, will be a certain height. The pointer *p* of the surface gauge may be set by the aid of a steel rule to the given height above the surface of the milling-machine table, and then used for testing the height of the cutter. To do this, the cutter should be placed in such a position that a

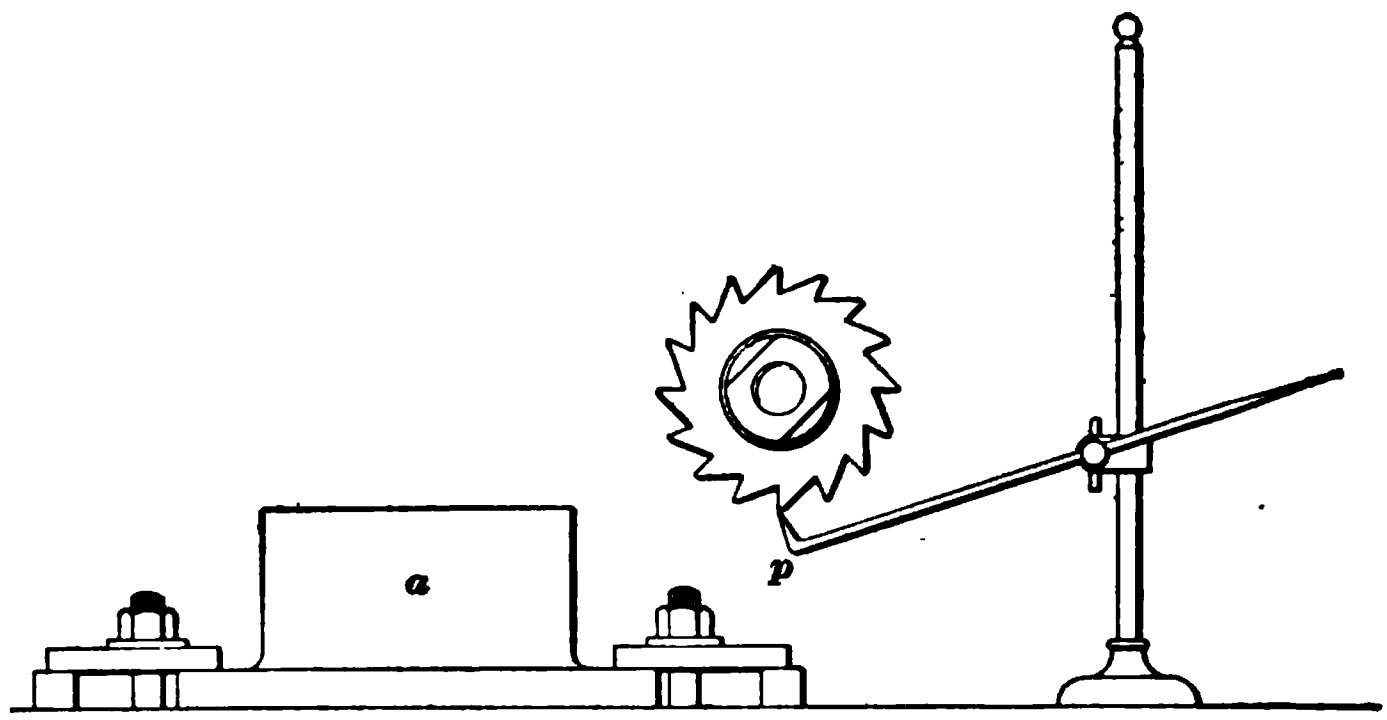

FIG. 18.

line drawn through one of its cutting edges and the center of the cutter is at right angles to the surface of the table. Now place the pointer of the gauge beneath the cutting edge selected, and raise the table, or lower the cutter, until the cutting edge and the pointer touch. The cutter is then set correctly.

50. When a surface gauge is not available, and a steel rule cannot be used by reason of the interference of the arbor, a pair of inside calipers may be set to the given height and used for testing. Owing to the difficulty of holding them exactly at right angles to the surface measured from, calipering cannot be recommended as a particularly accurate method of testing. On the other hand, it is convenient.

51. The special surface gauge shown in Fig. 19 (*a*) will be found of advantage for machines that have no graduated dials, and when a cutter is to be set for a given depth of cut. The surface gauge differs from the ordinary one in that it carries two heads and pointers. In use, the pointer *p* is set to touch the surface of the work; the pointer *q* is now

adjusted until the distance between it and the pointer *p* is equal to the required depth of cut, when *p* is swung up out of the way and *q* is used for testing the setting of the cutter, as shown in Fig. 19 (*b*).

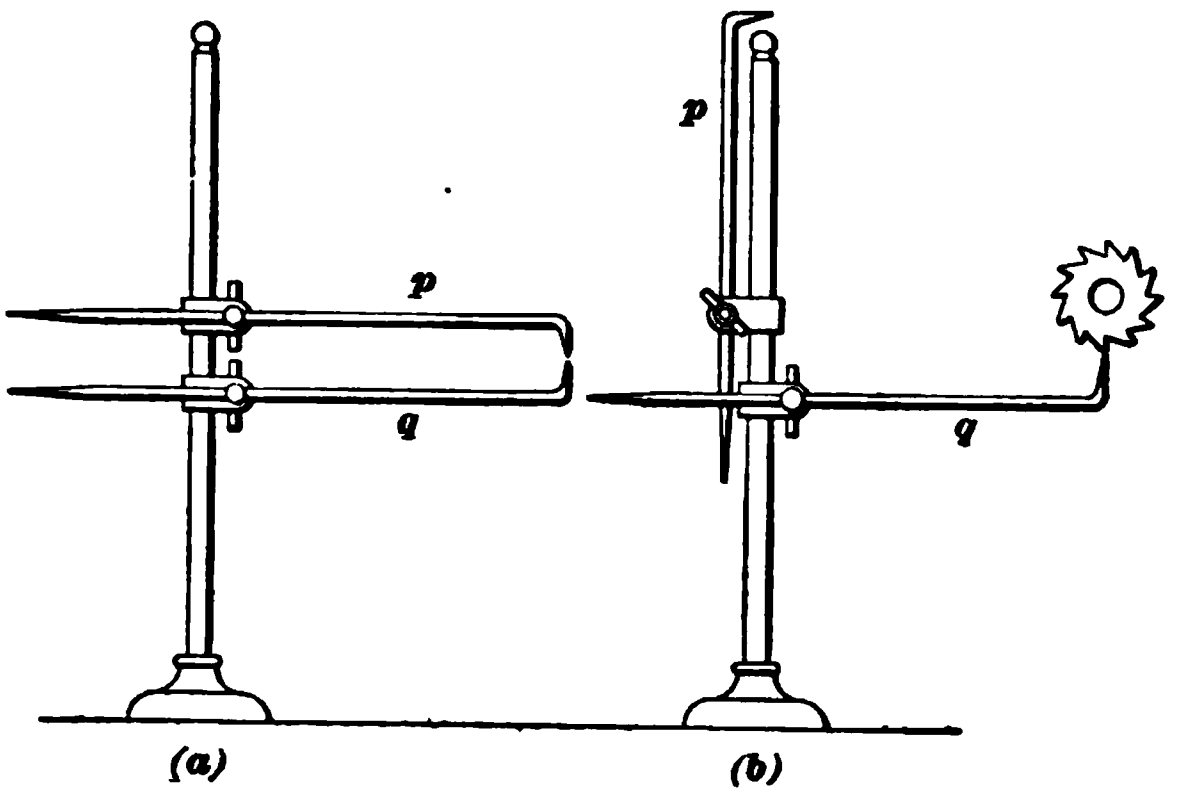

FIG. 19.

52. A careful operator will always gauge the setting of the cutter as soon as it cuts the full depth for which it is set, in order to make sure of the setting. Whenever this is done, it is advisable to stop the machine to prevent any accident during gauging.

53. In work done between index centers, it often occurs that the bottom of the cut must be at an exact distance from the axis of the work. In this case, the cutter may first be set to touch the work, and then set to a depth equal to the difference between the radius of the work and the required distance from the center.

54. In some instances, a little calculation will be required in order to obtain the correct distance from the axis from which to compute the correct depth of cut. For instance, assume that a gear is to be cut with a cutter that requires to be sunk in to a depth of .27 inch when the diameter of the gear blank is exactly 5.25 inches. On measuring the gear blank, it is found to be only 5.23 inches; it is required to find the depth to which the cutter is to be set in order to

preserve the correct distance of the bottom of the cut from the axis. The correct distance, evidently, is $\frac{5.25}{2} - .27 = 2.355$ inches. The radius of the actual gear blank is $\frac{5.23}{2} = 2.615$ inches. Then, the depth of the cut for which the machine is to be set is $2.615 - 2.355 = .26$ inch.

55. Setting the Cutter Sidewise. — In setting a cutter sidewise, several cases occur in practice, the most common of which are: the cutter is wider than the work, and the cut is to be taken over the whole surface; the cutting is to be done to a shoulder in a plane at right angles to the axis of rotation of the cutter; and the cutter is to be set centrally to a vertical or horizontal plane passing through the index centers or index-head spindle.

Considering the first case mentioned, the cutter can in nearly all cases be set sidewise by eye alone, and, hence, no special directions are required. Taking up the second case, the cutter may be set correctly by trial (this chiefly occurs in duplicate work of intricate shape) or by measurement. As a general rule, the distance of the shoulder from some edge of the work is either accurately or approximately known, and the cutter can be quite accurately set by measurement, gauging after the cut has been taken. In setting by measurement, a steel rule may be applied as shown in Fig. 20, where the dotted lines show the depth and location of the cut to be taken over the work *a*.

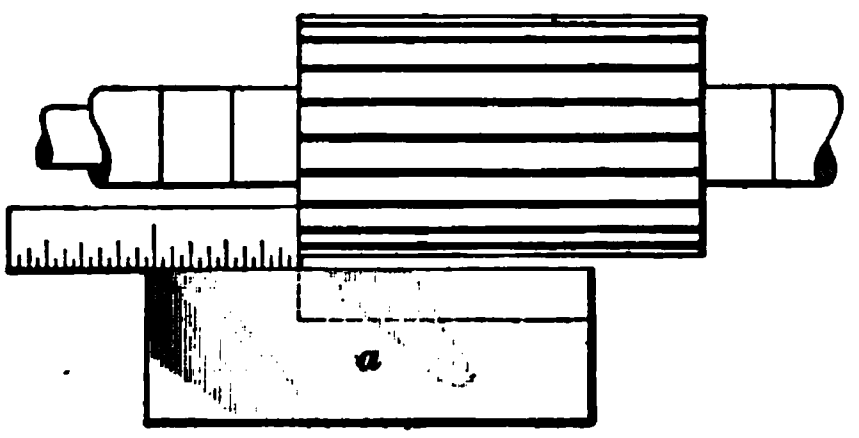

FIG. 20.

56. Setting the Cutter Central and Off Center. A cutter may be set central, in respect to work held between centers, in several ways. A very simple way often used in horizontal machines is shown in Fig. 21; the accuracy of

the setting attainable by this method depends, primarily, on the vertical line of motion of the work or cutter being exactly at right angles to the surface of the milling-machine table.

The work is placed between the centers or in the chuck, and a try square *c* is then set on the table with its blade in contact with the work. In the case of a symmetrical cutter, as a gear cutter or double-angle cutter with equal angles, the distance *a* is then measured. The try square is next placed on the other side of the work, into the position shown in dotted lines, and the distance *a'* is measured. The difference in the measurements *a* and *a'* shows which way the cutter or work is to be moved; the amount that it is to be moved is equal to half the difference. In the case of cutters that are not symmetrical, there is always some well-defined edge that is to be set central; in such a case, the measurement *b* is taken and compared with *b'*. If the table is arranged to swivel, it should be set to zero before setting the cutter.

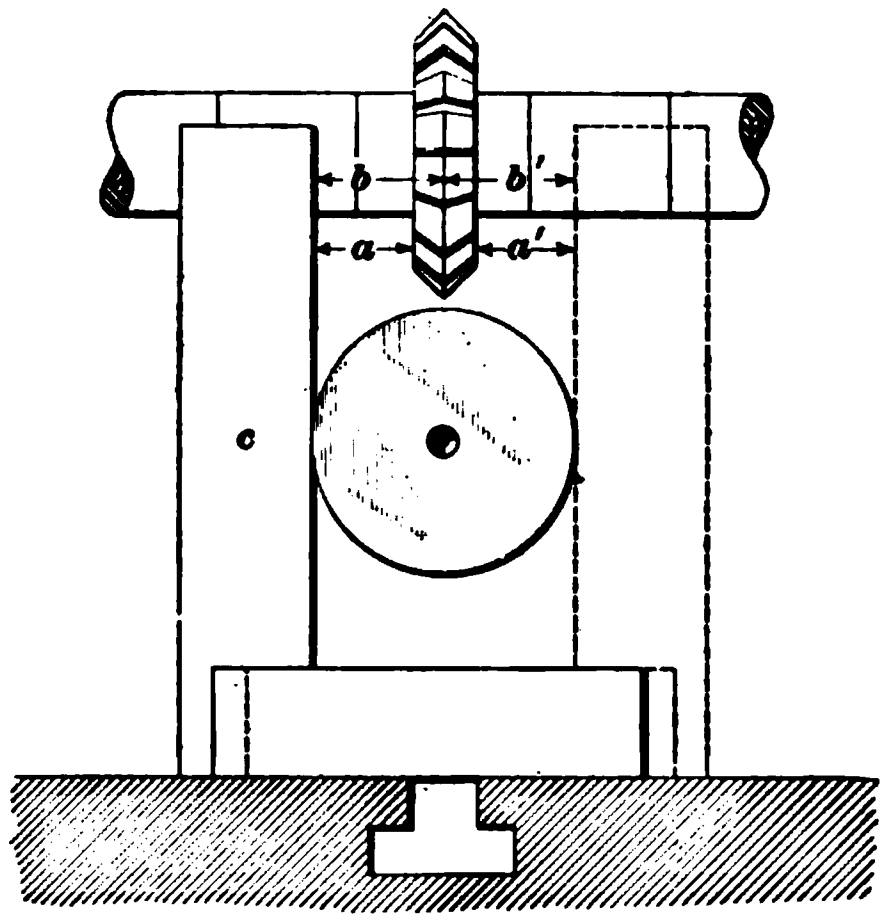

FIG. 21.

57. Double-angle cutters with unequal angles often require to be set a given amount off center. To do this, set the cutter central and then move the work or the cutter sidewise by the amount required, using either a steel rule and measuring from the blade of a try square or the graduated feed-screw dial, if one is available.

58. A rough-and-ready way of testing the central setting of a cutter in a horizontal machine is to test by means

of one of the index centers. The table having been set to zero, i. e., so that the line of motion is at right angles to the axis of rotation of the cutter, the knee is raised until the center used for testing is about on the same level as the cutter. The milling-machine table is now shifted until the part of the cutter that is required to be central is in the vertical plane of the index centers, as near as can be judged by eye. While this method of setting is not the most accurate one that can be devised, it will be sufficiently accurate for the greater part of the work that is to be done.

59. Another fairly accurate way of testing the setting is shown in Fig. 22, which is a top view. The work *a* is placed between the centers and the cutter and work are brought together until they touch slightly. The cutter, while revolving, is then fed across the work, or vice versa, in the direction of the axis of the cutter, thus cutting out a small elliptical spot *b*. The cutter is now set central with this spot by eye. If the work runs very true, this method is as accurate as the one previously described.

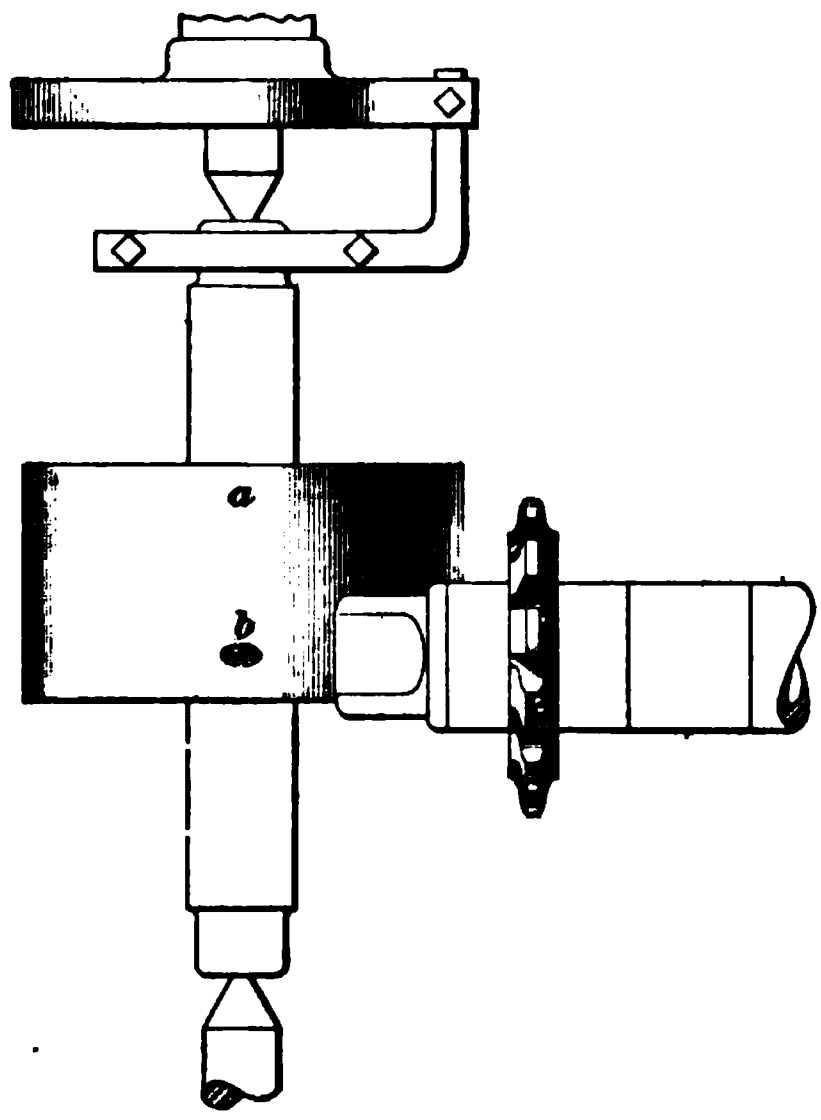

FIG. 22.

60. One of the most accurate methods of testing the central setting of a cutter for work held in the chuck, and, also, for work held between centers that are properly in line, is shown in Fig. 23. Any suitable piece of metal is held in the chuck and a cut taken across the face of it, as the cut *a*, Fig. 23. The testing piece is then revolved exactly one-half a revolution and another cut taken

without having disturbed the setting of the cutter. Then if the last cut does not exactly coincide with the first, it shows the cutter to be off center; in extreme cases, two distinct grooves, as *a* and *a'*, may be cut.

61. When an end mill is to be set central to work held between centers, either in a horizontal or a vertical machine, the problem, in reality, is to make the axes of rotation of the work and cutter intersect. The machine may be set correctly by placing a true-running milling-machine arbor *a*

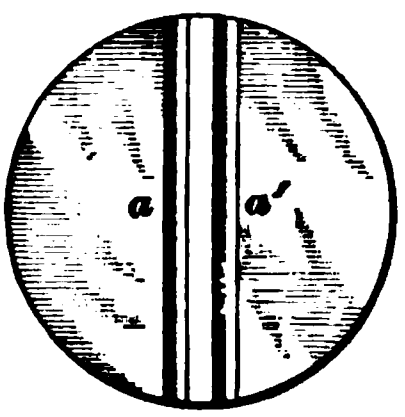

FIG. 23.

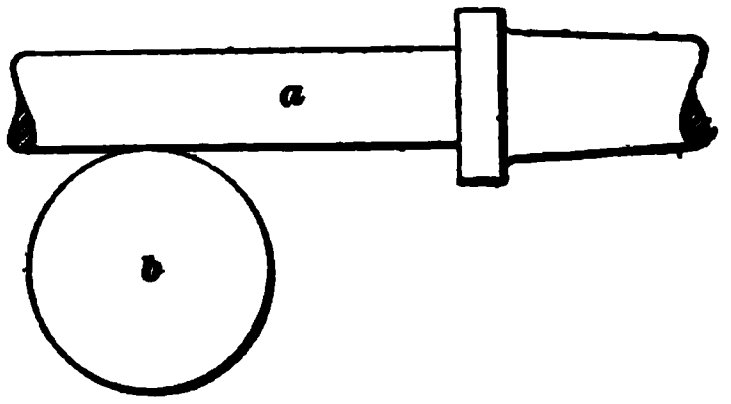

FIG. 24.

in contact either with the work *b* or with a true-running mandrel placed between the centers, as shown in Fig. 24, using a piece of thin tissue paper as a feeling piece. Remove the arbor and then shift the table or the spindle an amount equal to the sum of the radii of the work, or mandrel, and the arbor.

If this method of setting is used in a horizontal machine, the centers must be parallel to the line of motion in a horizontal plane. For a vertical machine, the centers must be in a vertical plane parallel to the line of motion. When the work is conical, it is recommended to substitute a cylindrical mandrel for it when setting the machine.

62. In vertical machines, the central setting of an end mill may also be tested by placing a try square on the table with its blade against the work, using it to measure from to the cutter and then placing it on the opposite side of the work and repeating the measurement.

63. In a vertical machine, any cutter placed on an arbor when applied to work held between the centers, is, as

a general rule, applied on the side. The central setting of such a cutter may be tested by taking cuts across the face of a piece held in the chuck, as was explained in conjunction with Fig. 23, Art. **60.** Another method is to line the cutter by one of the centers, just as is done in a horizontal milling machine. A third and very convenient method is to measure the height of the index centers above the milling-machine table while they are in a horizontal plane parallel to the line of motion. A graduated square, or a try square with a steel rule held against it, may then be applied directly to the cutter.

64. Adjusting Straddle Mills for Width.—The distance between the sides of a pair of straddle mills is adjusted by means of washers. Where rather delicate adjustment for width is required, paper washers of different thickness may be used to good advantage. Good thicknesses to have handy are .001 inch (very thin tissue paper); .002 inch (fine writing paper); .004 inch (heavy writing paper); and .008 inch (medium heavy manila wrapping paper). In addition, sheet-brass or sheet-steel washers .016 inch and .032 inch thick will be found convenient. In some shops, sheet-steel washers are used exclusively; thin sheet steel rolled very exactly to size may now be obtained in thicknesses from .002 inch up. The final adjustment for width of cut for straddle mills must be made by trial whenever the limit of variation is very small; that is, after setting the cutters as accurately as possible, a cut is taken and the width measured. The distance between the cutters is then adjusted in the direction indicated by the measurement.

65. Arranging Gang Mills.—In assembling a gang of mills on an arbor, it is advisable to place them in such relation to one another that adjacent cutting edges will not lie in the same plane. If so placed, the width of the cut will not be excessive, and the effect will be almost the same as that of a cutter with helical cutting edges; that is, the intensity of the shock due to a cutting edge engaging the work is greatly reduced.

ADJUSTING THE AUTOMATIC FEED.

66. On all modern machines that are provided with an automatic feed, a tappet is fitted that may be adjusted to *trip* (stop) the feed at any place within the range of motion of the table. The easiest way of finding the correct position of the tappet is to run the table into a position where the cutter just clears the work. The machine standing still, the feed is tripped by hand by pushing over the part engaged by the tappet; the latter is then brought against the part mentioned and locked to the table.

SPECIAL USES OF THE MILLING MACHINE.

67. Special Operations.—In addition to its legitimate function, many designs of milling machines may be used occasionally for other work, such as drilling, boring, turning, and graduating. In some cases, the milling machine may be used to advantage for these special operations; as a general rule, however, it will be more economical to use a machine primarily built for the purpose. Thus, while it is possible to do quite a variety of turning in some milling machines, even at the best such a machine will only be a makeshift for a lathe.

68. Drilling.—The kind of drilling for which a milling machine can be used to advantage is index drilling; that is, the drilling of holes properly spaced by the aid of the index head. The work is then mounted on the face plate, or held in the chuck, or attached in some other suitable manner to the index head, which is placed so that the axis of its spindle is in the same plane as the milling-machine spindle. The drill used is held in a chuck attached to the milling-machine spindle; it should project as little from the chuck as circumstances permit. In some cases, it is possible to utilize the outboard bearing for steadying a long drill by placing a steadying bushing that closely fits the drill into the bearing and adjusting the latter so that it will be close to the work.

69. When accurate spacing is required, the drill should be followed by a reamer made in the general form of a chucking reamer, but with about twice the clearance in order to prevent it, as much as possible, from following a hole that has been drilled out of line.

70. The feeding, in drilling, is done by moving the table, and, hence, the attached work toward the drill. When all the holes are to be drilled to the same depth, the stop may be used, if one is provided; otherwise, the graduated dial may be employed to indicate when the correct depth has been reached.

71. In making drill jigs, the milling machine may occasionally be used to advantage for spacing the holes correctly, using the graduated dials to indicate the spacing. The accuracy within which the holes will then be located will depend primarily on the accuracy of lead of the different feed-screws, and, also, on the skill used in reaming or boring the holes.

72. Boring.—A cored or drilled hole may be finished by boring with a regular boring bar and cutter, using the outboard bearing for supporting the bar, in case it is rather long. The methods of holding the work and lining it up, and, also, of taking the cut, are exactly the same as are used in a regular boring machine, except that, as a general rule, the feeding will have to be done by hand, since very few milling machines have an automatic feed in the direction of the spindle.

In machines in which the table can be swiveled so that its line of motion will be in the same plane as the axis of the milling-machine spindle, quite a long hole can be finished by boring, and, in that case, the regular automatic feed can generally be used.

73. Turning.—Once in a while, a job will turn up that makes it desirable to turn some part of it in the milling machine. In that case, the turning tool is held in the vise

and the work is attached to the milling-machine spindle; the machine is then used as if it were a lathe.

74. Graduating.—A universal milling machine having graduated dials reading to $\frac{1}{1000}$ inch can be used for a good many jobs of graduating, either on straight or curved surfaces.

For graduating straight surfaces, as rules, for instance, the divisions are obtained by means of the feed-screws, and the length of the graduation lines by means of one of the other feed-screws at right angles to the first. A good way of procedure is to cut all the longest graduation lines first, using a stop to insure that all are of the same length; then cut the next shorter lines, and so on.

75. There are two general methods of marking graduation lines on work, which are the cutting method and the squeezing method. For cutting coarse graduations, a double-angle cutter may be employed; for fine graduation lines a single-pointed tool is clamped to the spindle and used as a planer tool, traversing the work beneath it. The spindle, in that case, is prevented from turning by blocking it in any suitable manner. The objection to cutting graduation lines by planing is that the cut is comparatively rough on account of the rapid dulling of the tool that is induced by the dragging of the cutting point during what may be called the return stroke. This dragging can be overcome by placing the tool into a clapper as used on a planer; this allows the tool point to swing away from the work, thus preserving the point longer.

In regular dividing engines, a diamond is generally used for cutting graduation lines; in that case, there will be no perceptible wear of the tool point with any reasonable use, and very fine graduation lines can be cut.

76. For the ordinary graduating work that a machinist is likely to be called upon to do, it is believed that the most satisfactory results can be obtained by the squeezing method.

Fig. 25 shows a good form of tool for this purpose. It consists of a holder *a* bored to fit the arbor of the milling-machine spindle. The sides of the holder are faced parallel with each other and square with the hole; the end is forked and carries the sharp-edged hardened marking wheel *b*, which is free to turn on a pin, but is confined sidewise by the forks of the holder. The marking wheel should be ground perfectly true after hardening; the angle included between the two faces may vary from 60° to 90°. With the smaller angle, finer graduation lines can be obtained; a wheel with the larger angle will last longer, however.

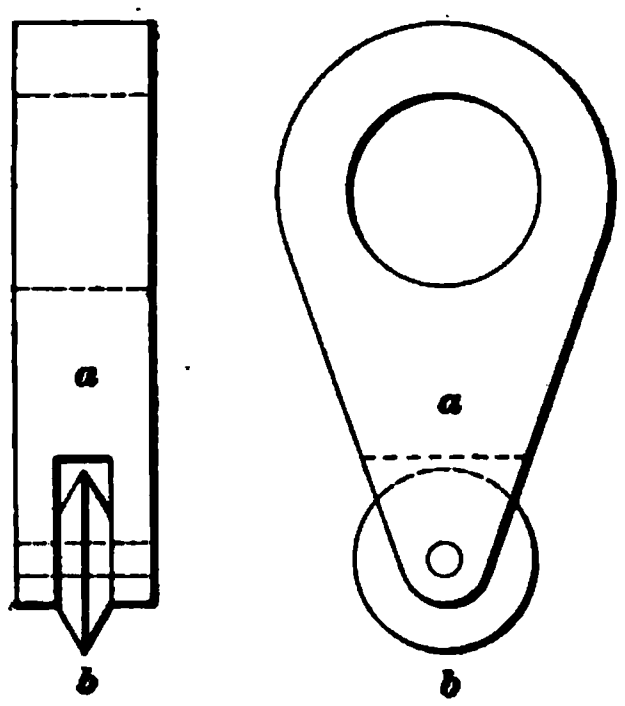

FIG. 25.

77. In use, the holder is clamped to the arbor as if it were a cutter and the spindle is then blocked. The work having been adjusted so that the surface to be graduated is slightly above the edge of the wheel, it is traversed beneath the latter, which rolls or squeezes in a graduation line that has slightly raised edges, which may be removed afterwards by grinding or filing. Fig. 26 is a greatly enlarged cross-section of a graduation line formed by squeezing, and shows the raising up of the edges. It may be said in favor of this method of graduating that the lines will be smooth, and that a tool will last a very long time with reasonable use.

FIG. 26.

78. The index head affords a ready means of dividing circular dials of various kinds into even divisions. The stop to the table, if one is fitted, may be used for regulating the length of the graduation lines; when no stop is available, the reading of the dial on the feed-screw will indicate where to stop feeding in order to make all lines of each set equal in length.

COMPARISON OF MILLING MACHINES.

79. The universal milling machine is essentially a tool-room machine by reason of the large variety of work that may be done on it with the aid of the attachments provided for the purpose. While manufacturing, i. e., milling duplicate work in large quantities, can be done in a universal machine, a heavy, plain, horizontal machine is generally preferable for this work by reason of its lower cost and greater rigidity. It is not to be inferred from this statement that a universal machine is not or cannot be made rigid; the fact of the matter is that the universal machine, not being intended for the heavier class of milling, is not given the same amount and distribution of metal that is put into a machine especially built for heavy plain milling.

80. The vertical type of machine is to be selected for work that is to be largely done by end mills or side mills; the cut being in plain sight of the operator is probably the most valuable feature of the vertical machine.

81. The Lincoln type of machine was developed in armories, and is especially adapted for milling large quantities of relatively small duplicate work requiring comparatively short cuts.

82. The rotary planer is well adapted for long work that requires the ends to be squared up, and is much used for milling the ends of cast-iron columns and of the different rolled sections used in bridge work and structural ironwork. It is also much used for surfacing plane surfaces on heavy work; for instance, facing up the segments of built-up fly-wheels. Its primary function is the production of plane surfaces at right angles to the surface of the table, and it cannot be claimed to be adapted for any other work.

83. The planer type of milling machine is intended for long and heavy cuts with face mills, such as the milling of connecting-rods and side rods for locomotives, the milling of rather wide plane surfaces, beds for machine tools, and

similar work. When supplied with index centers, a great deal of the work done in any other horizontal machine can be done in it, such as the cutting of gears of various kinds, fluting reamers, etc.

84. Multispindle machines are best adapted for work having a number of surfaces so situated in respect to one another that several of them can be operated on simultaneously. They are used considerably for heavy work, and then take the place of a planer with a number of heads; in fact, they are intended for the same class of work.

INDEX

NOTE.—All items in this index refer first to the section and then to the page of the section. Thus, "Acme thread, 5 6" means that acme thread will be found on page 6 of section 5.

A	Sec.	Page
Accuracy of planer work	9	24
Acme thread	5	6
Action of the planer	8	1
Adjustable reamers	10	25
Advantages of a draw-cut on a shaper	9	62
" of milling machines	13	9
Air pressure for pneumatic drills	11	18
Allowance for driving fits	6	35
" for forced fits	6	37
" for shrink fits	6	38
" for sliding fit	6	33
" in roll grooves for hot iron	7	16
Angle, Complement of	16	37
" of clearance	5	23
" of clearance in planer tools	9	1
" of helix	16	20
" of keenness	5	23
" of rake	5	23
" of rake for square-thread tool	5	4
" of rake in planer tools	9	1
" plate, Use of, on lathe	4	12
" plates	8	24
" plates	10	45
" plates, Special	10	46
" plates, Use of, on milling machine	14	16
Angles, Cutting, of boring tools	5	31
" Natural functions of	16	37
Angular milling	13	2
" milling cuts	15	8

	Sec.	Page
Angular milling cutters	13	23
Annular cutters	10	16
" cutters	12	18
" cutters, with spring center	10	17
Application of lubricants to drills	10	19
Apron lathe	3	5
Arbor chuck	15	11
" for index-head use	15	8
" Milling, for use between centers	13	35
" Milling machine	15	8
" press	6	42
" Screw	13	34
" Shell mill	13	34
Arbors, Bushed expanding	15	10
" Care of centers of	6	41
" Driving of work on	6	43
" Expanding	15	9
" for milling cutters	13	31
" Lathe	6	40
" Nut	6	47
" Precautions necessary with	13	33
" Removing of, from milling machine	13	32
" Supporting of milling	13	32
" Use of	6	43
Arms, Facing	4	28
Automatic dies	7	13
" dies for bolt cutters	4	44
" screw machines	7	31
" screw machines, Setting up of	7	32
Axle lathes	7	36

B	Sec.	Page
Back gears double and triple..	3	8
" gears for lathe	3	7
Ball turning	6	50
Bar, boring, Length of.....	11	32
" boring, Location of cutters in.....	11	31
" Boring tapers with a boring.....	4	25
" Boring, with traveling head	11	32
" Simple boring.....	11	30
" Spring of boring..... .	4	24
" Taking cut with a boring	4	24
" Use of boring	4	20
" Vertical boring.....	11	44
Bars, Boring, with fixed cutters	4	21
" Boring, with sliding heads	4	22
" Types of boring.....	4	21
" with fixed tools, Slotter..	9	73
" with tool block, Slotter...	9	75
Bearings, Boring spherical	11	44
Bench lathes.....	7	33
Bent tools.....	5	41
Bevels, Planing of.....	9	16
Bickford experimental feeds and speeds.....	12	35
Block, Adjustable packing	14	25
Blocks, Parallel	10	45
" V.....	8	23
" V.....	10	45
Bolt cutters.....	4	43
" cutters, Lubrication of....	4	45
Bolts and clamps for planer work.....	8	14
" Shape of planer.....	8	16
Bored holes, Measuring.....	4	13
Boring an engine cylinder.....	4	22
" bar, Boring tapers with a...	4	25
" and turning operations	11	27
" bar, Facing head for ...	11	33
" bar, Length of	11	32
" bar, Location of cutters in.....	11	31
" bar, Simple.....	11	30
" bar, Spring of	4	24
" bar, Support of..... .	11	33
" bar, Taking a cut with a	4	24
" bar, Types of.....	4	21
" bar, Use of	4	20
" bar, Vertical.....	11	44
" bar, with traveling head	11	32
" bars for chucking	4	18
" bars with fixed cutters	4	21
" bars with sliding heads	4	22

	Sec.	Page
Boring cored holes by means of flat drills.....	4	15
" cylinders.....	11	40
" cylinders, Machines for	11	41
" Definition of.....	11	30
" Definition of.....	4	1
" duplex pump cylinders, Fixture for.....	12	15
" Finishing cuts by	4	13
" fixture with V guides ..	12	16
" fixtures.....	12	15
" head.....	11	32
" in a milling machine...	16	76
" in the lathe.....	4	1
" large guns, Use of steady rest in	7	54
" locomotive connecting-rods	12	17
" machine, Horizontal...	11	29
" machine, Horizontal...	11	34
" machines, Classes of ...	11	23
" machines, Vertical.....	11	23
" mill	11	23
" mill, Control of feed on	11	25
" mill, Extension.....	11	26
" mill, Horizontal floor...	11	36
" mill table, Special extension arms for.....	12	25
" mill tables.....	11	26
" mills, Milling operations in.....	11	40
" Reasons for facing before.....	4	29
" Roughing cuts in.....	4	13
" small holes.....	5	33
" spherical bearings.....	11	44
" tapers.....	4	25
" tapers with a boring bar.....	4	25
" tool.	4	13
" tool, Shape of.....	4	24
" tools.....	4	14
" tools...	5	31
" tools.....	5	42
" tools, Cutting angles of	5	31
" tools, Height of.	5	32
" tools, Holders for	5	42
" tools, Spring of.....	5	32
Bottoming tap.....	4	46
Box tool, Finishing.....	7	7
" tool, Roughing.....	7	6
Braces for high planer work	8	30
Bracing of a milling machine..	16	63
Brass, Cutting speed for.....	6	9
" reamers	10	21
" Tools for..	5	48

	Sec.	Page
Brass work, Tools for	5	30
British standard thread	4	36
" standard thread	4	40
" standard threads, Cutting	5	3
" standard threads, Tool for	5	8
Broaching, Machine	9	81
Brown & Sharpe taper	3	33
Brush, Lubrication by	14	2

C	Sec.	Page
Calculating change gears for screw cutting	4	47
" change gears for spiral heads	16	25
Calculation of cutting speed	6	11
Caliper, Setting inside	4	13
" tool	3	37
Calipers, Measuring with inside	4	14
" Use of	3	30
Calipering threads	4	62
" work	3	32
Cam-cutting attachment for milling machine	16	46
" Face	16	45
" Grooved	16	45
" Grooved face	16	46
" Grooved side	16	46
" Side	16	45
Cams, Classification of	16	45
" Turning of	6	51
Cannon drill	4	16
Card, File	7	43
Care of milling cutters	13	30
" of reamers	10	24
Carriage, Lathe	3	5
Cast-iron, Cutting speed for	6	9
Castings, Inspecting chilled-iron	7	1
Cat head	7	48
Center, Cone	7	42
" countersinks	10	30
" Cup	11	17
" drills	10	34
" drilling	10	6
" Forked	7	42
" holes, Correctly formed	3	17
" holes, Influence of depth of, on tapers	3	40
" marks, Changing	3	15
" pad	7	42
" reamer	3	17
Centers, Care of lathe	7	46
" Drilling and reaming	3	16
" Forming of	3	15
Centers for turning crank-shafts, Laying out	6	52
" Grinding lathe	6	28
" Heavy, for supporting work while drilling	12	21
" Holding work between	3	18
" Lathe	6	26
" Lathe, Objections to setting over	3	39
" Lining milling	14	38
" Lining of lathe	6	30
" Locating, by dividers	3	12
" of arbors, Care of	6	41
" on milling machine, Work done between	14	37
" Planer	8	23
" Precautions in placing work on	3	18
" Testing location of	3	14
Centering by cup centers	3	13
" by hermaphrodites	3	14
" by surface gauge	3	12
" machines	3	15
" work	3	12
Change gears for screw cutting, Calculating of	4	47
" gears for simple-geared lathe, Selecting	4	49
" gears, Function of	4	47
Chasing threads in monitor lathes	7	23
Chattering, Cause of	5	46
" Prevention of, in forming tools	7	19
" Remedies for	5	47
Chilled-iron castings, Inspecting	7	1
" iron, Cutting off tools for	7	6
" iron, Cutting speed for planing	7	22
" iron, Cutting speeds for	7	8
" iron, Depth of cut in planing	7	22
" iron dies, Planing of	7	23
" iron, Feeds for	7	8
" iron, Holding tools for	7	7
" iron, Planing	7	20
" iron, tools for, Grinding of	7	5
" iron, Turning tools for	7	4
" rolls	7	9
" rolls, Grinding of	7	17

	Sec.	Page
Chilled rolls, Grooving tools for	7	13
" rolls, Holding and driving of, in lathe	7	2
" rolls, Holding of, in lathe	7	11
" rolls, Lathes for turning hollow parallel	7	1
" rolls, Machine for grinding	7	17
" rolls, Speed of, in grinding	7	19
" rolls, Tool for corrugating	7	22
" rolls, Turning tools for	7	12
" rolls, with concentric grooves, Turning	7	9
Chisel, Drawing	12	2
Chuck, Arbor	15	11
" Collet	13	36
" Holding work in, on milling machine	15	1
" Lathe	4	1
" lathe, Special	4	7
" Light drill	10	39
" Milling machine	15	1
" milling, Precautions in using	15	7
" milling, Relation of thread in, to position of cutter	15	7
" Planer	8	7
" screw machine	7	3
" Self-centering, for milling machine	15	2
" Setting work in an independent	4	4
" Split vise	14	33
Chucks, Advantages of different classes of	4	4
" Automatic reverse tapping	10	42
" Care of lathe	4	7
" Combination	4	2
" for milling work	13	37
" Holding work in	4	1
" Independent	4	3
" lathe, Classification of	4	2
" Special toolmakers'	7	33
" Truing of planer	8	13
" Universal	4	2
" Use of	4	4
Chucking, Boring bars for	4	18
" frail work	4	6
" on the face plate	4	8
" reamers	4	17
Chucking reamers, Shell	4	17
" reamers, Starting true	4	19
" tools	4	14
" tools	7	25
" tools, Methods of holding	4	14
" Use of steady rest in	7	53
" work having concentric surfaces	4	5
Circular milling attachment	16	41
" parallel strips	12	18
Clam-shell tool	9	3
Clamp, Polishing	7	47
" Special, for pulley arm	4	12
Clamping, Adjustable packing block for	14	25
" on drill press, Necessity of rigidity in	10	47
" planer tools	9	9
" round work on the planer	8	21
" Spring of work in	8	27
" tools for turning chilled rolls	7	15
" work by gluing	8	28
" work on milling machine	15	17
" work on slotting machine	9	71
" work on the shaper	9	55
" work to face plate	4	10
" work to the milling machine	14	13
Clamps, Bent, for planer work	8	16
" C	10	46
" Finger	8	18
" for planer work	8	14
" milling machine, Necessity for great rigidity in	14	13
" Plane	10	43
" U	8	17
" U	10	44
Classes of drills	10	6
" of lathes	3	3
" of shapers	9	46
Classification of milling cutters	13	10
" of milling machines	13	2
" of milling operations	13	1
Clearance angle for a side tool	5	29
" Angle of	5	23

	Sec.	Page
Clearance, Angle of, in planer tools	9	1
" angle of twist drill, Measuring	12	8
" Effect of height of tool on	5	28
" face of twist drills, Form of	12	11
Collet chuck	13	36
" Plain	13	36
Collets	7	33
"	10	37
Column shapers	9	46
Combination chucks	4	2
Compound geared lathes for thread cutting	4	54
" gearing for cutting spirals	16	28
" gears for screw cutting, Calculating	4	58
" indexing	15	27
" rest for boring tapers	4	25
" rest, Setting the	3	46
" rest, Use of	3	45
Cone center	7	42
Conical spiral	13	14
Connecting-rods, Drilling and boring locomotive	12	17
Cored holes, Boring, by means of flat drills	4	15
Corliss engine-cylinder boring machine	11	41
Corrugating rolls	7	20
" rolls, Machine for	7	21
Cosine	16	37
Cotangent	16	38
Cotter mill	13	26
Counterbore	10	30
" Double ended cutter	10	30
" for light work	10	31
" Single-ended cutter	10	31
" Special	10	32
" with changeable tool	10	31
Counterboring	10	5
"	10	30
"	12	7
Countershaft, Variable speed for planer	9	21
Countersink and reamer, Combination	10	30
" Drill as a	10	28
" Pin	10	28
Countersinking	10	5
"	10	28
"	12	7
Countersinks	10	28
" Center	10	30
Crank-driven shaper	9	46
" shaft, Turning a	6	50
Cross-rails, Errors in planer	9	25
Cup center	11	17
" centers, Centering by	3	13
Curved surfaces, Planing	9	29
Cut, Depth of, of reamer	10	22
" Depth of, on planer	9	11
" Finishing, with side tool	3	23
" Influence of diameter on resistance to	6	7
" Roughing	3	22
" Running out of, in milling	16	62
" Starting of, in milling	16	61
" Taking of, on shaper	9	55
" Tools for finishing, in cylinder boring	11	41
Cuts, Angular milling	15	8
" Classification of	3	22
" Finishing	5	26
" Finishing	6	7
" Finishing, with diamond-pointed tool	3	30
" on planer, Down	9	13
" on planer, Side	9	13
" Roughing	5	26
" Roughing	6	6
" Roughing, with diamond-pointed tool	3	28
Cutter, Cutting edge of milling	13	12
" Fly	13	27
" for milling polygon, Determination of kind of	15	3
" for milling squares, Determination of kind of	15	3
" Front face of milling	13	12
" Gear-tooth	13	28
" milling, Internally lubricated	14	5
" milling, Left-handed	13	10
" milling, Relation of diameter of, to time on work	14	8
" milling, Selection of	14	6
" milling, Setting central	16	70
" milling, Setting sidewise	16	70

	Sec.	Page
Cutter, milling, Setting the ..	16	66
" Milling, with interlocking teeth.....	13	27
" Parts of milling.....	13	12
" Pitch of milling.....	13	12
" Right-handed milling	13	10
" Rule for placing of....	16	52
" Screw slotting.....	13	11
" Top face of milling....	13	12
Cutters, Angular milling.....	13	23
" Annular.....	10	16
" Annular.....	12	18
" Boring bars with fixed	4	21
" Care of milling.....	13	30
" Classification of milling.....	13	10
" Classification of milling.....	13	26
" Cylindrical milling...	13	13
" End milling	13	25
" for cutting helixes....	16	32
" for cutting spirals.....	16	32
" for helical grooves, with inclined sides..	16	33
" for helical grooves, with one side radial	16	34
" for helical grooves, with parallel sides..	16	33
" for spot facing.....	10	33
" Form milling.....	13	26
" Formed gang.....	13	29
" Formed milling.....	13	27
" Keyway	9	79
" Location of, in boring bar.....	11	31
" Milling	13	10
" milling, Arbors for ...	13	31
" milling, Built-up plain	13	15
" milling, Double-angle	13	24
" milling, Driving of....	13	33
" milling, for slots.....	13	22
" milling, Holding of...	13	31
" milling, Inserted blade type of	13	16
" milling, Inserted tooth type of.	13	17
" milling, Threaded....	13	19
" Milling, with helical cutting edges.....	13	12
" Milling, with straight edges.....	13	12
" Necessity of keeping milling, sharp.....	13	30
" Offset of double-angle in cutting spirals....	16	36
" Parallel milling.....	13	13

	Sec.	Page
Cutters, Plane milling..... ..	13	11
" Plane milling	13	13
Cutting a keyway on shaper...	9	56
" angle of twist drill, Measuring.....	12	8
" angles of boring tools	5	31
" British standard threads.....	5	3
" double thread.....	5	11
" edge, Drill with a single.....	10	8
" edge, for drill, Symmetrical	10	10
" edge of milling cutter	13	12
" edges for reamers, Number of.....	10	21
" feed.....	6	10
" fractional threads.....	4	53
" gears on the slotter ...	9	77
" internal screws.....	5	12
" off tool..... ..	5	38
" off tools for chilled iron	7	6
" principle of planer tools	9	1
" racks on a keyway cutter.....	9	80
" racks on the shaper...	9	59
" Reversible milling....	13	12
" screw threads.....	4	41
" screws on the lathe....	4	47
" Side milling..... ..	13	18
" Single-angle milling..	13	23
" speed	6	1
" speed, Effect of keenness of tool on.....	6	6
" speed, Effect of kind of metal on.....	6	3
" speed for brass.....	6	9
" speed for cast iron ...	6	9
" speed for drilling, Variable.....	11	1
" speed for planing chilled iron.....	7	23
" speed for steel.....	6	9
" speed for wrought iron	6	9
" speed. Influence of style of shaper on...	9	53
" speed, Limits of.....	6	2
" speed of the planer...	9	20
" speed, Relation of self-hardening steel to...	6	8
" speed, Relation of, to speed of work.....	6	1
" speeds, Average	6	8
" speeds, Calculation of	6	11
" speeds for chilled iron	7	8

	Sec.	Page
Cutting speeds for milling.....	18	40
" speeds for radial facing	4	28
" speeds of drills.....	12	33
" speeds of shapers.....	9	53
" speeds, Table of.....	18	45
" square threads.....	5	4
" T slots on the planer..	9	19
" taper threads.....	6	31
" the thread, Operation of.....	4	61
" threads by hand.....	4	41
" threads, Spring of tool in.....	5	7
" to a shoulder on a shaper.....	9	57
" tools, Forms of.....	5	33
" tools, Theory of.....	5	19
" triple thread.....	5	11
" U. S. standard threads	5	3
" wedge.....	5	19
Cylinder boring.....	11	40
" Boring an engine.....	4	22
" boring machine, Vertical	11	43
" boring, Machines for	11	41
" boring, Tools for.....	11	41
Cylinders, Fixture for boring duplex-pump.....	12	15
Cylindrical milling cutters....	18	18
" work, Fitting of...	6	33

D	Sec.	Page
Deep holes, Reamers for.....	4	17
Depth of cut of reamers.....	10	22
" Setting the milling cutter for....	16	66
Dial, index, Effect of rotating, on spiral head.....	16	3
Diameter of a thread.....	4	29
" of bottom of V thread	4	33
" of bottom of U. S. standard thread...	4	34
" of tap drill for V thread.....	4	33
Diamond-pointed graver.....	5	47
" pointed tool.....	3	24
" pointed tool.....	5	33
" pointed tool, Adjusting the.....	3	31
" pointed tool, Finishing cuts with.....	3	30
" pointed tool, Grinding a.....	3	25
" pointed tool, Height of.....	3	26
" pointed tool holder..	5	37
Diamond-pointed tool, Precautions in setting.....	3	28
" pointed tool, Roughing cuts with.....	3	28
" pointed tool, Setting.....	3	26
Die holders for screw machines	7	8
Dies, Automatic.....	7	13
" for bolt cutters, Automatic.....	4	44
" for screw machines.....	7	8
" Hand.....	4	42
" Planing of chilled-iron...	7	23
" Spring.....	7	13
Differential indexing.....	16	1
" indexing, Tables for.....	16	5
Direct indexing.....	15	21
Dividers, Locating centers by	3	12
Divisions obtainable with planer centers.....	8	24
Dog, Action of bent-tailed, in springing work.....	6	21
" Advantage of straight-tailed.....	6	23
" Milling-machine.....	14	45
Dogs, Equalizing.....	6	24
" Toe.....	8	20
Double thread.....	4	30
" thread, Cutting.....	5	11
Dovetails, Planing.....	9	36
Down cuts on planer.....	9	13
Draw-cut, Advantages of a....	9	62
" cut shaper.....	9	61
Drawing chisel.....	12	2
Drill, Advantage of thin point	10	11
" Angle and length of scraping edge of.....	12	9
" as a countersink.....	10	28
" Cannon.....	4	16
" chuck, Heavy.....	10	40
" chuck, Light.....	10	39
" collets.....	10	37
" Development of, from lathe.....	10	2
" Development of modern	10	2
" Early forms of.....	10	7
" Flat.....	10	7
" Flat, with parallel sides	10	11
" grinding.....	12	8
" Grooved point for.....	10	11
" Measuring cutting and clearance angles of twist.....	12	8
" point, Form of.....	12	8
" Post.....	11	35

	Sec.	Page
Drill, Prehistoric	10	1
" press, Adjusting work on	12	2
" press, Driving gear for	11	2
" press, Feed for	11	4
" press, Feed-mechanism for	11	5
" press, Heavy type of	11	5
" press, Medium type of	11	2
" press, Securing work on table of	10	42
" press, Table for	11	5
" press table, Rectilinear adjustment of	11	6
" press vise	10	46
" Radial, with outer column	11	9
" shank	10	12
" shanks	10	17
" shanks, Straight	10	17
" socket, Key-grip	10	39
" socket, Pin-grip	10	37
" socket, with setscrew	10	35
" sockets	10	37
" spindle, Movable	11	2
" Spiral	10	13
" Starting a	12	2
" Starting a twist	4	19
" Symmetrical cutting edge for	10	10
" Trepanning	12	24
" Twist, grinding machine	12	10
" Universal radial	11	11
" with double scraping edge	10	8
" with single cutting edge	10	8
Drilled hole, Causes of irregularity in	10	4
Drilling, Advantages of power feeds for	12	3
" and boring, Distinction between	11	30
" and boring locomotive connecting-rods	12	17
" and boring machine, Horizontal	11	34
" and boring machines, Horizontal	11	29
" and reaming centers	8	16
" in a screw machine	7	14
" and tapping device, Safety	10	41
" Center	10	6
" deep holes	12	4
" Double face plate for supporting work during	12	22
Drilling duplicate pieces	12	11
" fixtures	10	47
" Heavy centers for supporting work during	12	21
" in a milling machine	16	75
" jig, Construction of	12	12
" jig for flanges, with irregularly spaced holes	12	13
" jig for flanges, with regularly spaced holes	12	12
" jigs	10	47
" jigs	12	11
" jigs for irregular surfaces	12	14
" Laying out work for	12	1
" Lead holes for	12	3
" machine, Adjustable table for	11	1
" machine, Horizontal flange	11	16
" machine, Multiple-spindle	11	13
" machine, Simple	11	1
" machine, Vertical-flange	11	15
" machines, Essential parts of	10	3
" machines, Principal functions of	10	4
" operations	12	1
" parts together	10	47
" Roller supports for work during	12	20
" solid material	4	19
" tools	10	6
" tools, Devices for holding	10	35
" Trunnion supports for work during	12	23
" Variable cutting speed for	11	1
" Variable feed for	11	2
" vise, Universal	10	46
Drills, Application of lubricants to	10	19
" Center	10	34
" Classes of	10	6
" Classes of portable	11	18
" Common characteristics of	10	6
" Cutting speeds of	12	33
" Devices for holding	10	35
" Driving gear for radial	11	8

	Sec.	Page
Drills, Electric	11	19
" Flat	10	9
" Flat	4	15
" Flexible shaft	11	20
" for pipe taps	12	35
" keyway	10	15
" Lipped	10	12
" Lubrication of	10	18
" Machine shop	10	9
" Pneumatic	11	18
" Portable	11	17
" Provision for supplying lubricants to	10	19
" Radial	11	7
" Recent tests of twist	12	35
" Result of improperly formed, on size of hole	10	9
" Sensitive	11	16
" Slot	10	15
" Speed and feed of	12	32
" Straight-fluted	10	14
" Tap	12	34
" Taper-shank	10	36
" Taper-shank for	10	18
" Teat	10	15
" Turned	4	16
" Twist	10	13
" Twisted flat	10	13
Driving fits	6	35
Drunken thread	6	31

E	Sec.	Page
Electric drills	11	19
Ellipses, Turning	6	53
Emery, Use of, for polishing	7	45
End mill, Undercutting of	16	60
" mills, Slotting with	16	56
" milling cutters	13	25
Engine cylinders, Boring	4	22
" lathe	3	3
" lathe, Turret applied to	7	24
Equalizing dogs	6	24
Erecting a planer	9	24
Error in pitch of thread	5	15
" in planer cross-rail	9	25
Errors in lathe work	6	16
" in milling	14	10
" in screw cutting	6	30
" in taper thread	6	31
" in the lathe	6	25
" in the planer platen	9	24
Expanding arbors	15	9
" mandrels	6	44
Expansion reamer	10	26
Extension boring mill	11	26
External thread	4	41

F	Sec.	Page
Face cams	16	45
" plate, Chucking on the	4	8
" plate, Clamping work to	4	10
" plate, Double, for supporting work while drilling	12	22
" plate, Holding work on, while milling	15	12
" plate, Lining of, on milling machine	15	12
" plate, Preventing slipping of work on	4	11
" plate, Use of paper on	4	11
" plates, Adjustable jaws for	4	8
Facing	10	6
"	12	7
" arms	4	28
" before boring	4	29
" Cutting speed for radial	4	28
" head for boring bar	11	33
" plates for milling work	13	37
" Precautions in radial	4	27
" Radial	4	26
" Radial, Tools used in	4	27
" Spot	10	5
" Spot	10	33
" spot, Lower side of a flange	10	34
False jaw for planer chuck	8	9
Fastening work to planer platen	8	7
Feed, Adjusting automatic, in milling	16	75
" Adjustment of, in milling	16	65
" Arrangement of, on boring mill	11	25
" Control of, on boring mill	11	25
" Cutting	6	10
" Direction of, in milling	16	50
" Direction of, in milling work with hard surfaces	16	51
" for drill press	11	4
" for drill press, Power	11	5
" for drilling, Variable	11	2
" for radial drills	11	8
" Hand lever for drill-press	11	5
" Influence of slipping of work on direction of	16	54

	Sec.	Page
Feed, Influence of spring of work on direction of...	16	52
" mechanism for drill press	11	5
" mechanism for lathe....	3	5
" motion, Action of.....	9	10
" motion, Details of planer	9	10
" of drills.	12	32
" motion for lathe, Reversing the.....	3	6
" Relation of material being cut to.....	6	10
" Rule for direction of.....	16	52
" screw supports for lathe	3	11
" Signs of excessive, in milling.....	16	66
" tables, Construction of..	16	65
Feeding milling cutters into corners.....	16	59
Feeds, Advantage of coarse..	6	15
" Bickford experimental.....	12	35
" for chilled iron.....	7	8
" for drilling, Advantages of power.....	12	3
" for drilling, Power.....	11	2
" for milling.....	13	42
" for planer cuts.....	9	11
Female thread.....	4	41
File card.	7	43
Files for lathe work.....	7	43
" Pinning of.....	7	43
" Prevention of pinning of.....	7	43
Filing in a lathe.....	7	43
" Speed of work during..	7	44
Finger clamps.....	8	18
Finishing, Advantage of broad-nosed tool for.....	5	27
" box tool.....	7	7
" cuts	5	26
" cuts.....	6	7
" cuts in boring.....	4	13
" cuts, Feeds for, on planer.....	9	11
" tool, Special forms of.....	9	8
Fitting a taper.....	3	49
" a V thread.....	4	62
" cylindrical work	6	33
Fits, Driving	6	35
" Forced	6	36
" Shrink	6	38
" Sliding.....	6	33
Fixture for boring duplex-pump cylinders.....	12	15
Fixtures, Drilling.....	10	47
" for supporting and rotating work while drilling.. ...	12	19
Flange drilling machine, Horizontal	11	16
" drilling machine, Vertical.....	11	15
" spot, Facing lower side of.....	10	34
Flanges, Drilling jigs for.....	12	12
Flat drill.....	10	7
" drill holder.....	4	15
" drills.....	10	9
" drills.....	4	15
" drills, Twisted.....	10	13
" reamers	10	20
" reamers	4	15
" reamers	4	16
" turret lathe	7	29
Flexible shaft drills.....	11	20
Fluted reamers.....	10	20
" reamers.....	4	16
Fly cutter.....	13	27
Flywheels, Shaper for fitting joints of.....	9	65
Follower rests.....	7	49
Foot-plate for radial drill.....	11	9
Forced fits.....	6	36
Forged finishing tool for planer.....	9	3
" roughing tools for planer.....	9	2
" threading tools.....	5	40
" turning tools.....	5	33
Forked center.....	7	42
Form milling.....	13	2
" milling cutters	13	26
Formed gang cutters	13	29
" milling cutters.....	13	27
Forming blades, Special.....	7	20
" heads, Special, for screw machine.....	77	19
" tools.....	5	44
" tools, Circular, for screw machine.....	7	15
" tools, Straight-face, for screw machine	7	17
" tools, Vertical slide..	7	17
Fractional indexing.....	16	12
" indexing, Tables for.....	16	16
Franklin Institute standard thread	4	37
Front tool.....	3	24
Functions, Natural.....	16	37

G	Sec.	Page
Gang cutters, Formed	13	29
" mills	13	18
" mills, Arranging of	16	74
" planer tools	9	5
Gap lathes	7	35
Gauge, Stop, for screw machine	7	6
" surface, Centering by	3	12
" surface, Use of, in planing	8	11
" Testing inside threads with	5	14
" Thread	4	60
" U. S. standard thread	5	1
Gauges for setting planer tools	9	24
" Use of, for bored holes	4	13
Gear cutting on the slotter	9	77
" tooth cutter	13	28
Geared shaper	9	49
Gearing, Calculating compound for screw cutting	4	58
" Compound, for cutting spirals	16	28
" Double and triple back for lathe	3	8
" Simple, for thread cutting	4	52
" Single, for cutting spirals	16	27
Gears, Back, for lathe	3	7
" Calculating change, for screw cutter	4	47
" Change for simple-geared lathe, Selecting	4	49
" Change, Function of	4	47
Gib milling jig	15	17
Gluing, Clamping work by	8	26
Goose-necked tool	5	45
Graduations, Planer-head	9	17
Graduating in a milling machine	16	77
Graver, Diamond-pointed	5	47
" Round-nosed	5	48
Gravers	5	47
Grinders, Tool	5	49
Grinding a diamond-pointed tool	3	25
" a threading tool for V thread	4	60
" chilled rolls	7	17
" chilled rolls, Machine for	7	17
" diamond-pointed inserted-blade tools	5	37
" drills	12	8
Grinding lathe centers	6	28
" machine, J. Morton Poole	7	19
" the side tool	3	19
" turning tools for chilled iron	7	5
" twist drill, Precautions in	10	14
" twist drills	12	10
" wheels for chilled rolls	7	19
Grooved cam	16	45
" face cam	16	46
" side cam	16	46
Grooves, helical, with inclined sides, Cutters for	16	33
" helical, with one side radial, Cutters for	16	34
" Production of spiral, in chilled rolls	7	21
" spiral, Direction of rotation of work while cutting	16	35
" with parallel sides, helical, Cutters for	16	33
Grooving	13	2
" tools for chilled rolls	7	13
" work held in chuck	15	2
Guns, Building up large	6	39
" Use of steady rest in turning and boring	7	54

H	Sec.	Page
Hand dies	4	42
" lathes	7	41
" tapping	4	46
" taps	4	46
" tools	5	47
Head, Boring	11	32
" Boring, bar with traveling	11	32
" Facing, for boring bar	11	33
" Setting of planer, at an angle	9	16
Heads, Planer	8	1
" Planer	8	6
Heat, Cause of, in cutting metal	6	4
" Effect of, on cutting speed	6	3
" generated in cutting metal	6	3
Height, Correct, for threading tool	5	8
" of a thread	4	29

	Sec.	Page
Height of boring tools	5	32
" of diamond-pointed tool	3	26
" of tool, Effect of, on clearance	5	28
" of tool, Effect of, on rake	5	28
" of tool, Effect of, on strength	5	29
" of tool, in turning taper work	3	47
Helical grooves, Direction of rotation of work while cutting	16	35
" grooves with inclined sides, Cutters for	16	33
" grooves with one side radial, Cutters for	16	34
" grooves with parallel sides, Cutters for	16	33
Helix	16	20
" Angle of	16	20
" Definition of	13	14
" Lead of	16	20
" Pitch of	16	20
Helixes, Cutters for	16	33
Hermaphrodites, Centering by	3	14
Hob for British standard thread tool	5	4
Holders for boring tools	5	42
" for turning tools	5	37
Holding tools for turning chilled rolls	7	15
" work between centers	3	18
" work on shaper	9	54
Hole, Effect of improperly formed drill on	10	9
Holes, Advantage of large tap	4	64
" Boring small	5	33
" drilled, Causes of irregularity in	10	4
" Drilling deep	12	4
" Lead	12	3
" Measuring bored	4	13
" Size of tap	12	6
Hollow mills	7	12
Horizontal boring and drilling machine	11	34
" drilling and boring machines	11	29
" flange drilling machine	11	16
" floor mills	11	36
Housings, Planer	8	1
Housings, Planing work too wide for	9	28
Hubbing tool	12	25

I	Sec.	Page
Independent chucks	4	3
Index centers, Plain	14	34
" centers, Types of	14	34
" circle, Selecting of	15	23
" crank, Calculating turns of	15	22
" dial, Effect of rotating on spiral head	16	3
" head, Adjustable	14	43
" head, Arbor for	15	8
" head for spiral work	16	22
" head, Spiral, for milling machine	14	37
" head, Universal, for milling machine	14	36
" plate, Use of sector on	15	25
" tables	15	26
Indexing, Calculating moves for compound	15	27
" Compound	15	27
" compound, Simplifying moves for	15	29
" Differential	16	1
" differential, Tables for	16	5
" Direct	15	21
" Effect of change of elevation of head on	15	26
" Fractional	16	12
" Indirect	15	21
" mechanism, Construction of	15	21
" mechanism, Stop-pin for	15	22
" Simple	15	21
" Spiral head for	16	1
Inserted blade reamers	10	24
" blade side mills	13	19
" tooth side mills	13	20
Inside screw cutting	5	12
" screw cutting, Stop for	5	13
" threads, Testing	5	13
Inspecting chilled-iron castings	7	1
Internal stresses in planer work, Errors caused by	9	26
" thread	4	41
Iron, Allowance for hot, in roll grooves	7	16
" cast, Cutting speed for	6	9

	Sec.	Page
Iron, Planing chilled	7	20
" wrought, Cutting speed for	6	9

J	Sec.	Page
Jack, Screw	10	44
Jacks for high work on planer	8	30
" Planer	8	25
Jaw, False, for planer chuck	8	9
Jaws, False, for vise	14	29
" Special, for planer chucks	8	13
Jig, Construction of drilling	12	12
" for drilling flanges with irregularly spaced holes	12	13
" for drilling flanges with regularly spaced holes	12	12
" Gib milling	15	17
" Splining	15	14
Jigs, Drilling	10	47
" Drilling	12	11
" for holding work on planer	8	29
" for irregular surfaces, Drilling	12	14
" milling, Holding work in	15	14
" Multiple milling	15	17
" Purpose of milling	15	14

K	Sec.	Page
Keenness, Angle of	5	23
" Angle of, in lathe tools	5	24
" of planer tools	9	2
Key seats, Clamping work for planing	8	21
Keyway, Clamping work for milling	14	23
" cutter, Cutting racks on a	9	80
" cutters	9	79
" Cutting, on shaper	9	56
" drills	10	15
" milling jig	15	14
Knife tool	3	19

L	Sec.	Page
Lathe, Advantage of using same, in fitting threads	4	65
" Apron	3	5
" arbors	6	40
" Back gears for	3	7
" Boring cone pulleys in turret	7	29
Lathe, Boring in the	4	1
" carriage	3	5
" centers	6	26
" centers, Care of	7	46
" centers, Grinding of	6	28
" centers, Lining of	6	30
" centers, Objections to setting over	3	39
" chuck	4	1
" chuck, Selection of, for work	4	4
" chuck, Setting work in an independent	4	4
" chuck, Special	4	7
" chucks, Care of	4	7
" chucks, Classification of	4	2
" chucks, Use of	4	4
" Compound-geared, for thread cutting	4	54
" Control of speed of	3	7
" Cutting screws on	4	47
" Cutting threads without reversing	4	67
" Development of drill from	10	2
" Engine	3	3
" Errors in	6	25
" Feed-mechanism for	3	5
" Feed-screw supportsfor	3	11
" for heavy work, Turret	7	25
" for turning grooved rolls	7	9
" Gap	7	35
" Hand	7	41
" Hand screw machine	7	3
" Names of parts of	3	3
" Precision	7	35
" Pulley	7	40
" rest, Plain	3	21
" rest, Rise and fall	3	20
" rest, Weighted	3	21
" Returning a partly cut screw to	4	65
" Reversing feed-motion for	3	6
" saddle	3	5
" Selecting change gears for simple-geared	4	49
" Shafting	7	50
" Simple-geared	4	51
" Slide rest for	3	2
" Special forms of	7	32
" Special forms of turret	7	24
" Special geared, for screw cutting	4	67
" Special taper turning	3	45

	Sec.	Page
Lathe, Speed	7	41
" tailstock	3	10
" Toolmakers'	7	32
" tool, Position of	6	17
" Tool post for	3	11
" tools, Angles of rake and keenness of	5	24
" tools, Spring of	6	16
" Turret	7	1
" Turret applied to engine	7	24
" Turret for large bar work	7	29
" turret, Types of	7	3
" Two-spindle	7	35
" Universal monitor	7	22
" Use of angle plate on	4	12
" Wheel	7	39
" work, Errors in	6	16
" work, Files for	7	43
" work, Steady rest for	7	47
Lathes, Accuracy of new	6	26
" Axle	7	36
" Bench	7	33
" Blocking up of	7	36
" Classes of	3	3
" Development of	3	2
" Early forms of	3	1
for turning hollow parallel chilled rolls	7	1
" Planing the ways of	9	39
Laying out centers for turning crank-shafts	6	52
" out work for drilling	12	1
Lead holes	12	3
" of milling machine	16	25
" of spiral	16	20
" screw, Function of	4	47
" screws, Errors due to imperfect	6	30
" screws, Straightening	7	53
Left-handed thread	4	30
Level, Use of, in setting work on planer	8	28
Lincoln type of milling machine	14	26
Lining centers for tapered work	14	46
" lathe centers	6	30
Links, Planing	9	30
Lipped drills	10	12
Locomotive connecting-rods, Drilling and boring	12	17
Lubricants for milling	14	2
" Provisions for supplying, to drills	10	19
Lubrication, Materials requiring	14	1
" Methods of	14	2
" of bolt cutters	4	45
" of drills	10	18
" of drills	12	7
" of milling cutters	14	1
" Purpose of	14	1

M	Sec.	Page
Machine broaching	9	81
" Characteristic features of the slotting	9	68
" Construction of milling	13	4
" Essential parts of milling	13	4
" for corrugating rolls	7	21
" for grinding chilled rolls	7	17
" for grinding twist drills	12	10
" ground tools	5	49
" Hand screw	7	3
" Horizontal boring and drilling	11	34
" Horizontal flange drilling	11	16
" Milling	13	1
" reaming	12	5
" shop drills	10	9
" Simple drilling	11	1
" Slotting	9	68
" slotting, Setting the ram of	9	70
" tapping	4	46
" tools, Heavy portable	11	21
" Universal milling	13	3
" Vertical boring	11	23
" Vertical cylinder boring	11	43
" Vertical flange drilling	11	13
" Work of turret screw	7	5
Machines, Advantages of milling	13	9
" Centering	3	15
" Classification of milling	13	2
" drilling, Essential parts of	10	3
" drilling, Principal functions of	10	4
" for boring cylinders	11	41
" Horizontal drilling and boring	11	29

	Sec.	Page
Machines, Multiple-spindle milling	13	3
" Plane milling	13	2
" Special milling	13	4
" Straightening	7	51
" Vertical milling	13	3
Male thread	4	41
Mandrels	6	40
" Expanding	6	44
Materials requiring lubrication	14	1
Measuring bored holes	4	13
" screw threads	4	31
" with inside calipers	4	14
Metal, Cause of heat in cutting	6	4
" Effect of character of, on shape of tools	5	25
" Effect of hardness of, on shape of tools	5	25
" Effect of kind of, on cutting speed	6	3
Mill, Boring	11	23
" Cotter	13	26
" end, Undercutting of	16	60
" Turning	11	23
Milling, Adjusting the automatic feed in	16	75
" Adjustment of feed in	16	65
" Adjustment of speed in	16	64
" against a shoulder	16	59
" Angular	13	2
" attachment, Circular	16	41
" attachment for planer	16	48
" attachment, Special	16	41
" attachment, Vertical	16	43
" centers, Lining of	14	38
" chuck, Precautions in using	15	7
" chuck, Relation of thread in, to position of cutter	15	7
" circular work in chuck	15	5
" Construction of feed-tables for	16	65
" cut, Running out of	16	62
" cuts, Angular	15	8
" cutter, Cutting edge of	13	12
" cutter, Fly	13	27
" cutter, Front face of	13	12
" cutter, Gear-tooth	13	28
" cutter, Interlocking tooth	13	27
" cutter, Internally lubricated	14	5
" cutter, Left-handed	13	10
Milling cutter, Pitch of	13	12
" cutter, Relation of diameter of, to time on work	14	8
" cutter, Right-handed	13	10
" cutter, Rule for placing of	16	52
" cutter, Selection of	14	6
" cutter, Setting central	16	70
" cutter, Setting sidewise	16	70
" cutter, Setting the	16	66
" cutter, Top face of	13	12
" cutters	13	10
" cutters, Angular	13	23
" cutters, Arbors for	13	31
" cutters, Built-up plain	13	15
" cutters, Care of	13	30
" cutters, Classification of	13	10
" cutters, Classification of	13	26
" cutters, Cylindrical	13	13
" cutters, Double angle	13	24
" cutters, Driving of	13	33
" cutters, End	13	25
" cutters, Feeding of, into corners	16	59
" cutters, Form	13	26
" cutters, Formed	13	27
" cutters, Formed gang	13	29
" cutters, for slotting	13	22
" cutters, Holding of	13	31
" cutters, Inserted blade type of	13	16
" cutters, Inserted tooth type of	13	17
" cutters, Nicked teeth for	13	14
" cutters, Parallel	13	13
" cutters, Parts of	13	12
" cutters, Plane	13	11
" cutters, Plane	13	13
" cutters, Purpose of lubricating	14	1
" cutters, Reversible	13	12
" cutters, Side	13	18
" cutters, Single angle	13	23
" cutters, Threaded	13	19
" cutters, with helical cutting edges	13	12
" cutters, with straight cutting edges	13	12
" Cutting speeds for	13	40
" Definition of	13	1
" Direction of feed in	16	50

	Sec.	Page
Milling, Feeds for	13	42
" Form	13	2
" Holding work during	14	12
" Holding work on face plate during	15	12
" Index centers for	14	34
" Influence of spring of work on direction of feed in	16	52
" jig, Gib	15	17
" jigs, Holding work in	15	14
" jigs, Purpose of	15	14
" Limitations in errors in	14	10
" machine	13	1
" machine arbor	15	8
" machine, Boring in	16	76
" machine, Bracing of	16	63
" machine, Cam-cutting attachment for	16	46
" machine chuck	15	1
" machine clamps, Necessity for great rigidity in	14	13
" machine, Clamping work on, for grooving	14	23
" machine, Clamping work to	14	13
" machine, Construction of	13	4
" machine, Construction of vertical	14	20
" machine dog	14	45
" machine, Double-head	14	22
" machine, Drilling in	16	75
" machine, Essential parts of	13	4
" machine, Graduating in a	16	77
" machine, Holding work in chuck on	15	1
" machine, Holding work in vise on	14	26
" machine, Holding work on vertical	14	19
" machine, Lead of	16	25
" machine, Lincoln type of	14	26
" machine, Lining face plate on	15	12
" machine, Lining work on	14	18
" machine, Plain	14	15
" machine, Self-centering chuck for	15	2
Milling machine, Setting of	16	64
" machine, Setting tapered work in	14	47
" machine, Special uses of	16	75
" machine, Special vise for	14	34
" machine, Spiral index head for	14	37
" machine, Steady rest for	15	18
" machine table, Holding work on	14	13
" machine, Taper attachment for	14	43
" machine, Turning in a	16	76
" machine, Universal	13	3
" machine, Universal head for	14	36
" machine, Universal steady rest for	15	20
" machine, Universal vise for	14	28
" machine, Use of angle plates on	14	16
" machine vise, Setting the	14	29
" machine, Work done between centers on	14	37
" machines, Advantages of	13	9
" machines, Classification of	13	2
" machines, Comparison of	16	79
" machines, Multiple-spindle	13	3
" machines, Plane	13	2
" machines, Special	13	4
" machines, Vertical	13	3
" of spiral work	16	19
" operations, Classification of	13	1
" operations in boring mills	11	40
" Plane	13	1
" polygons	15	3
" Preparation of stock for	13	39
" Revolution marks in	16	62
" Rotary planer for	14	14
" Side	13	2
" Signs of excessive speed in	16	66
" slots	16	56
" Starting the cut in	16	61

	Sec.	Page
Milling tapered work between centers	14	39
" tapered work, Precautions in	14	44
" work, Chucks for	13	37
" work, Face plates for	13	37
" work, Lining centers for taper	14	46
" work, with hard surfaces	16	51
Mills, Gang	13	18
" gang, Arranging of	16	74
" Hollow	7	12
" Horizontal floor	11	36
" Inserted blade side	13	19
" Inserted tooth side	13	20
" Slotting with end	16	56
" Stem	13	25
" Straddle	13	18
" straddle, Adjusting, for width	16	74
Model piece, Setting taper by	3	38
Monitor lathes, Chasing threads in	7	23
" lathes, Universal	7	22
Morse taper	3	33
" taper for drill shanks	10	37
" taper shanks	12	30
" tapers	12	31
Motion, Quick return, for shaper	9	52
Multiple milling jigs	15	17
" spindle drilling machine	11	13
" spindle milling machine	13	3

N	Sec.	Page
Natural functions	16	37
Nicked teeth for milling cutters	13	14
Nurling tools	7	9
Nut arbors	6	47
" Opening lead during thread cutting	4	67

O	Sec.	Page
Oil for lubrication	14	2
Open-side planers	9	41
" side plate planer	9	62
Outer column radial drill	11	9
Ovals, Turning	6	53

P	Sec.	Page
Packing-block, Adjustable	14	25
" blocks	14	25
Pad, Center	7	42
Paper on face plate, Use of	4	11
" Use of, under work on planer	8	26
Parallel blocks	10	45
" milling cutters	13	13
" strips, Circular	12	18
" strips, Use of, in planer chucks	8	11
Parting tool, Bent	5	42
" tool for screw machine	7	10
" tool, Inserted blade	5	40
" tool, Use of	5	39
" tools	5	38
" tools, Special for screw machine	7	21
Pickling castings	13	40
Pin countersink	10	28
Pinning of files	7	43
Pins, Planer	8	18
Pipe taps, Drills for	12	35
Pitch, Effect of slight difference of	4	64
" of a milling cutter	13	12
" of spiral	16	20
" of a thread	4	30
" of thread, Error in	5	15
" of thread, Inaccuracies in	4	42
Plain cylindrical turning	3	11
Plane milling	13	1
" milling cutter	13	11
" milling cutters	13	13
" milling machines	13	2
" spiral	13	14
" surfacing on a planer	9	9
Planer, Action of	8	1
" bed	8	1
" bolts, Shapes of	8	16
" centers	8	23
" centers, Divisions obtainable with	8	24
" chuck	8	7
" chuck, False jaw for	8	9
" chuck, Setting work in	8	8
" chuck, Use of parallel strips in	8	11
" chucks, Special jaws for	8	13
" chucks, Truing of	8	13
" Clamping round work on	8	21
" Clamping work on by gluing	8	26
" Comparison of, with shaper	9	45
" cross-rail	8	1

	Sec.	Page
Planer cross-rails, Errors in..	9	25
" cut, Depth of.....	9	11
" cuts, Feeds for.....	9	11
" Cutting speed of.....	9	20
" Cutting T-slots on.....	9	19
" Down cuts on.....	9	13
" Erecting of a.....	9	24
" feed-motion, Action of	9	10
" feed-motion, Details of	9	10
" head graduations.....	9	17
" head, Setting of, at an angle.....	9	16
" head, Testing, for square work.....	9	15
" heads	8	1
" heads	8	6
" housings.....	8	1
" jacks.....	8	25
" Jacks for high work on	8	30
" Jigs for holding work on.....	8	29
" Method of driving.	8	3
" milling attachment....	16	48
" Names of parts of.....	8	1
" Open-side plate.... ...	9	62
" operations.....	9	9
" pins	8	18
" platen	8	1
" platen, Errors in.....	9	24
" Quick return for.....	8	4
" Rotary.....	14	14
" saddles	8	1
" Side cuts on.....	9	13
" Side tool for.....	9	4
" Spring of.....	9	25
" strips.	8	19
" Swinging head for.....	9	16
" tool, Underhung.....	9	7
" tools	9	1
" tools, Clamping	9	9
" tools, Cutting principle of.....	9	1
" tools, Gang....	9	5
" tools, Gauges for setting.....	9	34
" tools, Keenness of.....	9	2
" tools, Spring of.....	9	6
" tools, Strength of.....	9	2
" tools, Tool holders for	9	4
" Undercuts on.....	9	18
" Use of level in setting work on.....	8	28
" Variable-speed countershaft for.....	9	21
" work, Accuracy of.....	9	24
" work, Bent clamps for	8	16
Planer work, Bolts and clamps for.....	8	14
" work, Braces for high	8	30
" work, Errors caused in, by internal stresses.....	9	26
" work, Spring of, due to clamping.....	9	26
" work, Spring of, due to its weight.....	9	26
" work, U clamps for....	8	17
Planers, Open-side.....	9	41
" Size of.....	8	6
" Spiral-geared.....	8	3
" Spiral-geared.....	8	5
" Spur-geared	8	3
Planing bevels.....	9	16
" chilled iron.....	7	20
" chilled iron, Cutting speed for.....	7	22
" chilled iron, Depth of cut in.....	7	22
" chilled-iron dies	7	23
" curved surfaces.....	9	29
" dovetails.....	9	36
" links.....	9	30
" racks.....	18	19
" spirals.....	9	33
" the ways of lathes	9	39
" V's or guides.....	9	39
" work parallel.....	8	10
" work square	8	8
" work too long for the platen.....	9	28
" work too wide for the housings	9	28
Plate planer, Open-side.....	9	62
Platen	8	1
" Errors in planer.....	9	24
" Fastening the work to planer	8	7
Plates, Angle.....	8	24
" Angle.....	10	45
" face, Adjustable jaws for.....	4	8
" Special.....	10	46
Plug tap	4	46
Plugs, Screw	8	18
Pneumatic drills.....	11	18
Point of a thread.....	4	29
Pointing tool.....	7	8
Polished surface, Finishing a..	7	46
Polishing clamp.....	7	47
" Object of.....	7	42
" Speed for	7	45
" stick.....	7	45

	Sec.	Page
Polishing, Use of emery for....	7	45
Polygons, Milling	15	8
Poole, J. Morton, grinding machine....	7	19
Portable drills.....	11	17
" drills, Classes of.....	11	18
" machine tools, Heavy	11	21
Post drill	11	35
Power feeds for drilling, Advantages of.....	12	8
Precautions necessary in placing work on centers	8	18
Precision lathes.....	7	35
Preparation of stock for milling	13	39
Press, Arbor.....	6	42
Pressure of air for pneumatic drills.....	11	18
Principles of taper attachment	8	41
Profiling	13	2
Pulley lathe	7	40
Pulleys, Boring cone, in turret lathe	7	29
Pump cylinders, Fixture for boring duplex	12	15

Q	Sec.	Page
Quick-return motion for plane..	8	4
" return motion for shaper	9	52

R	Sec.	Page
Rack cutting on the shaper....	9	59
Racks, Cutting of, on a key-way cutter.....	9	80
Radial drill, Belt-driven	11	8
" drill, Feed for.....	11	8
" drill, Foot-plate for....	11	9
" drill, Gear-driven.....	11	9
" drill, Table for.....	11	9
" drill, Universal	11	11
" drill, Universal table for.....	11	11
" drill, with outer column	11	9
" drills.....	11	7
" facing.....	4	26
" facing, Cutting speeds for.....	4	28
" facing, Precautions in..	4	27
" facing, Tools used in...	4	27
Rake, Angle of.....	5	23
" Angle of, in lathe tools..	5	24
" Angle of, in planer tools	9	1
" Effect of height of tool on.....	5	28
" Effect of position of tool on	5	27
Rake, Side, for square-thread tool..... ...	5	4
" Side, of side tool.....	5	29
" Top, of threading tool ..	5	10
Ram of slotting machine, Setting of	9	70
" Shaper.....	9	47
" Spring of.....	9	60
Reamer	10	5
" and countersink, Combination.....	10	30
" Center	3	17
" Expansion	10	26
" for deep holes.....	4	17
Reamers.....	10	20
" Adjustable.....	10	25
" Care of.....	10	24
" Chucking.....	4	17
" Curved cutting faces for	10	21
" Depth of cut of.....	10	22
" Flat.	10	20
" Flat.....	4	15
" Fluted	4	16
" Fluted	10	20
" for brass.....	10	21
" Inserted blade.....	10	24
" Number of cutting edges for.....	10	21
" Purpose of.....	10	20
" Rose	4	16
" Rose.....	10	27
" roughing, Tapered..	10	23
" Rounded ends for...	10	22
" Shell.....	10	27
" Shell chucking.....	4	17
" Starting chucking true.....	4	19
" Taper.....	10	22
" Tapered ends for ...	10	22
" Tapered, for heavy duty	10	23
" with undercut faces	10	21
" Wood.....	4	16
Reaming.....	10	5
"	12	4
" Care necessary in....	12	5
" centers.....	3	16
" Machine.....	12	5
" Methods of.....	12	4
" tapers.....	4	25
Reeves' variable-speed countershaft	9	21
Resistance to cut.....	6	7
Rest, Compound, for boring tapers.....	4	25

	Sec.	Page
Rest, Plain lathe	3	21
" Rise-and-fall lathe	3	20
" Slide	3	2
" Use of compound	3	45
" Weighted lathe	3	21
Rests, Follower	7	49
Revolution marks in milling	16	62
" marks, Prevention of, by bracing	16	63
Right-handed thread	4	30
Rods, Drilling and boring locomotive connecting	12	17
Roll grooves, Allowance for hot iron in	7	16
Rolls, Chilled	7	9
" chilled, Holding of, in lathe	7	11
" Corrugating	7	20
" Grinding chilled	7	17
" Lathe for turning grooved	7	9
" Lathes for turning parallel	7	1
" Sand	7	9
" Semisteel	7	9
" Testing chilled, after grinding	7	20
" Tool for corrugating chilled	7	22
" Turning chilled-iron	7	1
" Turning parallel chilled-iron	7	1
" Turning tools for chilled	7	12
" Turning with concentric grooves	7	9
Root of a thread	4	29
Rose reamers	4	16
" reamers	10	27
Rotary planer	14	14
Roughing box tool	7	6
" cut	3	22
" cut with diamond-pointed tool	3	28
" cuts	5	26
" cuts	6	6
" cuts, Feeds for, on planer	9	11
" cuts in boring	4	13
" reamers, Tapered	10	23
" tools	5	34
" tools for planer, Forged	9	2
Round-nosed graver	5	48
" nosed tools	5	35
Routing	13	2

S	Sec.	Page
Saddle, Clamping work to shape	9	58
" Lathe	3	5
Saddles, Planer	8	1
Safety drilling and tapping device	10	41
Sand rolls	7	9
Saw, Slitting	13	11
Scraping edge, Drill with double	10	8
" edge of drill, Angle and length of	12	9
Screw arbor	13	34
" cutting	4	29
" cutting, Calculating compound gears for	4	58
" cutting, Errors in	6	30
" cutting, Special lathe for	4	67
" cutting, Stop for inside	5	13
" jacks	10	44
" machine, Automatic dies for	7	13
" machine chuck	7	3
" machine, Cross-slide tools for	7	9
" machine, Cross-slide tools for	7	14
" machine, Dieholders for	7	8
" machine, Dies for	7	8
" machine, Drilling in a	7	14
" machine, Names of parts of	7	3
" machine, Parting tool for	7	10
" machine, Setting up of	7	5
" machine, Tapping in a	7	14
" machine, Work of turret	7	5
" machines, Automatic	7	31
" machines, Hand	7	3
" machines, Special forming heads for	7	19
" machines, Special parting tools for	7	21
" machines, Spring dies for	7	13
" machines, Steady rest for	7	22
" plugs	8	18
" Returning a partially cut, to the lathe	4	65
" slotting cutter	13	11
" thread, Right-handed	4	30
" threads, Measuring	4	31
" threads, Methods of cutting	4	41

	Sec.	Page
Screw threads, Shape of	4	32
" threads, U. S. standard	5	2
Screws, Cutting internal	5	12
" Cutting, on the lathe	4	47
" Cutting without reversing lathe	4	67
Sector, Use of, on index plate	15	25
Self-hardening steel	5	33
" hardening steel, Relation of cutting speed to	6	8
Sellers inside calipers	4	13
" of tool, Proper, indicated by character of shaving	5	25
" standard thread	4	37
" the compound rest	3	46
" the side tool	3	20
" the tool for threading tapered work	5	15
" threading tool for V thread	4	60
" tools for brass work	5	30
" work in an independent chuck	4	4
Semisteel rolls	7	9
Sensitive drills	11	16
Setting a diamond-pointed tool	3	26
" a parting tool	5	39
" taper work in a milling machine	14	47
" the milling cutter	16	66
" the milling machine	16	64
" work in planer chuck	8	8
Shaft, Turning a crank	6	50
Shafting lathes	7	50
" Straightening	7	51
Shank, Drill	10	12
" Taper, for drills	10	18
Shanks, Drill	10	17
Shape of square thread	4	36
" of V thread	4	32
" of V thread	4	40
Shaper, Clamping work on	9	55
" Clamping work to the saddle of	9	50
" Comparison of, with planer	9	45
" Crank-driven	9	46
" Cutting a keyway on	9	56
" Cutting rack on	9	59
" Cutting speeds of	9	53
" Cutting to a shoulder on a	9	57
" Distinctive features of	9	45
" Draw-cut	9	61
" Geared	9	49
Shaper, Holding work on	9	54
" Influence of style of, on cutting speed	9	53
" operations	9	53
" Quick-return motion for	9	52
" ram	9	47
" ram, Spring of	9	60
" Range of utility of	9	55
" Special double-head	9	65
" Spring of work on	9	60
" Taking cut on	9	55
" tools	9	54
" Traveling-head	9	50
" vise	9	54
Shapers, Classes of	9	46
" Classes of, for special work	9	64
" Column	9	46
" for special work	9	64
" Special	9	61
Shaving	5	19
" as an indicator of efficiency of cutting tool	5	25
Shell chucking reamers	4	17
" mill arbor	13	34
" reamers	10	27
Shoulder, Milling against	16	59
Shrink fits	6	38
Side cam	16	45
" cuts on planer	9	13
" milling	13	2
" milling cutters	13	18
" mills, Inserted blade	13	19
" mills, Inserted tooth	13	20
" tool	8	19
" tool, Bent	5	42
" tool, Clearance angle for	5	29
" tool, Finishing cut with	3	23
" tool for planer	9	4
" tool, Grinding of	3	19
" tool, Roughing cut with	3	22
" tool, Setting the	3	20
Simple-geared lathe	4	51
" gearing for cutting spirals	16	27
" gearing for thread cutting, Calculating	4	52
" indexing	15	21
Sine	16	37
" Versed	16	37
Single thread	4	30
Slide rest	3	2
" rest, Hand	7	42
Sliding fits	6	33

	Sec.	Page
Slipping of work, Influence of, on direction of feed	16	54
" of work on face plate, Preventing of	4	11
" of work, Preventing of	8	26
Slitting saw	13	11
Slot drills	10	15
Slots, Cutting T, on the planer	9	19
" Milling of	16	56
Slotter bars with fixed tools	9	73
" bars with tool block	9	75
" Cutting gears on the	9	77
" operations	9	70
" Taking two cuts at once on	9	76
" tools	9	72
" work, Examples of	9	75
Slotting circular surfaces	9	71
" cutter, Screw	13	11
" cutters	13	22
" machine	9	68
" machine, Characteristic features of	9	68
" machine, Clamping work on	9	71
" machine, Setting the ram of	9	70
" machines, Setting of work on	9	70
" with end mills	16	56
Socket, drill, Key-grip	10	39
" drill, Pin-grip	10	37
" for drill, with setscrew	10	35
Sockets, Drill	10	37
" for taper-shank drills	10	36
Solid taper reamers	10	22
Special forming heads for screw machines	7	19
" shapers	9	61
" threads	5	4
" threading tool	5	17
Speed, Adjustment of, in milling	16	64
" and feed of drills	12	32
" Cutting	6	1
" Cutting for shaper	9	53
" cutting, Influence of style of shaper on	9	53
" Cutting of the planer	9	20
" cutting, Relation of self-hardening steel to	6	8
" Effect of kind of metal on cutting	6	3
" for polishing	7	45
" lathes	7	41
Speed, Limit of cutting	6	2
" of chilled rolls while grinding	7	19
" of lathe	3	7
" of work for filing in lathe	7	44
" Relation between cutting, and speed of work	6	1
" Signs of excessive, in milling	16	66
" Variable cutting, for drilling	11	1
Speeds, Bickford experimental	12	35
" cutting, Calculation of	6	11
" Cutting, for chilled-iron	7	8
" Cutting, for milling	13	40
" Cutting, of drills	12	33
" Cutting, of shaper	9	53
" cutting, Table of	13	45
" for radial facing, Cutting	4	28
Spherical bearings, Boring of	11	44
" surfaces, Turning of	12	27
Spiral, Conical	13	14
" Definition of	13	14
" Definition of	16	20
" drill	10	13
" geared planers	8	3
" geared planers	8	5
" grooves, Direction of rotation of work while cutting	16	35
" grooves, Production of, in chilled rolls	7	21
" head, Effect of rotating index dial on	16	3
" head for indexing	16	1
" head, gearing of, Improved	16	1
" heads, Calculating change gears for	16	25
" index head for milling machine	14	37
" Lead of	16	20
" Pitch of	16	20
" Plane	13	14
" work, Index head for	16	22
" work, Milling of	16	19
Spirals, Compound gearing for cutting	16	28
" Cutters for	16	32
" Generation of	16	19
" Planing	9	33
" Single gearing for cutting	16	27

	Sec.	Page
Splining jig	15	14
Spot facing	10	5
" facing	10	33
" facing, Cutters for	10	33
" facing the lower side of a flange	10	34
Spotting work for steady rest	7	48
Spring dies	7	13
" due to method of driving work	6	21
" of boring tools	5	32
" of lathe tool due to variations in depth of cut	6	19
" of lathe tools	6	16
" of planer tools	9	6
" of planer work due to clamping	9	26
" of planer work due to its weight	9	26
" of the boring bar	4	24
" of the planer	9	25
" of the shaper	9	60
" of the shaper ram	9	60
" of the work	6	20
" of tools	5	45
" of work caused by bent-tailed dog	6	21
" of work in boring	4	24
" of work in clamping	8	27
" of work on the shaper	9	60
Spur-geared planers	8	3
Square planing	8	8
" thread, Shape of	4	36
" thread tool, Side rake for	5	4
" threads, Cutting	5	4
Squaring the ends of work	3	18
" up work with the side tool	3	24
Standard tapers	3	33
Starting a drill	12	2
" a tool into cut	3	28
" the cut in milling	16	61
Steady rest for lathe work	7	47
" rest for milling machine	15	18
" rest for milling machine, Universal	15	20
" rest for screw machine	7	22
" rest, Limitations of	15	20
" rest, Spotting work for	7	48
" rest, Use of, in chucking	7	53
" rest, Use of, in turning large guns	7	54
Steel machinery, Cutting speed for	6	9
" Self-hardening	5	33
" Self-hardening, Relation of cutting speed to	6	8
" tool, Cutting speed for	6	9
Stem mills	13	25
Stock, Preparation of, for milling	13	39
Stop for inside screw cutting	5	13
" for threading tool	4	61
" gauge for screw machine	7	6
" pin for indexing mechanism	15	22
Straddle mills	13	18
" mills, Adjusting, for width	16	74
Straight drill shanks	10	17
" fluted drills	10	14
" tailed dog, Advantage of	6	23
Straightening lead screws	7	53
" machines	7	51
" small work	7	51
Strength of planer tools	9	2
" of tool, Effect of height on	5	29
Surface gauge, Centering	3	12
" gauge, Use of, in planing	8	11
Surfacing, Plane, on a planer	9	9
Swivel vise for milling machine	14	27

T

	Sec.	Page
Table, Boring-mill	11	26
" drill press, Rectilinear adjustment of	11	6
" for drill press	11	5
" for drilling machine, Adjustable	11	1
" for radial drill	11	9
" Securing work on drill-press	10	42
" Special extension arms for boring-mill	12	25
" Universal, for radial-drill	11	11
Tables for fractional indexing	16	16
" Index	15	26
Tail-stock, Construction of	3	34
" stock, Error in pitch of thread from setting over	5	15
" stock, Errors in taper of thread due to setting over of	6	31

	Sec.	Page
Tail-stock of a lathe	8	10
" stock, Setting over of, for turning tapers	8	34
Tangent	16	37
Tap, Bottoming	4	46
" Bottoming	10	35
" drill for V thread, Rule for diameter of	4	38
" drills	12	34
" Effect of using a dull	4	63
" holes, Advantage of large	4	64
" holes, Size of	12	6
" Plug	4	46
" Plug	10	34
" Taper	4	46
" Taper	10	34
Taper, Adjusting attachments for	8	43
" Amount of set over in tail-stock for	8	35
" Amount of, possible to turn	8	41
" attachment, Advantages of	8	44
" attachment, Description of	8	42
" attachment for boring tapers	4	25
" attachment for milling machine	14	43
" attachments, Principles of	8	41
" Brown & Sharpe	8	33
" Expressing of	8	32
" Fitting a	8	49
" Morse	8	33
" Morse, for drill shanks	10	37
" reamers	10	22
" reamers for heavy duty	10	23
" Setting, by model piece	8	38
" Setting, by turning parallel to two diameters	8	38
" Setting for, by notches	8	36
" shank drills, Sockets for	10	36
" shank for drills	10	18
" shanks, Morse	12	30
" tap	4	46
" Testing a	8	49
" threads, Cutting	6	31
" turning	8	32
" turning by the use of two feed-motions	8	47
" turning lathe, Special	8	45
" turning, Position of tool in	8	47
Taper, Turning with compound rest	8	45
" work between milling centers	14	39
Tapers, Boring	4	25
" Caliper tool for setting	8	37
" Influence of depth of center hole on	3	40
" Influence of length of work on	8	40
" Methods of turning	8	34
" Morse	12	31
" Objections to turning, by setting over centers	8	39
" Reaming	4	23
" Standard	8	32
" Turning, by setting over the tail-stock	8	34
Tapered reamers, Roughing	10	23
" work, Lining centers for	14	46
" work, Precautions in milling	14	44
" work, Setting of, in milling machine	14	47
" work, Threading	5	15
Tapping	10	6
"	12	5
" a hole by hand	4	46
" by machine	4	46
" chucks, Automatic reverse	10	42
" device, Safety	10	41
" in a screw machine	7	14
" Speed of spindle in	12	6
Taps	10	34
" Drills for pipe	12	35
" Forms of	12	5
" Hand	4	46
" Use of	4	45
Teat drills	10	15
Teeth for milling cutters	13	14
" Nicked, for milling cutters	13	14
Testing a taper	8	49
" chilled rolls after grinding	7	20
" inside threads	5	13
" planer head for square work	9	15
Tests of twist drills, Recent	12	35
Theory of cutting tools	5	19
Thread, Acme	5	6
" British standard	4	36
" British standard	4	40

	Sec.	Page
Thread cutting, Calculating simple gearing for..	4	52
" Cutting double.....	5	11
" cutting, Hand dies for	4	42
" cutting, Precautions in	4	65
" cutting, Spring of tool in	5	7
" Cutting triple.....	5	11
" Diameter of bottom of V	4	33
" Double.....	4	30
" Drunken.....	6	31
" Effect of difference in pitch on the.....	4	64
" Error in pitch of	5	15
" External.....	4	41
" Female.....	4	41
" Fitting a V.....	4	62
" Franklin Institute standard.....	4	37
" gauge.....	4	60
" gauge, U. S. standard	5	1
" Inaccuracies of pitch of	4	42
" Internal	4	41
" Left-handed..... ...	4	30
" Male..	4	41
" Operation of cutting a	4	61
" Pitch of a	4	30
" Proportions of U. S. standard.....	5	2
" Returning a partially cut to the lathe.....	4	65
" Right-handed.....	4	30
" Rule for diameter of bottom of U. S. standard.....	4	34
" Sellers' standard.....	4	37
" Shape of screw.....	4	32
" Shape of square.....	4	36
" Shape of U. S. standard.....	4	34
" Sharpe or V.....	4	40
" Single.....	4	30
" Special.....	5	4
" Square, side rake for tool.....	5	4
" Table of proportions of U. S. standard....	4	39
" Tool for cutting U. S. standard.....	5	1
" Triple.....	4	30
" U. S. standard.....	4	36
" U. S. standard, Formal adoption of.....	4	39
" Whitworth	4	40
Thread, Whitworth standard..	4	36
Threaded milling cutters.....	13	19
Threading, Opening the lead nut during.....	4	66
" tapered work	5	15
" tool, Correct height for	5	8
" tool, Effect of using a dull....	4	68
" tool for V-thread..	4	59
" tool for V-thread, Grinding	4	60
" tool, Incorrect height for.....	5	9
" tool, Resetting....	4	66
" tool, Setting the...	4	60
" tool, Special.... ..	5	17
" tool, Stop for.....	4	61
" tool, Top rake of..	5	10
" tools	5	40
Threads, Advantage of using same lathe in fitting	4	65
" Bolt cutters for.....	4	43
" Calipering.....	4	62
" Cause of tool breaking in cutting.....	5	8
" Chasing in monitor lathes	7	23
" Cutting British standard.....	5	3
" Cutting by hand.....	4	41
" Cutting fractional...	4	53
" Cutting in a compound-geared lathe	4	54
" Cutting square.....	5	4
" Cutting taper.....	6	31
" Cutting U. S. standard.....	5	3
" Cutting without reversing lathe	4	67
" Measuring screw ...	4	31
" Methods of cutting..	4	41
" Special lathe for cutting	4	67
" Testing inside.....	5	13
" Tool for British standard	5	3
Toe dogs.....	8	20
Tool, Adjustments for height of.....	3	21
" Adjusting the diamond-pointed.....	3	31
" Bent parting	5	42
" Bent round-nosed.....	5	42
" Bent side.....	5	42

	Sec.	Page
Tool block, Setting of, for down cut	9	14
" Boring	4	18
" Caliper	3	37
" Cause of breaking of thread	5	8
" Clam-shell	9	3
" Clearance angle of side	5	29
" Correct height for threading	5	8
" Counterbore with changeable	10	31
" Cutting off	5	38
" Diamond-pointed	3	24
" Diamond-pointed	5	33
" Diamond-pointed, Grinding a	3	25
" Diamond-pointed, Setting a	3	26
" Direction of feed of, in side cuts	9	13
" Effect of character of metal on shape of	5	25
" Effect of hardness of metal on shape of	5	25
" Effect of height of, on rake and clearance	5	28
" Effect of height on strength of	5	29
" Effect of using a dull threading	4	63
" Errors in work due to wear of	6	30
" Finishing box	7	7
" Finishing cuts with diamond-pointed	3	30
" for corrugating chilled rolls	7	22
" for cutting British standard threads	5	3
" for cutting internal screws	5	12
" for cutting square threads	5	4
" for cutting U. S. standard threads	5	1
" for inside thread cutting, Moving from work	5	13
" for V thread	4	59
" for V thread, Grinding	4	60
" Forged finishing for planer	9	3
" Front	3	24
" Gooseneck	5	45
" grinders	5	49
" Height of in turning	3	26
Tool holders	5	37
" holders, Advantages of	5	37
" holders, Disadvantages of	5	37
" holders for planer tools	9	4
" Hubbing	12	25
" Incorrect height for threading	5	9
" Inserted-blade parting	5	40
" knife	3	19
" Manner of presenting to work	5	27
" Nurling	7	9
" Parting	5	38
" Parting for screw-machine	7	10
" Pointing	7	8
" Position of, in taper turning	3	47
" Position of lathe	6	17
" post for lathe	3	11
" post, Precautions in placing tool in	3	28
" Resetting threading	4	66
" Roughing box	7	6
" Roughing cut with side	3	22
" Round-nosed hand	5	48
" Setting of, for side cuts on planer	9	13
" Setting the side	3	20
" Setting threading	4	60
" Shape of boring	4	24
" Side	3	19
" side, Finishing cut with	3	23
" Side, for planer	9	4
" Side rake for square-thread	5	4
" Spring of, due to variations in depth of cut	6	19
" Spring of, in thread cutting	5	7
" Starting a, into a cut	3	28
" steel, Cutting speed for	6	9
" Stop for threading	4	61
" Top rake of threading	5	10
" Turning by means of a rotating	7	55
" Use of parting	5	39
" Underhung planer	9	7
Tools, Bent	5	41
" Boring	5	31
" Boring	5	42
" boring, Holders for	5	42
" Chucking	4	14
" Chucking	7	25

	Sec.	Page
Tools, Circular forming for screw machine	7	15
" Conditions governing shape of	5	25
" Control of cutting on boring mill	11	24
" Cross-slide for screw machine	7	9
" Cross-slide for screw machine	7	14
" Cutting off, for chilled iron	7	6
" Devices for holding drilling	10	35
" Drilling	10	6
" for brass	5	48
" for brass work	5	30
" for chilled iron, Grinding of	7	5
" for finishing cut in cylinder boring	11	41
" for turning chilled rolls, Clamping of	7	15
" for turning chilled rolls, Holding of	7	15
" Forged roughing, for planer	9	2
" Forged turning	5	33
" Forms of cutting	5	33
" Forming	5	44
" Gang planer	9	5
" Gauges for setting planer	9	34
" Grooving, for chilled rolls	7	13
" Hand	5	47
" Heavy portable machine	11	21
" Height of boring	5	32
" Holding, for chilled iron	7	7
" lathe, Angles of rake and keenness of	5	24
" Machine-ground	5	49
" Planer	9	1
" Preventing chattering in forming	7	19
" Roughing	5	34
" Round-nosed	5	35
" Setting of, in horizontal boring machine	11	34
" Shaper	9	54
" Side rake of side	5	29
" Slotter	9	72
" Special forming blades for	7	20
Tools, Special forms of finishing	9	8
" Special parting for screw machine	7	21
" Special threading	5	17
" Spring of	5	45
" Spring of boring	5	32
" Spring of lathe	6	16
" Spring of planer	9	6
" Straight-faced forming, for screw machine	7	17
" Theory of cutting	5	19
" Threading	5	40
" Turning, for chilled iron	7	4
" Turning, for chilled rolls	7	12
" used in radial facing	4	27
" Vertical slide forming	7	17
Toolmakers' lathe	7	32
Traveling head-shaper	9	50
Trepanning drill	12	24
Triple thread	4	30
" thread, Cutting	5	11
Truing a planer platen, Number of cuts necessary for	9	24
Trunnion supports for work while drilling	12	23
Turned drills	4	16
Turning a crank-shaft	6	50
" and boring operations	11	27
" balls	6	50
" by means of a rotating tool	7	55
" cam	6	51
" chilled rolls with concentric grooves	7	9
" in a milling machine	16	76
" mill	11	23
" ovals	6	53
" Plain cylindrical	8	11
" spherical surfaces	12	27
" tapers	3	32
" tapers, Methods of	8	34
" to a diameter	8	24
" tools for chilled iron	7	4
" tools for chilled rolls	7	12
" tools, Holders for	5	37
Turret, Action of	7	1
" applied to engine lathes	7	24
" lathe, Boring cone pulleys in	7	29
" lathe, Characteristic features of	7	1
" lathe for heavy work	7	25

	Sec.	Page
Turret lathe for large bar work	7	29
" lathe with flat turret	7	29
" lathes	7	1
" lathes, Special forms of	7	24
" lathes, Types of	7	3
" screw machine, Setting up	7	5
" screw machine, Work of	7	5
" work, Steady rest for	7	22
Twist-drill grinding machine	12	10
" drill, Precautions in grinding	10	14
" drills	10	18
" drills for pipe taps	12	35
" drills, Form of clearance face of	12	11
" drills, Recent test of	12	35
" drill, Starting a	4	19
Twisted flat drills	10	18
Two-spindle lathes	7	35

U	Sec.	Page
U clamps	10	44
U clamps	8	17
Undercut faces for reamers	10	21
Undercuts on planer	9	18
Undercutting of end mill	16	60
Underhung planer tools	9	7
Universal chucks	4	2
" milling machine	13	8
" radial drill	11	11
" steady rest for milling machine	15	20
" table for radial drill	11	11
" vise for milling machine	14	28
U. S. standard thread	4	36
" standard thread, Formal adoption of	4	39
" standard thread gauge	5	1
" standard thread, Origin of	4	36
" standard thread, Proportions of	4	39
" standard thread, Proportions of	5	2
" standard thread, Rule for bottom diameter of	4	35
" standard thread, Shape of	4	34
" standard thread, Tool for cutting	5	1
" standard threads, Cutting	5	3

V	Sec.	Page
Variable speed countershaft for planer	9	21
V blocks	8	23
V blocks	10	45
Versed sine	16	37
Vertical boring bar	11	44
" boring machine	11	23
" cylinder boring machine	11	43
" flange drilling machine	11	15
" milling attachment	16	43
" milling machine, Construction of	14	20
" milling machine, Holding work on	14	19
" milling machines	13	3
Vibration, Effect of, on milling arbors	13	35
Vise chuck, Split	14	33
" drill press	10	46
" False jaws for	14	29
" Holding round work in	14	32
" Holding work in, on milling machine	14	26
" Setting the milling machine	14	29
" Shaper	9	54
" Special	14	34
" Swivel, for milling machine	14	27
" Universal drilling	10	46
" Universal, for milling machine	14	28

W	Sec.	Page
Wood reamers	4	16
Work, Accuracy of planer	9	24
" Adjusting, on the table of the drill press	12	2
" Calipering	3	32
" Care in setting, on planer	8	28
" Cat head for	7	48
" Clamping heavy, on planer	8	33
" Clamping of, for grooving on milling machine	14	23
" Clamping of, on rotary planer	14	15
" Clamping of, on shaper	9	55
" Clamping of, on slotting machine	9	71
" Clamping of, to shaper saddle	9	58

	Sec.	Page
Work, Clamping round, on planer	8	21
" Clamping, to face plate	4	10
" Counterbore for light	10	31
" Direction of rotation of, while cutting spiral grooves	16	35
" done between centers on a milling machine	14	37
" Double face plate for supporting	12	22
" Driving, by straight-tailed dog	6	23
" Driving from center	7	39
" Examples of slotter	9	75
" Facing revolving	4	26
" Facing stationary	4	28
" Fastening, to planer platen	8	7
" Fixtures for supporting and rotating	12	19
" Grooving of, while held in chuck	15	2
" Heavy centers for supporting	12	21
" Holding, between centers	3	18
" Holding, during milling	14	12
" Holding, in chuck on milling machine	15	1
" Holding in chucks	4	1
" Holding, in milling jigs	15	14
" Holding of chilled rolls in lathe	7	11
" Holding of, on milling-machine table	14	13
" Holding of, on shaper	9	54
" Holding, on face plate while milling	15	12
" Holding on vertical milling machine	14	19
" Holding parallel chilled rolls in lathe	7	3
" Holding round, in milling-machine vise	14	32
" Holding stationary, for facing	4	28
" Influence of diameter of, on resistance to cut	6	7
" Influence of length of, on taper	3	40
" Influence of spring of, on direction of feed	16	52
" Jacks or braces for high	8	30
Work, Jigs for holding, on planer	8	29
" Laying out of, for drilling	12	1
" Lining centers for tapered	14	46
" Lining of, on milling machine	14	18
" Lining of, on milling machine	14	21
" Lining of, on rotary planer	14	15
" Manner of presenting tool to	5	27
" Milling circular, in chuck	15	5
" on arbors, Driving	6	43
" Packing under	8	27
" Preventing of slipping of, on planer	8	26
" Protection of edge of, from chipping	9	13
" Relation between cutting speed and speed of	6	1
" Resetting, on planer	8	28
" Roller supports for	12	20
" Securing, on the table of a drill press	10	42
" Selection of chuck for	4	4
" Setting and fastening, in horizontal boring mill	11	39
" Setting of, in boring mill	11	27
" Setting of, in horizontal drilling and boring machine	11	34
" Setting of, in planer chuck	8	8
" Setting of, on slotting machine	9	70
" Setting tapered, in a milling machine	14	47
" Shapers for special	9	64
" slipping of, Influence of, on direction of feed	16	54
" Spotting of, for steady rest	7	48
" Spring due to method of driving	6	21
" Spring of	6	20
" Spring of, caused by bent-tailed dog	6	21
" Spring of, in boring	4	24
" Spring of, in chucking	4	6

	Sec.	Page
Work, Spring of, in clamping	8	27
" Spring of, in shaper	9	60
" Spring of planer due to clamping	9	26
" Squaring the ends of	3	18
" Straightening small	7	51
" Tapered, between milling centers	14	39
Work, too long for the planer platen, Planing	9	28
" too wide for the housings, Planing of	9	28
" Trunnion supports for	12	23
" Use of level in setting, on planer	8	28
" V supports for	12	19
Wrought iron, Cutting speed for	6	9